Checked 29/12/11 RMS

CITROEN

SPARE PARTS CATALOGUE

MECHANICAL AND BODY

ID 19

AMBULANCE-BREAK (SAFARI)-COMMERCIAL-FAMILY TYPE

1959 to 1963 MODELS

JUNE 1963 EDITION

No. 479

CITROEN CARS LIMITED
TRADING ESTATE SLOUGH BUCKS
ENGLAND

Telephone - Slough 23811 (10 lines)

Telegrams - Citroworks - Slough

PREFACE

This catalogue consists of illustrations and descriptions of the mechanical and body parts for the ID 19 Ambulance-Break (Safari)-Commercial and Family Type Models 1959 to 1963.

(a) Arrangement. The binding is of a type which allows easy replacement of the pages when any considerable changes are made.

(b) Classification and names. The parts are classified by units or groups. They are grouped, in the illustration, in the order in which they are assembled; in the text, on the opposite page, they are arranged in numerical order.

Finding a part number is thus made easy and rapid; when the length of the text requires the use of several pages, the illustration is repeated as often as needed.

We have added to the description of certain parts, dimensions and particulars which assist in quicker identification. These dimensions are given for identification only, and are subject to modification as may become necessary.

The number of each part used in a unit or sub-assembly is shown in the "Number off" column.

(c) Reading the Catalogue. Consult the body and chassis type symbols (Page V) in order to identify the type of chassis and body. Consult the Index (pp VI to IX) which refers to the text and illustrations. Look for the part in the illustration on which the number is shown, look up this number on the text page and read the description there; should a part have several numbers on the illustration, look up these numbers on the text page to ensure successful identification.

For parts not illustrated, and where there can be no difficulty in identifying them, look for the name and number directly in the text.

If it should happen that in some rare case you are not certain of being able to write out the order correctly, it is advisable to give us the chassis and engine numbers and the type of body.

The classification of the "Spare Parts" Department into Sections I, II, III and IV no longer applies to parts with numbers beginning with D, only, the classification "Section VI", however, still applies.

The parts in Section VI and D in the number, or with the old numbering, are incorporated, according to their purpose, in the chapters of the present catalogue but with the mention (Section VI) after the description.

Parts of the old series of numbering remain divided into sections indicated as (Section I), (Section II), (Section III), and (Section IV) after the part description.

(d) Placing Orders

1. Parts with numbers in the D series: Make out a separate order for -

- Parts in Section VI.
- Complete units, body, cylinder blocks.
- All other parts together in full numerical order.

Do the same for parts belonging to the DA, DB, DC, DF, DM, DS and DW series.

2. Parts with numbers belonging to the "General series": Make out a special order for each section (Section I), (Section II), (Section III), (Section IV), and (Section VI).

The orders for the "General series" made out in this way apply to parts for all vehicles indiscriminately.

Special order forms are available on application.

(e) Prices and conditions of sale. Prices are given in a separate list; they are subject to alteration without notice.

The conditions of sale are shown at the head of our price lists (spare parts, reconditioned units and standard exchanges).

NUMBERING OF PARTS

The new system of spare parts numbering which we adopted several years ago is that used for the ID 19 Ambulance, Break (Safari) Commercial and Family type, and each division of the catalogue begins with these parts. After them come parts common to this model and to others, these parts retaining their style of numbering.

METHOD

The number is composed of:

(a) One or more capital letters indicating the type of car.

(b) Two numbers of one to three figures separated by a hyphen.
Example: DS 331-1e. Gearbox and clutch casing.

The last figure may be followed by a small letter used to indicate a part which is the same (as regards its purpose) but not interchangeable because:

- it is asymmetrical (right or left hand part)
- the dimensions are different

COMPOSITION OF NUMBERS

The car is divided into nine main sections (units or unit assemblies serving the same purpose) designated by the first figure of the first number, namely:

1. Engine proper.
2. Engine (accessories connected with its purpose).
3. Transmission (clutch, gearbox, drive shafts and joints).
4. Connection with the ground (front and rear axles, brakes, steering).
5. Electrical, visibility, signalling.
6. Safety, comfort, tools.
7. Chassis, platform, hull.
8. Body fittings.
9. Upholstery, trimming.

These nine main sections are themselves divided into different groups represented by the second figure in the first number.

These groups, in turn, are divided into sub-groups indicated by the third figure in the first number.

Example: DM 331-0 Gearbox lid assembled with selector forks and rods.

CLASSIFICATION OF PARTS IN THE CATALOGUE

In all our printed matter we have adopted the following classification in principle:

1. Numerical, in conjunction with two numbers but governed by the first.
2. Alphabetical for the index letters (as prefix or suffix).

For concrete examples, see Index (pp X to XL).

CATALOGUE IN NUMERICAL ORDER

The parts to which this new system of numbering is applied are not included in our "Catalogue in numerical order".

To make it more easy to find a part whose number you know, we have compiled an Index (pp X to XL) in this catalogue which shows you the page on which the part concerned appears.

RECOMMENDATION

You should take great care to note exactly:

- The letters (capitals as prefix, small letters as suffix);
- The hyphen separating the two numbers.

The omission of one of these items when composing a number completely alters the meaning and you would thus risk making an error in writing out the number of a part and of being sent a part *entirely* different from the one wanted.

SYMBOLS USED

TO DESIGNATE CHASSIS AND BODY TYPES

SYMBOLS	GENERAL CHARACTERISTICS
TYPE ID 19 BREAK (SAFARI) LUXE	Engine : 4 cylinders 78 x 100, aluminium cylinder head. Clutch : single dry plate. Gearbox : 4 speeds. Steering : by rack and pinion (mechanical). or : power assisted rack and pinion (hydraulic). Brakes : Disc type on front wheels. Drum type on rear wheels. Suspension : hydro-pneumatic. Front track : 1, 500 m (4' 11"). Rear track : 1, 300 m (4' 3¼"). Wheels : 185 x 400. Body : bench type front seat, bench type rear seat folding flat, 2 occasional seats diagonally opposite facing sideways

SYMBOLS	GENERAL CHARACTERISTICS
TYPE ID 19 BREAK (SAFARI) CONFORT	Same characteristics as type Break (Safari) Luxe, except: Body : 2 front seats, fixed type rear bench seat, 2 occasional seats diagonally opposite, facing sideways.
TYPE ID 19 FAMILY TYPE LUXE	Same characteristics as type Break (Safari) except: Body : bench type front seat, fixed bench type rear seat, 3 occasional seats facing forwards.
TYPE ID 19 FAMILY TYPE CONFORT	Same characteristics as for type Family Type Luxe. Confort equipment.
TYPE ID 19 COMMERCIAL	Same characteristics as for type Break (Safari), except: Body : bench type front seat, bench type rear seat folding flat.
TYPE ID 19 AMBULANCE	Same characteristics as for type Break (Safari), except: Body : 2 front seats, 2 rear seats.

TABLE OF CONTENTS

		PAGE NUMBERS
WINGS FRONT		228 to 231
WINGS REAR		232 and 233
PETROL SYSTEM	Petrol pump	28 to 31
	Tank - pipes	28 to 31
GEARBOX	Gearbox complete	54 to 59
	Gearbox casing	54 to 59
	Gearbox lid	54 to 59
	Differential	68 and 69
	Forks and shafts	60 and 61
	Speedometer drive	54 to 59
	Pinions, shafts	62 to 67
	Gearbox suspension	20 and 21
BENCH SEATS FRONT AND REAR		274 to 276
BODY		215
PIPING	Brakes	136 and 137
	Suspension	132 to 135
BONNET		234 to 237

		PAGE NUMBERS
SAFETY HARNESS		271
HEATING AND VENTILATION		196 to 213
GEAR CHANGE CONTROLS	Left-hand steering	70 to 73
	Right-hand steering	74 to 77
MANUAL HEIGHT VARIATION CONTROL	Left-hand steering	138 and 139
	Right-hand steering	140 and 141
CUSHION REAR		276
DEMISTING		196 to 213
STARTER MOTOR		162 to 165
MECHANICAL STEERING	Levers and rods	100 and 101
	Relay housings	100 and 101
	Rack	92 and 93
	Wheel - bracket	88 and 89
HYDRAULIC STEERING	Levers and rods	102 and 103
	Relay housings	102 and 103
	Mechanical part	94 to 97
	Hydraulic part	98 and 99
	Wheel - bracket	90 and 91

TABLE OF CONTENTS

		PAGE NUMBERS
DYNAMO		154 to 161
EXHAUST		32 to 37
ELECTRICAL	Distributor	38 to 43
	Horns	179
	Battery	142 to 153
	Coils	38 to 43
	Cables, and electrical fittings	178 and 179
	Ignition system	38 to 43
	Ignition control	38 to 43
	Switches	142 to 153
	Starter motor	162 to 165
	Dynamo	154 to 161
	Interior lighting	166 to 177
	Direction indicators	166 to 177
	Rear lamp - stop - reflectors	166 to 177
	Headlamps	166 to 177
	Regulator	154 to 161
BODY UNITS	Front units	216 to 223
	Rear units	224 to 227
CLUTCH	Mechanism, plate, fork	52 and 53

		PAGE NUMBERS
AXLE, FRONT	Anti-roll bar	116 to 119
	Link arms - swivels - hubs	80 to 83
	Half axle complete	80 to 83
	Coupling levers	80 to 83
AXLE, REAR	Anti-roll bar	84 to 87
	Link arms complete	84 to 87
	Hubs - stub axles	84 to 87
WINDSCREEN WIPER		182 to 187
BRAKES	Brake unit, front	104 to 107
	Brake piping	136 and 137
	Hydraulic control	130 and 131
	Backplates, shoes, rear	108 and 109
	Brake drums, rear	84 to 87
	Hand brake	122 and 123
ROOF RACK		238 to 241
GLASSES	Quarter lights	224 to 227
	Windscreen	270
	Doors front and rear (side)	248 to 255
	Door rear (upper)	262 to 265
FINISHING TRIMMING	Trimming for front and rear doors	278
	Trimming for rear boot	280 to 283
	Trimming for dashframe	280 to 283
	Trimming for seats and squabs	277

TABLE OF CONTENTS

		PAGE NUMBERS
WINDSCREEN WASHER		142 to 153
WINDOW WINDER	Sealing strips	248 to 255
	Glasses, front and rear doors	248 to 255
	Window winder	248 to 255
ENGINE	Camshaft	18 and 19
	Connecting rods	16 and 17
	Carburettor	10 to 13
	Cylinder barrels	2 to 5
	Accelerator control. (Left-hand steering. Right-hand steering).	22 and 23 24 to 27
	Cylinder head	6 to 9
	Rockers	6 to 9
	Cylinder block	2 to 5
	Timing	17 and 18
	Air filter	14 and 15
	Engine complete	1
	Pistons	16 and 17
	Water pump	46 and 47
	Oil pump and oil circulation	44 and 45
	Valves	6 to 9
	Engine suspension	20 and 21
	Inlet and exhaust manifolds	10 to 13
	Fan	46 and 47
	Crankshaft	16 and 17
TOOLS		214

			PAGE NUMBERS
WINDSCREEN	Glass		270
	Sun visor		180
	Pressure pad		270
	Rear view mirror		180
BUMPERS	Bumpers, front		188 to 193
	Bumpers, rear		194 and 195
	Registration number plate, front		188 to 193
	Brackets		188 to 195
ROOF			238 to 241
PEDAL GEAR	Left-hand steering		124 and 125
	Right-hand steering		126 and 129
FACIA BOARD	Finishing surround	Left-hand steering	256
	Facia board		258 and 259
	Finishing surround	Right-hand steering	257
	Facia board		260 and 261
FLOORS, REAR	Cushion, rear		266 to 269
	Squab, rear		266 to 269
	Occasional seats		266 to 269

TABLE OF CONTENTS

		PAGE NUMBERS
DOORS	Side doors, front	242 to 245
	Side doors, rear	242 to 245
	Upper door, rear	262 to 265
	Lower door, rear	262 to 265
RADIO TELEPHONE		181
RADIATOR	Water piping - cowl	48 and 49
	Ventilation duct	50 and 51
WHEELS - Wheel accessories		214
LOCKS	Handles front and rear	246 to 247
	Locks front and rear	246 to 247
SEATS FRONT AND REAR		272 to 276
OCCASIONAL SEATS		276
SUSPENSION	Dampers, front	116 to 119
	Dampers, rear	120 and 121
	Protective plugs	134
	Suspension piping	132 to 135
	Regulator - Accumulator	110 to 113
	Cylinder, front - Corrector, front- Suspension sphere, front	116 to 119
	Cylinder, rear - Corrector, rear - Suspension sphere, rear	120 and 121
	Suspension pump	114 and 115
	Reservoir - Distribution block	110 to 113

	PAGE NUMBERS
INSTRUMENT BOARD	142 to 153
CARPETS, FRONT AND REAR	279
DRIVESHAFTS	78 and 79

INDEX

NUMBER	DESCRIPTION	Section	PAGE No.	REMARKS
DA 1-03	Engine		1	
DA 1-03a	Engine		-	
DF 1-03	Engine		-	
DF 1-03a	Engine		-	
DW 1-03a	Engine		-	
DB 8-05	Body		215	
DB 8-05a	Body		-	
DB 8-05f	Body		-	
DB 8-05g	Body		-	
DF 8-05	Body		-	
DF 8-05d	Body		-	
DF 8-09	Unit, rear		224	
DF 8-2	Panel		-	
DF 8-2a	Panel		-	
DM 8-98	Upper panel		216	
DM 8-98a	Upper panel		-	
DM 8-98c	Upper panel		216-220	
DM 8-98d	Upper panel		216	
DM 8-98e	Upper panel		220	
DF 33-0g	Gearbox		54	
DF 33-0h	Gearbox		-	
DW 33-0a	Gearbox		-	
DF 33-01e	Gearbox		-	
DF 33-01g	Gearbox		-	
DF 33-01h	Gearbox		-	
DW 33-01d	Gearbox		-	
DW 33-01g	Gearbox		-	
DF 41-03	Half-axle		81	
DF 41-03a	Half-axle		-	
DS 111-01	Set of barrels		2	
DS 111-01c	Set of barrels		-	
DS 111-3	Gasket	VI	-	
DM 112-01	Cylinder head		6	
DS 112-01a	Cylinder head		-	
DS 112-3a	Cylinder head gasket	VI	-	
DS 112-3b	Cylinder head gasket	VI	-	
D 112-4	Screw		-	
D 112-4a	Screw		-	
DS 112-4	Screw		-	
DM 112-87	Plate		-	
DM 112-88	Joint		6-197-201-206	
DS 112-91	Joint		6	
DS 112-91a	Joint		-	
DS 112-92	Cup	VI	6	
DS 112-92a	Washer	VI	-	
DS 113-02	Oil baffle		2	
D 113-11	Joint	VI	-	
D 113-12	Joint	VI	-	
DM 113-16	Half-bearing	VI	17	
DS 113-16b	Half-bearing	VI	-	
DM 113-17	Half-bearing	VI	-	
DS 113-17b	Half-bearing	VI	-	
DM 113-18	Half-bearing	VI	-	
DS 113-18	Half-bearing	VI	-	
DS 113-50	Tube		2	
DS 113-91a	Bearing ring	VI	17	
DS 113-91b	Bearing ring	VI	-	
DS 113-91c	Bearing ring	VI	-	
D 113-97	Oil retaining plate		2	
D 113-98	Screw		-	
DM 114-5	Cylinder block		-	
DM 114-5a	Cylinder block		-	
DF 114-85	Joint	VI	-	
DF 114-86	Plate		-	
DS 121-04t	Crankshaft		17	
DS 121-04v	Crankshaft		-	
DS 121-05	Flywheel		-	
DM 121-010	Connecting rod		-	
D 121-2c	Bush	VI	-	
D 121-2d	Bush	VI	-	
D 121-6	Piston ring		-	
DS 121-6a	Piston ring	VI	-	
DS 121-7	Piston ring		-	
DM 121-9	Half-bearing	VI	-	
DM 121-9a	Half-bearing	VI	-	
DS 121-10	Nut		-	
DS 121-13	Screw		-	
DS 121-15	Scraper ring		-	
DS 121-88	Plug	VI	-	
D 121-92a	Screw		-	
DS 121-92	Screw		-	
D 121-98	Dowel pin	VI	-	
DS 121-99a	Washer		-	
DM 123-0	Camshaft		18	
DM 123-0a	Camshaft		-	
DS 124-1	Tappet		-	

NUMBER	DESCRIPTION	Section	PAGE No.	REMARKS
DS 124-2	Rocker		6	
DS 124-2a	Rocker		-	
DS 124-3	Valve guide		-	
DS 124-3a	Valve guide		-	
DS 124-5d	Push rod		18	
DS 124-5e	Push rod		-	
DS 124-6	Rockershaft		6	
DS 124-7	Valve		-	
DS 124-8a	Valve		-	
DS 124-9	Spring		-	
DS 124-11	Cup		-	
DS 124-17	Bracket		-	
DS 124-17a	Bracket		-	
DS 124-20b	Rocker		-	
DS 124-20c	Rocker		-	
DS 124-21a	Rockershaft		-	
DS 124-22	Bracket		-	
DS 124-22a	Bracket		-	
DS 124-23	Bracket		-	
DS 124-23a	Bracket		-	
DS 124-25	Spring		-	
DS 124-26	Cup	VI	-	
DS 124-27	Cup	VI	-	
DS 124-78	Cap	VI	-	
DS 124-80	Spring		-	
D 124-85	Washer		-	
DS 124-85	Washer		-	
DS 124-95	Cap	VI	-	
DS 124-97	Washer	VI	-	
DS 124-98	Spring		-	
DS 126-1	Damper	VI	17	
D 131-1	Timing cover		2	
DS 131-1a	Timing cover		-	
DS 131-10	Washer		17	
DS 132-01	Breather		2	
DM 132-2a	Cylinder head cover		6	
DM 132-2b	Cylinder head cover		-	
DS 132-2	Cylinder head cover		-	
DS 132-2a	Cylinder head cover		-	
DS 132-2b	Cylinder head cover		9	
DS 132-4	Joint		-	
DS 132-4a	Joint		-	
D 132-9b	Joint	VI	2	
D 132-9c	Joint	VI	-	
D 132-9d	Joint	VI	-	
DS 132-10	Breather	VI	-	
DS 132-71a	Stud		9	
DS 132-77	Distance piece		-	
DS 132-81	Plug	VI	-	

NUMBER	DESCRIPTION	Section	PAGE No.	REMARKS
D 132-98	Sump		2	
DS 133-3	Crossmember		21	
DF 133-5	Flexible block		-	
DS 133-5b	Flexible block		-	
D 133-11a	Crossmember		-	
D 133-12a	Bracket		-	
D 133-14	Rubber bearing		-	
D 133-50	Half bearing		-	
D 133-58	Packing piece		-	
D 133-58a	Packing piece		-	
D 133-59	Half bearing		-	
D 133-60a	Bearing cap		-	
DS 133-66	Nut		-	
DS 133-74a	Bracket		-	
DS 133-74c	Bracket		-	
DS 133-75a	Bracket		-	
DS 133-75c	Bracket		-	
DS 133-90	Bracket		-	
DS 133-90a	Bracket		-	
DS 133-91	Bracket		-	
DS 133-91a	Bracket		-	
DF 133-97	Shield	VI	-	
D 133-102	Bush		-	
D 133-107	Washer		-	
DM 133-116	Bracket		-	
D 133-117a	Housing		-	
D 133-118	Thrust block		-	
D 133-136	Packing piece		-	
DS 133-139	Plate		-	
DM 141-11	Joint	VI	10	
DS 141-11b	Joint	VI	-	
DF 141-13	Housing		-	
DS 141-13a	Housing		-	
DM 141-78	Distance piece		-	
DS 141-88	Drain tube		-	
DM 141-95	Plate		-	
DM 141-97	Joint	VI	-	
DF 141-98	Union		10-46	
DS 141-99	Drain tube		10	
DS 141-99a	Drain tube		-	
DF 142-1	Pedal		22	
DS 142-1	Pedal		-	
DS 142-1a	Pedal		-	
DF 142-4	Pedal		25	
DF 142-5	Spring		22	
DM 142-5a	Spring		25	
DM 142-5b	Spring		-	
DS 142-5a	Spring		22-26	
DS 142-6	Bearing		22	

NUMBER	DESCRIPTION	Section	PAGE No.	REMARKS
DS 142-6a	Bearing		22	
DS 142-7a	Lever		-	
DM 142-10a	Bearing		26	
DM 142-11e	Pedal	VI	-	
DM 142-13a	Lever	VI	-	
DM 142-13b	Lever	VI	-	
DS 142-24	Manifold		10	
DF 142-25	Flexible tube		-	
DM 142-30b	Cable	VI	25	
DM 142-30c	Cable	VI	-	
DS 142-54	Cup		10	
DF 142-56	Bracket		22-26	
DS 142-56a	Bracket		- -	
DM 142-65	Washer	VI	25	
DM 142-65a	Plate		26	
DF 142-67	Support	VI	25	
DM 142-70a	Bearing	VI	26	
DF 142-80	Rod		22	
DS 142-80c	Rod		22-26	
DM 142-82	Spindle		25	
DM 142-85	Bush	VI	-	
DS 142-90	Sleeve		22	
DS 142-95	Ring seal	VI	130	
DS 142-98c	Distance piece	VI	10	
DF 142-99	Relay		22	
DF 142-99a	Relay		22-26	
DW 142-99	Relay		- -	
DM 142-102	Washer	VI	25	
DS 142-106	Union		10	
DS 142-109	Ball pin		22-26	
DS 142-112a	Nut		- -	
DF 142-115	Plate		22	
DM 142-116	Washer	VI	25	
DS 142-116a	Washer		22-26	
DS 142-118	Bush		- -	
DM 142-121	Rod	VI	26	
DM 142-137a	Bracket	VI	-	
DM 142-145	Plate		-	
DM 142-151	Spring	VI	25	
DM 142-154a	Sheath	VI	-	
DM 142-160c	Flexible thrust block		-	
DM 142-163d	Housing		-	
DM 142-166a	Thrust sleeve	VI	-	
DM 142-168	Thrust sleeve	VI	-	
DM 142-189	Roller	VI	-	
DM 171-0g	Element	VI	14	
DS 171-0a	Element	VI	-	
DS 171-0b	Element	VI	-	
DS 171-0c	Element	VI	-	
DM 171-3	Hose connection		14	
DM 171-3a	Hose connection		-	
DS 171-3a	Hose connection	VI	-	
DM 171-4	Hose connection	VI	-	
DS 171-5	Element	VI	-	
DS 171-5a	Element	VI	-	
DS 171-5b	Element	VI	-	
DS 171-5c	Element	VI	-	
DM 171-10	Cup	VI	-	
DM 171-56a	Support	VI	-	
DS 171-60	Clip	VI	-	
DM 171-61	Rubber retainer	VI	-	
DM 171-62	Connecting liner		-	
DM 171-63	Packing		-	
DM 171-65	Support		-	
DS 171-72	Collar		-	
D 171-91	Rubber bush		-	
DS 171-96	Support		-	
D 173-0a	Petrol pump	VI	29	
DM 173-0a	Petrol pump	VI	-	
DM 173-0c	Petrol pump	VI	-	
DS 173-0	Petrol pump	VI	-	
DM 173-8	Diaphragm	VI	-	
DM 173-9	Joint	VI	-	
DS 173-9	Joint	VI	-	
D 174-3	Flexible tube	VI	-	
DF 174-3	Flexible tube	VI	-	
DS 174-7	Flexible tube		-	
DS 174-67	Shield		-	
D 174-72	Grommet		-	
D 174-73	Support		-	
D 174-75	Bush		-	
D 174-76	Clip		-	
D 174-77	Clip		-	
D 174-80	Support		-	
DM 174-81	Connecting tube		-	
D 174-82	Tube		-	
D 175-03	Cap	VI	-	
D 175-1	Tank	VI	-	
DF 175-1	Tank	VI	-	
DF 175-2a	Cover		232	
DB 175-4	Filter tube	VI	29	
DF 175-4	Filter tube	VI	-	
DF 175-5a	Rheostat	VI	-	
DS 175-5b	Rheostat	VI	-	
D 175-9a	Rubber connection		-	
DF 175-9	Rubber connection		-	
DM 175-13	Filter	VI	29-54	
DS 175-14a	Drain plug	VI	29	

NUMBER	DESCRIPTION	Section	PAGE No.	REMARKS
DB 175-16	Cover		224	
D 175-17	Sealing strip	VI	29	
D 175-18	Strap		-	
DF 175-18	Strap		-	
DM 175-53	Rubber packing		-	
D 175-54	Rubber packing		-	
DF 175-55	Strap		-	
D 175-60	Rubber packing	VI	-	
DS 175-63	Clip	VI	30	
D 175-66	Connecting sleeve		-	
D 175-67	Rubber strip		-	
DF 175-67	Rubber strip		-	
DS 175-68	Rubber sleeve		-	
D 175-72	Clip		-	
DS 175-75	Rubber sleeve		-	
D 175-80	Washer		-	
DS 175-81	Cup	VI	-	
DB 175-84	Tube	VI	-	
DF 175-84	Tube	VI	-	
DS 175-86a	Spring		232	
D 175-92	Rubber stop		232-262	
DM 175-103	Buckle		30	
D 175-108	Protecting strip		-	
DM 175-110	Bracket	VI	-	
DS 181-1a	Manifold		10	
DS 181-1b	Manifold		-	
DS 181-2	Joint	VI	-	
DS 181-4b	Bracket		-	
DS 181-4d	Bracket		-	
DS 181-5b	Bracket		-	
DS 181-5d	Bracket		-	
DS 181-6a	Shield	VI	-	
DS 181-6c	Shield		-	
DS 181-6d	Shield		-	
DS 181-8	Fixing plate		-	
DM 181-9a	Shield		-	
DS 181-9	Shield		-	
DM 181-10a	Bracket		-	
DM 181-11a	Bracket		-	
DS 181-14	Shield		-	
DS 181-75	Grommet	VI	-	
DS 181-77	Plate		-	
DS 181-87a	Closure plate		-	
DS 181-87b	Closure plate		-	
DM 182-3b	Tube	VI	33	
DM 182-3c	Tube	VI	-	
DS 182-3	Tube	VI	37	
DS 182-3a	Tube	VI	-	
DS 182-4	Tube	VI	-	

NUMBER	DESCRIPTION	Section	PAGE No.	REMARKS
D 182-6a	Half collar		33-37	
DM 182-7	Joint	VI	33	
DM 182-7a	Joint	VI	33-34	
DM 182-9b	Tube		34	
DM 182-10	Half collar		-	
DS 182-51	Pipe		37	
DM 182-53	Packing		33	
DS 182-54	Tube		-	
DS 182-54a	Tube	VI	37	
DS 182-62	Distance piece		33	
DM 182-64	Half collar		-	
DM 182-68	Bracket		-	
DS 182-68a	Bracket		-	
DM 182-69	Assembling flange		-	
DS 182-69	Clip		37	
DM 182-76	Half collar		33-34	
DS 182-76	Half collar		37	
DS 182-76a	Half collar		-	
DS 182-78	Clip		-	
DS 182-79	Half collar		33	
DS 182-79a	Support		37	
DS 182-80	Rubber strip		33-34-37	
DM 182-81	Support		34	
D 182-84	Clip		33-37	
DM 182-84	Clip		33	
D 182-85	Distance piece	VI	33-34-37	
DS 182-87	Thrust block		- - -	
DS 182-91	Screw		37	
DM 182-101	Clip		33	
DS 182-101	Clip		37	
DS 182-116	Plate		-	
DM 183-0	Silencer		33	
DS 183-0c	Silencer		37	
DS 183-45	Support		-	
DS 183-45a	Support		-	
DS 183-61	Shield		-	
DS 183-62	Shield		-	
DS 183-70	Clamp		33	
DS 183-70a	Clamp		37	
DS 183-70b	Plate		-	
DS 183-71	Spring		33	
DS 183-71a	Spring		37	
DS 183-71b	Spring		-	
DS 183-71c	Spring		-	
DS 183-72	Packing		-	
DS 183-72a	Packing		-	
D 183-83	Washer	VI	-	
D 183-93	Plate		33	
DS 183-93	Plate		37	

NUMBER	DESCRIPTION	Section	PAGE No.	REMARKS
DF 211-05	Distributor	VI	38-41	
DF 211-05a	Distributor	VI	- -	
DS 211-05b	Distributor	VI	41	
DS 211-05c	Distributor	VI	-	
DM 211-1	Control	VI	38-142	
DM 211-1a	Control	VI	38-150	
DM 211-8	Condenser	VI	38-41	
DS 211-10	Spring		38	
DW 211-10	Spring	VI	41	
DF 211-14	Tube	VI	38-41	
DM 211-15	Distributor head	VI	- -	
DM 211-15a	Distributor head	VI	- -	
DM 211-16	Rotor	VI	- -	
DM 211-16a	Rotor	VI	- -	
DM 211-17	Contact breaker	VI	- -	
DM 211-17a	Contact	VI	- -	
DS 211-17b	Contact breaker	VI	41	
DF 211-18	Suction unit	VI	38-41	
DF 211-18a	Suction unit	VI	- -	
DW 211-48	Trunnion	VI	41	
DW 211-49	Trunnion	VI	-	
DM 211-55	Union		38-41	
D 211-56	Bush		142-150	
DW 211-59	Rod	VI	41	
DM 211-60	Control lever		38	
DW 211-60	Control lever	VI	41	
DS 211-62	Bracket		38	
DW 211-62	Bracket	VI	41	
DM 212-08b	Coil	VI	38-41	
DM 212-08c	Coil	VI	- -	
DS 212-5a	Cable		38	
DS 212-5h	Cable	VI	41	
DS 212-6a	Cable		38	
DS 212-6h	Cable	VI	41	
DF 212-7a	Sparking plug	VI	-	
DS 212-7	Sparking plug	VI	38	
DS 212-7b	Sparking plug	VI	-	
DS 212-7d	Sparking plug	VI	41	
DS 212-7e	Sparking plug	VI	-	
DS 212-9	Cable		38	
DS 212-9e	Cable	VI	41	
DS 212-12a	Cable		38	
DS 212-12h	Cable	VI	41	
DS 212-13a	Cable		38	
DS 212-13h	Cable	VI	41	
DM 212-14a	Switch	VI	38-41-142-150	
DS 212-22	End piece	VI	38	
DF 212-52	Plate		38-41	
DS 212-54	End piece	VI	-	

NUMBER	DESCRIPTION	Section	PAGE No.	REMARKS
DS 212-55	End piece	VI	38	
DS 212-70a	Insulating sheath	VI	-	
DS 212-70b	Insulating sheath	VI	41	
DS 212-70c	Insulating sheath	VI	-	
DS 212-71	Plug	VI	38	
DS 212-71a	Terminal	VI	41	
DS 212-72a	Rod	VI	38	
DS 212-72b	Rod	VI	41	
DS 212-72e	Rod	VI	-	
DS 212-72f	Rod	VI	42	
DS 212-73a	Support		38-42	
DS 212-73d	Support		42	
DF 212-77a	Protecting sheath	VI	-	
DS 212-77	Protecting sheath	VI	38	
DS 212-79	Protecting sheath	VI	42	
DS 212-83	Screw	VI	-	
DS 212-113	Plug	VI	9-38	
DS 212-113a	Plug	VI	42	
DS 212-115a	Plug		38-41	
DS 212-116	Cap		38	
DS 221-1	Filler neck		9	
DS 221-83	Filter	VI	-	
DS 221-92	Joint	VI	-	
DS 221-96	Guide tube	VI	2	
D 222-01	Oil pump		45	
D 222-3	Pipe		-	
D 222-4	Pump body		-	
DS 222-5	Spring		-	
DS 222-11	Base		-	
DM 224-1	Pipe		-	
DS 224-1	Pipe		-	
DF 231-04	Water pump		46	
DF 231-1	Body		-	
DF 231-3	Shaft		-	
DM 231-4a	Pulley		-	
DF 231-5	Pulley		18	
DM 231-6	Belt	VI	46	
DS 231-6	Belt	VI	-	
DM 231-8	Shaft		18	
DS 231-8	Shaft		-	
DM 231-9	Cover		46	
DS 231-61	Screw		18	
DS 231-65	Cover		46	
D 231-76	Key	VI	18	
D 231-87	Joint	VI	46	
D 231-88	Joint	VI	-	
D 231-91	Washer		-	
DM 231-91	Washer		18	
DS 231-92	Washer		46	

NUMBER	DESCRIPTION	Section	PAGE No.	REMARKS
DS 231-92a	Washer		46	
DS 231-92b	Washer		-	
DS 231-92c	Washer		-	
D 231-93	Washer		18	
D 231-93a	Washer		-	
DS 231-100	Joint	VI	54	
D 232-03	Cap		49-50	
DM 232-8a	Blind	VI	49	
DM 232-9a	Control	VI	-	
DM 232-50	Shield		-	
DM 232-64	Protector	VI	-	
DM 232-65	Plate	VI	-	
DM 232-66	Bracket		-	
DS 232-75	Bracket	VI	-	
DF 232-78	Stay		-	
DF 232-78a	Stay		50	
DS 232-78a	Stay		49-50	
D 232-82	Packing		- -	
D 232-82a	Packing		- -	
D 232-96	Packing		- -	
D 234-01	Thermostat	VI	46-49-50	
DS 234-01	Thermostat	VI	- - -	
DM 235-1a	Pipe		49	
DM 235-1c	Pipe		49-50	
D 235-3	Connecting tube		- -	
D 235-4	Tube		- -	
DM 235-10a	Connecting tube		49	
DS 235-10	Connecting tube		49-50	
DM 235-11a	Connecting tube		- -	
DM 241-1	Fan		46	
DS 241-93	Screw	VI	-	
DS 242-1	Fan cowl	VI	49-50	
DM 242-2a	Deflector		49	
DS 242-45	Frame		50	
DS 242-46	Control	VI	-	
DS 242-47	Shutter		-	
DS 242-49	Frame		-	
DS 242-50	Frame		-	
DS 242-51	Strip			
DS 242-55	Joint	VI	-	
DS 242-87	Plate	VI	-	
DS 242-107	Screw	VI	-	
DS 242-108	Protector	VI	-	
DS 242-109	Support	VI	-	
DS 242-110	Bearing	VI	-	
D 251-1	Starting handle		214	
DS 251-2	Spindle		54-214	
DS 251-2a	Spindle		- -	
D 251-4a	Extension		214	
DS 251-4a	Extension		214	
DS 251-4c	Extension		-	
DS 251-75	Plug	VI	50-220	
D 312-0	Clutch mechanism	VI	53	
D 312-1	Carrier plate	VI	-	
D 312-2	Spring	VI	-	
D 312-2a	Spring	VI	-	
D 312-99	Cup	VI	-	
DW 313-01	Disc	VI	-	
DS 314-01	Housing		-	
DF 314-015	Pedal gear		125	
DF 314-015a	Pedal gear		-	
DF 314-016	Pedal gear		126	
DF 314-016a	Pedal gear		-	
DM 314-016	Pedal gear		129	
DF 314-2a	Cable	VI	125	
DM 314-2e	Cable	VI	-	
DF 314-3	Pedal		-	
DF 314-3a	Pedal		126	
DS 314-4	Fork		53	
D 314-6	Spring	VI	-	
D 314-9	Spring	VI	-	
DS 314-16	Spindle		-	
D 314-17	Nut		125-126-129	
DM 314-21	Push rod		125-126	
DM 314-21a	Push rod	VI	129	
DS 314-22	Plate		54	
DM 314-25	Bracket		126	
D 314-29	Sealing ring	VI	62	
D 314-32	Joint	VI	53	
DM 314-33	Lever		125	
DF 314-34	Spindle		-	
DF 314-34a	Spindle		-	
DF 314-36	Lever		126	
DF 314-36b	Lever		-	
DM 314-36a	Lever		129	
DM 314-36c	Lever		-	
DF 314-37	Spindle		126	
DF 314-37a	Spindle		-	
DM 314-38b	Pedal		129	
DM 314-39c	Cable	VI	126	
DM 314-39d	Cable	VI	129	
DM 314-39f	Cable	VI	-	
DF 314-40	Bracket		126	
DF 314-40a	Bracket		-	
DM 314-40	Bracket		129	
DF 314-48	Bracket		126	
DF 314-48a	Bracket		-	
DM 314-48	Bracket		129	

NUMBER	DESCRIPTION	Section	PAGE No.	REMARKS
DF 314-49	Bearing		125	
DF 314-51	Spring		-	
DF 314-51a	Spring		126	
DM 314-51d	Spring	VI	129	
DM 314-53	Bush		126	
DS 314-74	Tie-rod		114	
D 314-76	Guide		53	
D 314-77	Spring		-	
D 314-82	Nut		46	
DM 314-83b	Lever		129	
DM 314-88	Washer		125	
DM 314-88a	Washer		129	
DF 314-92a	Cable	VI	126	
DM 314-95a	Bush		125	
DM 314-95b	Bush		129	
D 314-99a	Hub		53	
DF 314-108	Distance sleeve		126	
DF 314-109	Distance sleeve		-	
DM 314-109	Distance sleeve		129	
D 314-140	Cup		46	
DF 314-158	Bracket		125	
DF 314-177	Screw		125-126	
DM 314-177	Screw		129	
DF 314-178	Spindle		125-129	
DF 314-179	Plate		125	
DF 314-180	Lining		-	
DM 331-0	Lid		54	
DM 331-0c	Lid		-	
DW 331-0a	Lid		-	
DM 331-03	Lid		-	
DM 331-03c	Lid		-	
DW 331-03a	Lid		-	
DM 331-04	Breather		-	
DF 331-1d	Housing		-	
DF 331-1e	Housing		-	
DM 331-1d	Housing		-	
DM 331-1e	Housing		-	
D 331-2a	Joint	VI	-	
D 331-3b	Bearing cap		57	
DS 331-3	Bearing cap		-	
D 331-6a	Drain pipe	VI	-	
D 331-7	Joint	VI	-	
DM 331-11	Lid		-	
DM 331-11a	Lid		-	
DM 331-11c	Lid		-	
DM 331-11d	Lid		-	
DW 331-11	Lid		-	
DW 331-11a	Lid		-	
DM 331-12	Plug		61	

NUMBER	DESCRIPTION	Section	PAGE No.	REMARKS
D 331-13b	Bearing cap		57	
D 331-63	Nut	VI	-	
D 331-77	Washer		-	
D 331-79	Joint	VI	78	
D 331-81	Screw		57	
DM 331-82	Breather	VI	-	
D 331-87	Stud		21-57	
DM 332-01a	Mainshaft		62	
D 332-2	Spindle		-	
DM 332-2	Spindle		-	
D 332-4	Nut		-	
D 332-84	Tab washer		-	
DS 332-91	Distance sleeve		-	
D 332-94	Screw		-	
D 332-95c	Adjusting washer		-	
D 332-95d	Adjusting washer		-	
DS 332-98	Dowel	VI	-	
D 332-300 to D 332-330	Adjusting washer		-	
D 333-7a	Pinion		-	
DM 333-8b	Pinion		-	
D 333-9	Pinion		-	
DW 333-9	Pinion		-	
D 333-12	Pinion		-	
D 333-13	Pinion		-	
DW 333-13	Pinion		-	
DM 333-14	Pinion		-	
DM 333-14a	Pinion		-	
D 333-15	Pinion		-	
DM 333-15	Pinion		-	
DW 333-15	Pinion		-	
DS 333-16	Gear train		65	
DW 333-16	Gear train		-	
DM 333-17a	Pinion		-	
DM 333-18	Pinion		-	
DM 333-18a	Pinion		-	
D 333-73	Distance bush	VI	-	
DM 333-73	Distance bush	VI	-	
D 333-74 to D 333-74d	Washer		-	
DM 333-74 to DM 333-74g	Washer	VI	-	
DM 333-80 to DM 333-80e	Washer		-	
D 333-81	Driving pin		-	

NUMBER	DESCRIPTION	Section	PAGE No.	REMARKS
D 333-83 to D 333-83e	Half-washer		65	
D 333-84	Washer		-	
D 333-300 to D 333-340	Washer		-	
D 334-2	Knob	VI	272	
DM 334-2a	Knob	VI	70-74	
DM 334-3a	Lever		- -	
DM 334-4b	Shaft		70	
DM 334-11	Spring		61	
DM 334-11a	Spring		-	
D 334-19	Fork		-	
D 334-47	Shoe		-	
DM 334-53	Lever		-	
DM 334-53a	Lever		-	
DM 334-56	Spring		-	
DM 334-58	Adjusting nut		70-74	
D 334-62	Dust plug		93-94	
DM 334-63a	Ball		70-74	
DM 334-64	Bush	VI	- -	
DM 334-66	Guide		70	
DW 334-66	Guide		-	
DM 334-70	Circlip		61	
DM 334-71	Control rod		70	
DM 334-73	Bush		70-74	
DM 334-75	Spindle		- -	
DM 334-75a	Spindle	VI	73	
DM 334-76	End piece		70	
DM 334-79	Cable	VI	-	
DM 334-83a	Pin		70-74	
DM 334-83b	Pin	VI	73	
D 334-85	Pin		61	
DM 334-87a	Ball		70-74	
DM 334-88	Screw		61	
DM 334-90	Bush	VI	70-74	
DM 334-92a	Lever		70	
DM 334-95a	Pin		70-74	
DM 334-96	Half bearing	VI	- -	
D 334-98	Lever		61	
DM 334-98	Washer	VI	70-74	
DM 334-102	Tube		70	
DM 334-105	Locking shaft		61	
DW 334-105	Locking shaft		-	
DM 334-108	Tube		-	
DM 334-115	Rubber joint		70-74	
DM 334-116	Distance bush		61	
DM 334-117	Distance bush		-	

NUMBER	DESCRIPTION	Section	PAGE No.	REMARKS
DM 334-122a	Bush		70-74	
DM 334-124a	Bush	VI	70	
DM 334-124b	Bush	VI	74	
DM 334-125a	Bracket		70	
DM 334-125b	Bracket		-	
DM 334-125c	Bracket		73	
DM 334-125d	Bracket		70	
DM 334-126	Bearing		-	
DM 334-128	Coupling flange		70-74	
DM 334-133	Rubber strap		- -	
DM 334-135	Shaft		74	
DM 334-135a	Shaft		-	
DM 334-145	Backplate	VI	-	
DM 334-156b	Bracket		-	
DM 334-156c	Bracket		-	
DM 334-156e	Bracket		-	
DM 334-156f	Bracket		-	
DS 334-181	Ring Seal		70-74	
DM 334-184	Cable	VI	74	
DM 334-184b	Cable	VI	-	
DM 334-190	End piece		-	
DM 334-191a	Control rod		-	
DM 334-191b	Control rod	VI	-	
DM 334-199a	Tube		-	
DM 334-199b	Tube		-	
DM 334-201a	Lever		-	
DM 334-201b	Lever	VI	-	
D 334-204	Clip	VI	213	
DM 334-249	Circlip		61	
DM 334-250	Washer		-	
DW 334-250	Washer		-	
DM 334-251	Screw		-	
DM 334-252	Screw		-	
DM 334-256	Pin		70-74	
DM 334-257	Circlip	VI	- -	
DM 334-258	Half washer		70-77	
DM 334-259	Screw		61	
DM 334-260	Shaft		-	
DM 334-260a	Shaft		-	
DW 334-260	Shaft		-	
DM 334-261	Shaft		-	
DM 334-262	Shaft		-	
DM 334-262a	Shaft		-	
DM 334-266	Tube		-	
DM 334-267	Locking shaft		-	
DW 334-267	Locking shaft	VI	-	
DS 334-279	Ring seal		110	
DM 334-300 to DM 334-308	Washer		61	

NUMBER	DESCRIPTION	Section	PAGE No.	REMARKS
DM 334-317	Guide		77	
DM 334-321	Bearing bracket		-	
DM 334-322a	Sealing strip	VI	-	
DM 335-05a	Synchromesh		66	
DW 335-09	Synchromesh		-	
D 335-8	Collar		-	
DM 335-8	Collar		-	
D 335-9a	Sliding pinion		-	
DM 335-15a	Rod		-	
DM 335-15b	Rod		-	
DM 335-16a	Synchromesh ring		-	
DW 335-18	Meshing plunger		-	
DM 335-70a	Ball carrier		-	
DM 335-70b	Ball carrier		-	
DM 335-70c	Ball carrier		-	
D 335-73	Spring		-	
D 335-82 to D 335-82h	Washer		-	
DW 335-88	Ring		-	
DW 335-88a	Ring		-	
DS 343-1a	Housing		69	
DS 343-1b	Housing		-	
DS 343-2	Planet gear		-	
D 343-3	Satellite pinion		-	
DS 343-5	Screw		-	
DS 343-6	Screw		-	
DS 343-7a	Washer	VI	-	
DS 343-7c	Washer	VI	-	
DS 343-7e	Washer	VI	-	
DS 343-7g	Washer	VI	-	
D 343-8	Washer		-	
D 343-8a	Washer		-	
D 343-8b	Washer		-	
DS 343-8c	Washer		-	
DS 343-8e	Washer		-	
DS 343-8g	Washer		-	
DS 343-8i	Washer		-	
D 343-9	Crosshead		-	
D 343-97 to D 343-97g	Washer		-	
D 343-98 to D 343-98g	Washer		-	
DS 344-01	Crown wheel and pinion		66-69	
DW 344-01	Crown wheel and pinion		- -	
DS 344-5	Nut		66	
D 344-90	Retaining ring		-	
D 344-96	Retaining ring		66	
D 371-1	Differential shaft		78	
D 371-1a	Differential shaft		-	
DS 371-1	Differential shaft		-	
DS 371-1a	Differential shaft		-	
D 371-3	Bearing housing		-	
D 371-3a	Bearing housing		-	
D 371-5	Bush	VI	-	
D 371-92	Bush		-	
D 371-93	Bush		-	
D 371-95	Screw		-	
D 371-96	Nut		-	
D 371-99	Washer	VI	-	
D 372-88	Dust shield		-	
D 372-89	Screw		81	
D 373-01b	Driveshaft		78	
D 373-01c	Driveshaft		-	
D 373-91	Half-retaining cover		-	
DS 373-94	Sealing ring	VI	-	
D 373-99	Rubber shield		-	
D 376-1	Driving sleeve		-	
D 376-2	Block		-	
DS 376-3	Flange		-	
D 376-4	Flange		-	
DS 376-4	Flange		-	
DS 376-6	Drive		-	
DS 376-70	Screw		-	
D 376-95	Sleeve		-	
D 381-1	Pinion		57	
D 381-2	Socket		-	
DF 391-01	Pump		114	
DS 391-02	Cylinder		-	
DS 391-03b	Regulator		110	
DS 391-07b	Shaft		114	
D 391-3a	Spring		-	
D 391-4a	Spring		-	
DS 391-4	Spring		-	
D 391-5	Valve		-	
D 391-10	Spring		110	
DS 391-11a	Cap		-	
DF 391-13	Pulley		114	
DS 391-15b	Pump body		-	
DS 391-16b	Bearing		-	
DS 391-16e	Bearing		-	
DF 391-18	Belt	VI	-	
D 391-20	Cover		-	
D 391-21	Bearing	VI	-	
DM 391-22	Bracket		110	
DM 391-25	Flexible tube		133	

NUMBER	DESCRIPTION	Section	PAGE No.	REMARKS
DF 391-48	Union		133	
DF 391-48a	Union		-	
DS 391-48a	Union		-	
DM 391-51	Bracket		110	
DS 391-52	Nut		-	
D 391-53	Cup		114	
D 391-54	Deflector		-	
D 391-55	Spring		-	
DS 391-56	Bush		-	
D 391-59	Washer		110	
D 391-59a	Washer		-	
D 391-60	Plug	VI	110-134	
D 391-63	Plug		134	
D 391-67	Joint		114	
DS 391-71	Block		133	
D 391-76	Nut		114	
D 391-77	Washer		-	
D 391-78	Adjusting shim		110	
D 391-78a	Adjusting shim		-	
D 391-78b	Adjusting shim		-	
DS 391-80	Ball retainer		-	
D 391-81	Cup with hall		-	
D 391-82	Ball		114	
D 391-83	Rod		-	
DF 391-84	Tube		133	
DF 391-85	Tie-rod		114	
DS 391-86	Plate			
D 391-88	Plug		134	
DS 391-88	Plate		114	
D 391-90a	Distance piece		-	
D 391-93	Joint		110	
DS 391-94	Collar		-	
DM 391-96	Screw		-	
D 391-98	Cup		114	
DS 391-98	Cup		-	
D 391-99	Circlip		-	
DF 391-100	Tube		133	
DF 391-102	Tube		-	
DF 391-102a	Tube		-	
DF 391-103	Screw		114	
DS 391-104	Rubber sleeve		133	
D 391-105	Flexible bush		-	
D 391-108	Flexible hush		-	
D 391-109	Protecting sleeve	VI	-	
DM 391-112	Connecting tube		-	
D 391-113	Bush		-	
DF 391-122	Tube		-	
DS 391-126	Tube		-	
D 391-127	Protecting sleeve		-	

NUMBER	DESCRIPTION	Section	PAGE No.	REMARKS
D 391-128	Protecting sleeve		133	
D 391-129	Protecting sleeve		-	
DS 391-131a	Screw		114	
DS 391-132a	Screw		-	
DS 391-133a	Screw		-	
DS 391-136	Connecting sleeve		133	
DS 391-140	Clip		-	
DS 391-141	Clip		-	
DS 391-144	Tube	VI	-	
DS 391-145	Tube	VI	-	
D 391-512 to D 391-529	Rod		114	
D 392-01	Accumulator		110	
DF 392-04	Accumulator		-	
D 392-3	Spring		-	
DF 392-76	Pipe		137	
DF 392-78	Pipe		-	
DF 392-81	Tie-rod		110	
DF 392-82	Tie-rod		-	
DF 392-85	Pipe		137	
D 392-88	Washer		110	
D 392-90	Sleeve (rubber)		133-137	
DF 392-91	Flange		110	
DS 392-91	Flange		-	
D 392-97	Screw		-	
DF 393-02	Reservoir		-	
DF 393-02a	Reservoir		-	
DM 393-02c	Reservoir		-	
DS 393-02g	Reservoir		-	
DM 393-03	Block		-	
DS 393-05a	Reservoir		-	
DS 393-05b	Reservoir		-	
D 393-2	Tube	VI	-	
DS 393-3	Filter	VI	-	
DS 393-4	Filter	VI	-	
DS 393-22	Tube	VI	-	
DM 393-23	Cap	VI	-	
DS 393-61	Spring	VI	-	
D 393-69	Plunger		-	
D 393-75	Strap		-	
DS 393-85	Washer	VI	-	
DM 393-87	Distance piece		-	
D 393-90	Joint		-	
D 393-92	Spring		113	
D 393-93	Plug		-	
D 393-97	Felt lining		-	
D 412-03	Arm		81	
D 412-03a	Arm		-	

NUMBER	DESCRIPTION	Section	PAGE No.	REMARKS
DF 412-3	Bracket		81	
DF 412-3a	Bracket		–	
D 412-4a	Nut		–	
DS 412-4	Nut		–	
DS 412-8	Arm		–	
DS 412-8a	Arm		–	
D 412-83	Cap		–	
D 412-84 to D 412-84m	Washer		–	
D 412-85	Washer		–	
D 412-86a	Screw		–	
DS 412-86	Screw		–	
D 412-88a	Screw		–	
D 413-03	Ball pin assembly		–	
DS 413-03	Ball pin assembly		–	
DS 413-03a	Ball pin assembly		–	
DS 413-04	Ball pin assembly		–	
DS 413-07	Swivel		–	
DS 413-07a	Swivel		–	
DS 413-07b	Swivel		–	
DS 413-07c	Swivel		–	
DS 413-4	Lever		–	
D 413-11	Nut	VI	–	
D 413-81	Spring		81-117	
D 413-85	Joint		81	
DS 413-85	Joint		–	
DS 413-87a	Cup	VI	–	
DS 413-87a	Cup	VI	–	
DS 413-300 to DS 413-327	Washer		82	
DM416-80a	Balance weight	VI	214	
DM416-80b	Balance weight	VI	–	
DM416-80c	Balance weight	VI	–	
DM416-80d	Balance weight	VI	–	
DM416-80e	Balance weight	VI	–	
DS 416-80a	Balance weight	VI	–	
DS 416-80b	Balance weight	VI	–	
DS 416-80c	Balance weight	VI	–	
DS 416-80e	Balance weight	VI	–	
D 416-81	Washer	VI	82-85	
D 416-83	Cone	VI	–	
DM416-85	Spring	VI	214	
D 416-88	Screw	VI	82-85	
DS 416-89	Washer	VI	–	
D 416-93	Spring		–	
D 416-96	Deflector		82	
D 416-97	Seal	VI	–	

NUMBER	DESCRIPTION	Section	PAGE No.	REMARKS
DM 416-97	Seal	VI	82	
DM 416-98	Clip		214	
DF 422-01b	Arm		85	
DF 422-01c	Arm		–	
DF 422-1b	Arm		–	
DF 422-1c	Arm		–	
D 422-2	Nut		–	
D 422-6	Nut		–	
D 422-8	Nut		–	
D 422-79	Screw		–	
D 422-80b	Cup		82-85	
D 422-91	Seal ring		85	
D 422-95c	Bush	VI	82-85	
D 422-96	Bearing housing		85	
D 422-98	Cap		–	
DS 422-98	Cap		–	
DF 426-3	Nut		–	
D 426-5	Stub axle		–	
D 426-15	Distance piece		–	
D 426-89	Ring		–	
D 426-92	Dowel	VI	82-85	
D 426-93a	Washer		85	
D 426-99	Lockwasher		–	
D 426-300 to D 426-342	Washer		–	
DS 433-01c	Suspension sphere		117	
DS 433-02a	Suspension sphere		121	
D 433-82	Plug		134	
D 433-85	Sleeve		117	
D 433-90	Rubber joint		113-117-121	
DF 434-02	Cylinder		121	
DM 434-02a	Cylinder		117	
DS 434-02	Cylinder		–	
DS 434-04	Nut		–	
D 434-3	Piston rod		–	
DF 434-3	Piston rod		121	
DF 434-4b	Lever		82	
DF 434-4c	Lever		–	
D 434-5	Shield		117	
D 434-5a	Shield		–	
DS 434-5b	Shield		–	
DS 434-57	Washer		–	
D 434-62a	Protective bush		117-121	
D 434-63	Protective bush		–	
D 434-65	Protective ring		–	
D 434-67	Plate		121	
D 434-68	Connecting pin		117	
D 434-70	Plug		134	

NUMBER	DESCRIPTION	Section	PAGE No.	REMARKS
DS 434-71	Distance ring	VI	82	
DF 434-74	Dust cover		121	
D 434-76	Felt washer		-	
D 434-76a	Felt washer		117	
D 434-79	Cup	VI	121	
D 434-80	Connecting pin		-	
D 434-81	Dust cover		-	
D 434-86	Dust cover		117	
D 434-94	Seal ring		121	
D 434-94a	Seal ring		117	
D 434-106	Shield		-	
D 434-107	Shield		-	
DS 435-02d	Corrector		117-121	
DM 435-05	Rod		121	
DS 435-11	Anti-roll bar		86	
D 435-20	Diaphragm		117	
DS 435-20	Diaphragm		-	
DF 435-21	Tube		133	
D 435-23	Anti-roll bar		117	
D 435-23a	Anti-roll bar		-	
DS 435-23	Anti-roll bar		-	
DF 435-25	Tube		133	
DM 435-28	Tube		-	
DF 435-30	Tube		-	
DM 435-33	Closing block	VI	-	
DM 435-34	Closing block	VI	-	
DS 435-39a	Spring		117	
DS 435-40a	Spring		-	
DM 435-41	Pipe assembly		133	
DF 435-42	Pipe		134	
DM 435-43	Pipe		-	
DF 435-44	Pipe		-	
DS 435-45	Valve		117	
DS 435-46	Spring		-	
DM 435-51b	Rod		-	
DM 435-53	Rubber packing		134	
DS 435-55	Bracket		117	
DM 435-57	Clip		134	
D 435-58	U bolt		117	
D 435-58a	U bolt		-	
DS 435-70	Collar		-	
D 435-80a	Cup		-	
D 435-82	Cup		-	
DS 435-82	Cup		--	
D 435-91	Plug	VI	134	
D 435-96	Cup		117	
D 435-111	Half bearing	VI	118	
D 435-111a	Half bearing	VI	-	
DS 435-112a	Bearing cap		-	
DS 435-112b	Bearing cap		118	
DM 435-122	Bracket		121	
DS 435-125	Tube		134	
DF 435-130	Tube		-	
DF 435-142	Cover		121	
DF 435-146a	Tube		134	
DS 435-147	Cup		118	
DS 435-148	Nut		-	
D 435-149	Sleeve		121-138-141	
D 435-150	Sheath		134-137	
D 435-153 to D 435-153g	Shim		118	
D 435-155	Sealing rubber	VI	121	
DM 435-165	Rubber packing		134	
DS 435-167	Ring		118	
DS 435-168	Cup		-	
DS 435-169	Cup		-	
DS 435-172	Buffer		-	
DS 435-174	Bearing	VI	-	
DS 435-175	Connecting sleeve		-	
D 436-06a	Damper		-	
DF 436-06	Damper		121	
DF 436-07	Valve assembly	VI	-	
DS 436-07a	Valve assembly	VI	118	
DS 436-95a	Stud		118-121	
D 436-98	Nut		-	
DS 436-98	Nut		-	
DF 437-1	Buffer		86	
DE 437-3	Buffer		82	
DM 437-5	Rod		138	
DM 437-5a	Rod		141	
DM 437-6	Lever		138	
DM 437-6b	Lever		141	
DM 437-8a	Rod		138-141	
DM 437-9	Rod		-	
DF 437-10	Stop		82	
DM 437-50	Shaft		141	
DM 437-55	Rod		138	
DM 437-55a	Rod		141	
DM 437-58	Screw	VI	-	
DM 437-73	Quadrant		138	
DM 437-73a	Quadrant		141	
DM 437-76	Pipe	VI	-	
DM 437-80	Lever		138	
DM 437-82	Lever	VI	141	
DM 437-101	Rod		138-141	
DM 437-109	Bush	VI	-	
DM 437-110	Rod		-	

NUMBER	DESCRIPTION	Section	PAGE No.	REMARKS
DM 437-112	Nut	VI	118-141	
DM 437-113	Link		- -	
DM 437-118a	Collar		- -	
DM 437-119	Locknut	VI	- -	
DM 437-123	Fork end		- -	
DM 437-123a	Fork end	VI	141	
DF 437-139	Clip		82	
DF 437-140	Clip		-	
DM 437-148	Bracket		141	
DM 437-149	Bearing	VI	-	
D 441-la	Steering wheel		90	
DM 441-1	Steerfng wheel		89	
DM 441-6	Coupling		-	
D 441-8	Ring		89-90	
DM 441-9	Ring		89	
DW 441-9	Ring		89-90	
D 441-10	Spring		-	
DS 441-12	Segment	VI	-	
DM 441-13	Ring		89	
DW 441-13	Ring		-	
DW 441-57	Cup		89-90	
DM 441-67	Locking plate		89	
DW 441-67	Locking plate		89-90	
DS 441-69	Collar		-	
D 441-78	Washer		-	
DM 441-78	Locking plate		89	
DW 441-78	Locking plate		-	
DW 441-83	Distance piece		90	
D 441-85a	Washer		89-90	
DS 441-87	Splitbush		-	
DM 441-100	Screw		-	
DS 442-01a	Pinion		98	
D 442-04a	Casing		94	
DM 442-04a	Rock housing		93	
DM 442-05a	Steering box complete		-	
DS 442-05b	Housing		94	
DM 442-010a	Rock housing		93	
DM 442-011a	Steering box complete		-	
DS 442-014a	Pinion		98	
D 442-1	Plunger guide		93-94	
DS 442-2	Spring		-	
DS 442-3	Nut		-	
D 442-4	Rack		94	
DM 442-4	Rack		93	
DM 442-6	Rack		-	
D 442-8	Ball pin		94	
DM 442-8	Ball pin		93	
DM 442-9	Rack pinion		-	
DM 442-13	Rack pinion		-	

NUMBER	DESCRIPTION	Section	PAGE No.	REMARKS
DM 442-19	Nut	VI	93	
D 442-20	Dust cover		94	
DM 442-20	Dust cover		93	
D 442-21	Nut	VI	93-94	
D 442-52	Cap		-	
DM 442-55	Cap	VI	93	
D 442-58	Nut		93-94	
DM 442-58	Nut		93	
D 442-59	Locknut		94	
D 442-60	Washer		-	
DM 442-60	Sealing ring		93	
D 442-68	Tab washer	VI	93-94	
D 442-76	Guide block		-	
DM 442-76	Guide block		93	
D 442-79	Cover plate		94	
D 442-79a	Cover plate		-	
DM 442-79	Cover plate		93	
DM 442-86	Sealing cup		-	
D 442-91	End piece		98	
D 442-93	Cap		93-94	
DM 442-94	Cover plate		93	
DM 442-95	Screw		101	
DM 442-120	Spring		93	
DS 442-120	Spring		102	
DS 442-300 to DS 442-364	Washer		93-94	
D 443-01	Steering rod		101-102	
D 443-Ola	Steering rod		-	
D 443-03	Relayhousing		102	
D 443-03a	Relay housing		-	
DM 443-03a	Relay housing		101	
D 443-04	Rod end		101-102	
DS 443-05	Relay housing		-	
DM 443-06a	Steering arm		101	
DS 443-06	Steering arm		102	
DM 443-07	Relay housing		101	
DM 443-08	Relay housing		-	
DM 443-09	Relay housing		-	
D 443-7	Rubber bushing	VI	101-102	
D 443-9	Steering lever		102	
D 443-9a	Steering lever		-	
DM 443-9a	Steering lever		101	
DM 443-9h	Steering lever		-	
DS 443-10	Sleeve nut		101-102-118	
D 443-11	Nut		93-97-101-102	
DM 443-12	Shield		101-102	
DM 443-12a	Shield		-	
DM 443-15	Steering lever		101	

NUMBER	DESCRIPTION	Section	PAGE No.	REMARKS
DM 443-15a	Steering lever		101	
DM 443-64	Sealing strip	VI	220-228	
DS 443-64	Sealing strip		231	
DM 443-65	Rubber seal		228-231	
D 443-66	Ring nut		101	
DS 443-66	Ring nut		101-102	
D 443-67	Ring nut			
D 443-70	Clip		101-102-118	
DS 443-71	Washer		101-102	
DM 443-73	Shackle		101	
DS 443-73	Shackle		102	
D 443-74	Screw		101-102-114	
D 443-78	Ring		101	
DS 443-78	Protector		101-102	
DM 443-82	Backplate		231	
D 443-83	Cap		101-102	
DM 443-84	Backplate		231	
D 443-87	Nut		101-102	
DS 443-88	Spindle		- -	
D 443-89	Washer		- -	
D 443-89a	Washer		- -	
DS 443-94	Sealing cup	VI	- -	
D 443-95	Rubber ring		- -	
DM 443-96	Pin		- -	
DS 444-01b	Control		98	
DS 444-02a	Plug		-	
DS 444-3	Cylinder		-	
DS 444-4	Rod		-	
D 444-6	Rod		97	
D 444-9	Fork		98	
DS 444-12	Cover		-	
D 444-13	Joint		97	
DS 444-18c	Piping		134	
DW 444-49	Pipe		-	
DS 444-62	Nut		98	
DS 444-63	Ring seal	VI	98-114	
DS 444-64a	Joint		98	
DS 444-65	Ring seal		114	
DS 444-72	Washer		98	
DS 444-73	Seal plate		-	
DS 444-75	Ring seal	VI	-	
D 444-76	Union		-	
D 444-78	Washer	VI	-	
D 444-80	Rod		97	
D 444-81	Retainer		-	
DS 444-82a	Piping		134	
DS 444-85	Seal plate	VI	98	
DS 444-89	Screw		-	
D 444-90	Bush		-	

NUMBER	DESCRIPTION	Section	PAGE No.	REMARKS
D 444-91	Needle	VI	98	
D 444-92	Sealing ring		-	
D 444-97a	Pin		97	
D 444-98a	Circlip		98	
D 444-99b	Washer		-	
D 444-99c	Washer		-	
D 444-99d	Washer		-	
D 444-99e	Washer		-	
D 444-99f	Washer		-	
D 444-99g	Washer		-	
D 444-99h	Washer		-	
D 444-100	Bush		97	
D 444-105	Washer		98	
DS 444-106	Joint	VI	-	
DS 444-108	Joint	VI	-	
DS 444-110	Joint	VI	-	
DS 445-1	Cam		90	
DS 445-2	Spring		-	
D 445-91	Clip		-	
D 445-94	Screw		-	
D 445-95	Washer	VI	-	
D 445-96	Washer		-	
D 445-97	Bearing		-	
D 445-98	Clip		-	
DE 451-03	Backplate		109	
DM 451-04d	Brake unit		105	
DM 451-04e	Brake unit		-	
DM 451-08b	Brake unit		-	
DM 451-08d	Brake unit		-	
DS 451-2	Pivot pin		109	
DF 451-5	Drum		86	
DS 451-15	Eccentric		109	
DF 451-19	Brake shoe		-	
DF 451-20	Brake shoe		-	
D 451-21a	Spring		-	
DM 451-24b	Housing		105	
DM 451-24c	Housing		-	
DS 451-31	Casing		-	
DS 451-31a	Casing		-	
DM 451-32a	Plate		-	
D 451-33	Support		-	
D 451-33a	Support		-	
D 45137	Support		-	
D 451-37a	Support		-	
D 451-38	Support		-	
D 451-38a	Support		-	
DE 451-43	Brake shoe		109	
DF 451-44	Brake shoe		-	
D 451-52	Pin		105	

NUMBER	DESCRIPTION	Section	PAGE No.	REMARKS
D 451-55	Sheath		105	
D 451-58	Screw		-	
D 451-59	Spherical bush		-	
D 451-59a	Spherical bush		-	
DS 451-61	Plate		109	
D 451-67	Bush	VI	105	
D 451-79	Spring		-	
DF 451-83	Rod	VI	109	
DS 451-87	Guide pin		-	
DS 451-90	Lockplate		-	
D 451-91	Drain ring		-	
D 451-102	Pin		105	
DS 451-103	Screw		-	
DS 451-103a	Screw		-	
DS 451-103b	Screw		-	
D 451-105	Thrust pad		-	
D 451-105a	Thrust pad		-	
D 451-106	Support	VI	-	
D 451-110	Screw		109	
DM 452-1	Duct		105	
DS 452-1a	Duct		-	
DS 452-89	Joint	VI	-	
D 452-92	Crosspiece		216	
DS 453-05a	Cylinder		109	
DF 453-08	Piping		137	
DF 453-08a	Piping		-	
DS 453-021d	Body		130	
DM 453-030a	Carrier		105	
D 453-1a	Pedal		130	
DS 453-1a	Pedal		-	
DS 453-1b	Pedal		-	
DF 453-9	Pipe assembly		-	
DF 453-9a	Pipe assembly		-	
DS 453-9d	Pipe assembly		-	
DW 453-9	Pipe assembly		-	
D 453-15	Circlip		-	
DF 453-16	Pipe assembly		137	
DF 453-16a	Pipe assembly		-	
DS 453-20a	Cylinder		109	
DS 453-21	Piston		-	
DM 453-24	Dust cap		-	
DF 453-27	Feed pipe		137	
DF 453-27a	Feed pipe		-	
D 453-36a	Bush		130	
DS 453-36	Bush		-	
DF 453-41	Piping		137	
DM 453-41	Piping		-	
DM 453-46	Piston		105	
D 453-47	Rod		-	

NUMBER	DESCRIPTION	Section	PAGE No.	REMARKS
DF 453-49	Piping		137	
DF 453-50	Piping		-	
DF 453-50a	Piping		-	
D 453-51	Spring		130	
D 453-52	Joint		-	
DS 453-52	Tube	VI	137	
D 453-53	Washer		130	
DS 453-54a	Seal plate	VI	-	
DM 453-55a	Tube		137	
D 453-58	Screw		-	
D 453-60	Lining		-	
D 453-63	Cup		130	
DS 453-64	Screw		137	
D 453-69	Joint	VI	130	
DS 453-69	Joint		-	
D 453-70	Plug		-	
D 453-82	Lining		134-137	
DM 453-82	Sleeve	VI	134	
DM 453-82a	Sleeve	VI	49-50	
D 453-91c	Washer		130	
D 453-91d	Washer		-	
DF 453-93	Backplate		137	
DS 453-94	Plate		-	
DS 453-95	Clip		-	
D 453-97	Lining		130	
DM 453-97	Lining		129	
DS 453-97	Lining		130	
D 453-98	Pad		-	
DS 453-98	Pad		-	
DM 453-108	Plate		105	
D 453-115	Pin		130	
DS 453-118	Joint		109	
DS 453-119	Seal ring		98-113	
DS 453-119	Seal ring		105	
DM 453-120	Shim		-	
DM 453-120	Shim		-	
DM 453-120	Shim		-	
DM 453-121	Protector	VI	137	
D 453-123	Circlip	VI	105	
D 453-131	Plug	VI	134	
D 453-132	Plug	VI	-	
D 453-135	Plug		137	
D 453-136	Clamp		-	
D 453-141	Support		-	
D 453-144	Screw		-	
D 453-149	Sleeve		134	
D 453-150	Plug		137	
DF 453-152	Union		-	
D 453-158	Screw		130	

NUMBER	DESCRIPTION	Section	PAGE No.	REMARKS
DS 453-163	Pipe		137	
DF 453-168	Shield		-	
DF 453-168a	Shield		-	
D 453-173	Sleeve		134	
D 453-177	Clip		-	
DE 453-180	Pipe assembly		137	
DE 453-199	Tube		-	
DS 453-211	Ring		130	
DS 453-216a	Seal plate	VI	137	
DM 454-06	Lever		122	
DM 454-010	Lever		-	
DM 454-1a	Cable		-	
DM 454-1b	Cable		-	
DM 454-3	Lever		-	
DM 454-6	Lever		-	
DM 454-11b	Push rod		105	
DM 454-11c	Push rod		-	
DM 454-12	Push rod		-	
DM 454-12a	Push rod		-	
DM 454-13a	Lever		106	
DM 454-14	Lever		-	
DM 454-15a	Lever		-	
D 454-16a	Cable	VI	122	
DS 454-18	Buffer		-	
D 454-22	Wheel		106	
D 454-22a	Wheel		-	
DM 454-24	Bracket		122	
DM 454-24c	Bracket		-	
DM 454-24d	Bracket		-	
DM 454-27a	Handle		-	
DM 454-28	Spring		-	
DM 454-29	Lock		-	
DM 454-30	Ratchet rod		-	
DS 454-33	Pawl	VI	106	
DS 454-33a	Pawl	VI	-	
DS 454-33b	Pawl	VI	-	
DM 454-34e	Cable		122	
DM 454-34f	Cable		-	
D 454-35	Locking pin		106	
DM 454-38	Lever		-	
DM 454-39	Lever		-	
DM 454-39b	Lever		-	
DM 454-52	Half-stay		122	
DM 454-54	Pin		-	
DM 454-55	Distance bush	VI	-	
DM 454-57	Pin		-	
D 454-63	Pedal pad		125	
DM 454-67	Screw		122	
D 454-71	Pin		106	

NUMBER	DESCRIPTION	Section	PAGE No.	REMARKS
D 454-72	Spring		106	
D 454-74	Screw	VI	-	
D 454-76	End sleeve		122	
D 454-77	Spring		106	
D 454-78	Spring		-	
D 454-79	Plunger	VI	-	
DM 454-89a	Split cotter		-	
D 454-93	Disc		-	
D 454-94	Guide bush	VI	-	
DS 454-95	Grommet	VI	122	
DM 454-103	Release rod		-	
DM 454-109	Spring		-	
DS 454-113	Seal	VI	129	
DM 454-115	Pin		122	
D 454-118	Nut	VI	106	
DM 454-119	Pin		122	
DM 454-142	Stop		106	
D 454-160	Cup		-	
DF 456-0	Distributor		130	
D 456-1	Body		-	
D 456-2	Guide cap		-	
DF 456-3	Slide valve		-	
D 456-4	Trolley		-	
DS 456-50	Washer		-	
D 456-92	Plate		-	
D 456-93	Plate		-	
D 456-96	Spindle		-	
DF 456-98	Spring		-	
D 456-99	Joint		-	
DF 511-4	Harness		178	
DM 511-8c	Cable		-	
DF 511-19	Cable		38-42	
DA 511-23	Harness		178	
DA 511-23b	Harness		-	
DA 511-23f	Harness		-	
DB 511-23	Harness		-	
DB 511-23c	Harness		-	
DB 511-23p	Harness		-	
DB 511-23r	Harness		-	
DF 511-23	Harness		-	
DF 511-23a	Harness		-	
DB 511-24	Harness		-	
DB 511-24a	Harness		-	
DB 511-24b	Harness		-	
DB 511-24d	Harness		-	
DB 511-24e	Harness		-	
DF 511-24b	Harness		-	
DF 511-24d	Harness		-	
DF 511-24e	Harness		-	

NUMBER	DESCRIPTION	Section	PAGE No.	REMARKS
DM 511-25	Harness		178	
DM 511-25a	Harness		-	
DS 511-25	Harness		-	
DS 511-25a	Harness		-	
DF 511-26	Harness		-	
DF 511-26a	Harness		-	
DM 511-45	Protector		179	
DM 511-59	Protector		-	
DM 511-63	Harness		178	
DS 511-63a	Cable		-	
D 511-82	Tube		179	
DS 511-95	Bush		-	
D 511-97	Bush		-	
D 511-98	Bush		-	
DM 512-98	Tube		-	
DB 521-02e	Instrument panel	VI	146	
DB 521-02g	Instrument panel	VI	142-146	
DM 521-02v	Instrument panel	VI	-	
DM 521-02x	Instrument panel	VI	146	
DM 521-02z	Instrument panel	VI	142-146	
DF 521-03g	Instrument panel	VI	149	
DB 521-03e	Instrument panel	VI	146	
DM 521-03j	Instrument panel	VI	142-149	
DM 521-03m	Instrument panel	VI	-	
DM 521-03q	Instrument panel	VI	149	
DM 521-03u	Instrument panel	VI	-	
DM 521-07g	Instrument panel	VI	146	
DM 521-07i	Instrument panel	VI	-	
DM 521-07k	Instrument panel	VI	-	
DB 521-7	Sleeve	VI	150	
DM 521-7	Sleeve	VI	-	
DM 521-7a	Sleeve	VI	-	
DM 521-12	Petrol gauge	VI	142-149	
DM 521-12a	Petrol gauge	VI	142-146	
DM 521-13	Clock	VI	142	
DM 521-13b	Clock	VI	146-149	
DW 521-13	Clock	VI	142-150	
DA 521-15	Clock	VI	149	
DM 521-15	Gauge	VI	142-146	
DA 521-78	Joint	VI	142-150	
DM 521-83a	Cable flexible	VI	-	
DM 521-83d	Cable flexible	VI	-	
DM 521-83g	Cable flexible	VI	150	
DM 521-84a	Cable flexible	VI	142-150	
D 521-96	Bush rubber		142-150-239	
D 521-97	Grommet		235	
DA 521-102	Glass	VI	146-149	
DM 521-102	Glass	VI	142-146	
DM 521-102a	Glass	VI	142-149	

NUMBER	DESCRIPTION	Section	PAGE No.	REMARKS
DM 521-102b	Glass	VI	142-146	
DM 521-102e	Glass	VI	146	
DM 521-102g	Glass	VI	149	
DM 521-102h	Glass	VI	-	
DM 521-102i	Glass	VI	-	
DM 521-102j	Glass	VI	-	
DM 521-102	Glass	VI	146	
DM 521-102	Glass	VI	-	
D 522-02	Switch	VI	142-150	
DM 522-02	Switch	VI	-	
DE 522-05	Switch	VI	-	
DM 522-05h	Switch	VI	-	
DM 522-05c	Switch	VI	150	
D 522-7a	Switch	VI	169-173	
DM 522-9	Switch	VI	142	
DM 522-9a	Switch	VI	150	
DM 522-10	Switch	VI	142-182	
DM 522-lOb	Switch	VI	150-201-206-213	
DM 522-12	Switch	VI	142	
DM 522-12b	Switch	VI	150	
DM 523-1	Fuse holder	VI	179	
DM 523-4	Fuse	VI	-	
DM 523-6	Bracket	VI	-	
DM 523-6a	Bracket	VI	-	
DM 523-6b	Bracket	VI	-	
DM 523-99	Grommet	VI	-	
DM 523-99a	Grommet	VI	-	
DS 523-99	Grommet	VI	-	
DM 524-01b	Solenoid	VI	162-165	
DM 524-01c	Solenoid	VI	-	
DS 524-01a	Solenoid	VI	-	
DM 524-93	Clamp		-	
DM 524-98b	Clamp		-	
DM 525-2c	Control	VI	142	
DM 525-2g	Control	VI	150	
DM 525-2i	Control	VI	-	
DM 525-2k	Control	VI	-	
DS 525-99	Rubber		142-150	
DS 531-2d	Bracket		150	
DM 531-7a	Bracket		145-150	
DM 531-8	Tray	VI	-	
DW 531-72	Spring		-	
DM 531-73	Distance bush		145	
DM 531-73a	Distance bush		150	
DS 531-75a	Stay		153	
DW 531-75	Stay		145-153	
D 531-83	Tube	VI	-	
DM 531-87	Stay		145	
DM 531-87a	Stay		-	

NUMBER	DESCRIPTION	Section	PAGE No.	REMARKS
DS 531-87	Stay		153	
DS 53I-91d	Bracket		-	
DW 531-91	Bracket		-	
DF 531-92a	Frame		145-153	
DM 531-92f	Frame		-	
DS 531-92h	Frame		153	
DF 532-0	Dynamo	VI	154	
DF 532-0a	Dynamo	VI	158	
DS 532-0u	Dynamo	VI	157	
DS 532-0v	Dynamo	VI	161	
DF 532-03	End plate	VI	158	
DS 532-03	End plate	VI	154	
DS 532-03b	End plate	VI	161	
DM 532-07	End plate	VI	158	
DS 532-07a	End plate	VI	157	
DS 532-07b	End plate	VI	161	
DF 532-4	Coil	VI	158	
DS 532-4b	Coil	VI	154	
DS 532-4c	Coil	VI	157	
DS 532-4d	Coil	VI	161	
DM 532-10	Tell-tale	VI	142	
DM 532-10a	Tell-tale	VI	150	
DS 532-11	Brush holder	VI	154	
DS 532-13	Bush	VI	157	
DF 532-15	Spring	VI	158	
DF 532-28	Armature	VI	-	
DM 532-28	Armature	VI	154	
DS 532-28c	Armature	VI	157	
DS 532-28d	Armature	VI	161	
DS 532-32a	Belt adjuster		154-157-158-161	
DM 532-34	Pulley	VI	154	
DM 532-34a	Pulley	VI	158	
DS 532-34d	Pulley	VI	157	
DS 532-34e	Pulley	VI	161	
DS 532-36a	Plate	VI	158	
DS 532-40	Bearing	VI	161	
DS 532-85	Washer		154-157-158	
DS 532-85a	Washer		-	
DS 532-85b	Washer		161	
DS 532-85c	Washer			
DS 532-87	Plate	VI	154	
DS 532-88	Support	VI	-	
DS 532-89	Harness	VI	-	
DF 532-94	Rod	VI	158	
DS 532-94	Rod	VI	154	
DS 532-94c	Rod	VI	161	
DF 533-01	Starter motor	VI	165	
DM 533-01	Starter motor	VI	162	
DM 533-01a	Starter motor	VI	165	

NUMBER	DESCRIPTION	Section	PAGE No.	REMARKS
DS 533-01a	Starter motor	VI	162	
DS 533-01b	Starter motor	VI	165	
D 533-1	Gear ring		17-162-165	
DM 533-2	Bush	VI	162	
DE. 533-3	Pinion housing	VI	165	
DM 533-3	Pinion housing	VI	162	
DS 533-3b	Pinion housing	VI	-	
DS 533-6	Spring	VI	162-165	
DF 533-9	Coil	VI	165	
DM 533-9	Coil	VI	162	
DM 533-9a	Coil	VI	165	
DF 533-11	Armature	VI	-	
DM 533-11	Armature	VI	162	
DM 533-11a	Armature	VI	165	
DM 533-12	Bush	VI	162	
DF 533-13	End plate	VI	165	
DM 533-13	End plate	VI	162	
DM 533-14	Brush holder	VI	-	
DF 533-15	Brush	VI	165	
DF 533-15a	Brush	VI	-	
DM 533-15	Brush	VI	162	
DM 533-15a	Brush	VI	-	
DM 533-16	Spring	VI	-	
DM 533-20	Terminal	VI	-	
DS 533-20a	Terminal	VI	165	
D 533-21b	Bendix drive	VI	162-165	
DF 533-22	Bearing plate	VI	165	
DM 533-22	Bearing plate	VI	162	
DS 533-24	Threaded sleeve	VI	162-165	
DS 533-25	Spring	VI	-	
DS 533-26	Pinion	VI	-	
DS 533-28	Drive sleeve	VI	-	
DM 533-36	Screw		-	
DS 533-37	Shield		-	
DF 533-40	Bush	VI	162	
DS 533-85	Washer	VI	162-165	
DS 533-88	Nut	VI	-	
DS 533-89	Washer	VI	-	
DS 533-90	Lockplate	VI	-	
DS 533-91	Bush	VI	-	
DF 533-97	Rod	VI	165	
DM 533-97	Rod	VI	162	
DS 533-102	Bracket		162-165	
DM 535-1d	Regulator	VI	154-157-158-161	
DS 535-1d	Regulator	VI	157-161	
DM 535-89	Rubber stop		154-157-158-161	
DS 541-03	Bracket	VI	166	
DS 541-03a	Bracket	VI	-	
DS 541-03b	Bracket	VI	-	

NUMBER	DESCRIPTION	Section	PAGE No.	REMARKS
DS 541-01d	Bracket	VI	166	
DS 541-03e	Bracket	VI	-	
DM 541-1c	Headlamp	VI	173	
DS 541-1a	Headlamp	VI	166	
DS 541-1b	Headlamp	VI	-	
DS 541-1k	Headlamp	VI	-	
DS 541-1m	Headlamp	VI	-	
DS 541-1n	Headlamp	VI	-	
DM 541-4	Glass	VI	173	
DS 541-4	Glass	VI	166	
DS 541-4a	Glass	VI	-	
DS 541-4c	Glass	VI	-	
DS 541-4e	Glass	VI	-	
DS 541-11	Dust cover	VI	-	
DS 541-11a	Dust cover	VI	-	
DS 541-11b	Dust cover	VI	-	
DS 541-12	Rim	VI	166-173	
DS 541-12a	Rim	VI	166	
DS 541-12b	Rim	VI	-	
DS 541-13	Bulb holder	VI	166-173	
DS 541-13a	Bulb holder	VI	166	
DS 541-11c	Connector	VI	-	
DS 541-11e	Connector	VI	166-173	
DS 541-97	Clip	VI	166	
D 544-04a	Lamp	VI	169	
DF 544-06	Lamp	VI	170-174	
DF 544-06a	Lamp	VI	-	
DF 544-06b	Lamp	VI	-	
DF 544-06c	Lamp	VI	-	
DF 544-01	Lamp	VI	-	
DM 544-011	Lamp	VI	174	
DF 544-3a	Bracket		169-170-174	
DF 544-6	Lamp	VI	170-174	
DF 544-8	Glass	VI	170-177	
D 544-10	Tell-tale	VI	166-173	
D 544-11	Joint			
DF 544-89	Glass	VI	170-177	
DF 544-89a	Glass	VI	169-170-174	
DF 544-89b	Glass	VI	170-177	
DF 544-89c	Glass	VI	169-174	
DF 544-93	Bracket		170-177	
DF 545-2a	Interior lamp	VI	169-173	
DF 545-2c	Interior lamp	VI	-	
DF 545-2d	Interior lamp	VI	-	
DM 545-2	Interior light	VI	169	
DM 545-2a	Interior light	VI	169-173	
DM 545-4a	Glass	VI	-	
DF 545-20	Cover	VI	-	
DM 551-1a	Driving	VI	180	

NUMBER	DESCRIPTION	Section	PAGE No.	REMARKS
DM 551-3c	Mirror	VI	180	
DM 551-80	Base mirror		-	
DM 551-82	Support		-	
DM 554-01	Sun visor		-	
DM 554-01a	Sun visor		-	
DM 554-01c	Sun visor		-	
DM 554-01d	Sun visor		-	
DM 554-1	Panel		-	
DM 554-1a	Panel		-	
DJA 554-1b	Panel		-	
DS 554-83	Hinge pin		-	
D 554-90	Plug	VI	-	
D 554-91	Friction bearing	VI	-	
D 554-96	Sleeve	VI	-	
DS 554-97	Bracket		-	
DS 554-97a	Bracket		-	
D 561-01a	Motor	VI	182	
DS 561-01c	Motor	VI	186	
DS 561-01d	Motor	VI	-	
DS 561-2a	Motor	VI	18S	
DS 561-3	Fixing plate	VI	182	
D 561-6	Plate	VI	-	
DS 561-6	Fixing plate	VI	185	
DS 561-7	Bracket	VI	-	
DS 561-8	Block	VI	-	
DS 561-51	Drive	VI	-	
DS 561-63	Backplate	VI	186	
DS 561-65	Joint	VI	185	
DS 561-66	Stud	VI	-	
DS 561-67	Plate	VI	-	
DS 561-68	Plate	VI	-	
DS 561-68a	Handle	VI	186	
DS 561-69	Washer	VI	185	
DS 561-70	Screw	VI	-	
DS 561-70a	Screw	VI	186	
DS 561-71	Retainer	VI	185	
DS 561-76	Nut	VI	-	
D 561-77	Screw		182	
DS 561-77	Screw	VI	185	
DS 561-80	Washer	VI	-	
DS 561-81	Washer	VI	186	
DF 564-03	Reservoir	VI	145-153	
DS 564-03a	Reservoir	VI	145	
DS 564-03c	Reservoir	VI	153	
DS 564-07b	Screen washer	VI	145-153	
DM 564-5	Nozzle		197-201-206	
DM 564-6	Nozzle		-	
DS 564-8c	Jet	VI	1451S3	
DS 564-8d	Jet	VI	-	

NUMBER	DESCRIPTION	Section	PAGE No.	REMARKS
DM 564-9	Pump	VI	145	
DM 564-9a	Pump	VI	153	
DS 564-54a	Joint	VI	145-153	
DM 564-55a	Tube	vi	-	
DS 564-55b	Tube	VI	-	
DS 564-67a	Lid	VI	-	
DS 564-67b	Lid	VI	153	
DS 564-72a	Reservoir	VI	145	
DS 564-72b	Reservoir	VI	153	
D 564-80	Plate		197-201-206	
DM 564-84	Flexible tube	VI	-	
D 564-85	Flexible tube	VI	-	
DM 564-103	Tube	VI	145-153	
DM 564-105	Protector	VI	-	
DM 565-0a	Wiper	VI	182	
DS 565-0a	Wiper	VI	185	
DS 565-0c	Wiper	VI	186	
DS 565-0d	Wiper	VI	-	
DS 565-04a	Linkage	VI	-	
DM 565-06	Spindle	VI	182	
DM 565-07	Linkage	VI	-	
DS 565-2b	Brush	VI	182-185	
DS 565-2c	Brush	VI	-	
DS 565-2d	Brush	VI	186	
DS 565-2e	Brush	VI	-	
DM 565-4	Linking rod	VI	182	
DM 565-4a	Linking rod	VI	-	
D 565-5a	Bracket	VI	-	
DM 565-5	Bracket	VI	-	
DS 565-5	Bracket	VI	185	
DS 565-5a	Bracket	VI	-	
DS 565-5b	Bracket	VI	186	
DS 565-5c	Bracket	VI	-	
DS 565-7a	Rod	VI	-	
DS 565-10b	Holder	VI	182-185	
DS 565-10c	Holder	VI	-	
DS 565-10d	Holder	VI	186	
DS 565-10e	Holder	VI	-	
DS 565-12	Blade	VI	182-185	
DS 565-12a	Blade	VI	186	
D 565-13	Bracket	VI	182	
DM 565-14	Swivel plate	VI	-	
DM 565-18	Linking rod	VI	-	
DS 565-18	Linking rod	VI	185	
DS 565-23	Linking rod	VI	-	
D 565-58	Rubber bush	VI	182-201-206-213	
DS 565-65	Rod	VI	186	
DS 565-66	Link	VI	185	
DS 565-66a	Link	VI	-	

NUMBER	DESCRIPTION	Section	PAGE No.	REMARKS
DS 565-67	Clamp	VI	185	
D 565-68	Pin	VI	182	
D 565-70	Clip	VI	-	
DS 565-70	Clip	VI	185	
DS 565-70a	Clip	VI	186	
D 565-73	Sealing ring		182	
DM 565-80	Stud		-	
DS 565-89	Backplate	VI	185	
DS 565-93	Bush	Vi	186	
DS 565-94	Nut	VI	-	
D 565-96	Sealing cap	VI	182-185	
DS 565-96	Sealing cap	VI	186	
DS 565-97	Circlip	VI	-	
DS 565-102	Buffer		-	
D 565-104	Distance bush		182-201-206-213	
D 565-105	Pipe	VI	182	
DS 565-113	Handle	VI	185	
D 565-115	Washer	VI	182-201-206-213	
DS 565-117a	Stop		182-185-186-270	
DM 571-3a	Horn	VI	179	
DM 571-4	Horn	VI	-	
DS 571-97	Support		-	
DM 571-98	Support plate		-	
DM 571-99	Support		-	
DS 571-99	Support		-	
D 575-1	Light	VI	169	
D 575-1a	Light	VI	-	
DS 575-1j	Light	VI	-	
DS 575-1k	Light	VI	-	
DS 575-1p	Light	VI	-	
DS 575-1q	Light	VI	-	
DF 575-2	Light	VI	169-174	
DF 575-2a	Light	VI	-	
DF 575-2b	Light	VI	-	
DF 575-2c	Light	V~	-	
DF 575-4	Light	VI	-	
DF 575-4a	Glass	VI	-	
DF 575-8	Joint	VI	169-170-174-177	
DF 575-8a	Joint	VI	-	
DF 575-8b	Joint	VI	-	
DM 575-8	Rubber joint	VI	174	
DM 575-13	Glass	VI	-	
DM 575-24	Lamp	VI	-	
DF 575-26	Collar	VI	169-170-174-177	
DM 575-26	Collar	VI	174	
DM 575-66	Housing		-	
DM 575-66a	Housing		-	
DM 575-100a	Housing	VI	177	
DM 576-02a	Switch	VI	170-177	

NUMBER	DESCRIPTION	Section	PAGE No.	REMARKS
DS 576-02	Switch	VI	170-177	
DS 576-02a	Switch	VI	-	
DS 576-02b	Switch	VI	170	
DS 576-84	Screw		170-177	
DV 578-2	Number plate		194	
DV 578-93	Support			
DF 579-1	Reflector	VI	170-177	
DS 579-la	Reflector	VI	177	
DV 579-94a	Support	VI	-	
DM611-1	Mechanism		-	
DM611-1a	Anti-theft	VI	89	
DM641-10	Bracket		73	
DM611-11	Housing	VI	89	
DS 611-12	Switch	VI	-	
DS 611-53	Locknut	VI	-	
DM611-54	Backplate	VI	-	
DS 611-55	Screw	VI	-	
DS 611-56	Bush	VI	-	
DS 611-57	Clamp	VI	-	
DS 611-58	Screw	VI	-	
DS 611-59	Plunger	VI	-	
DS 611-73a	Nut	VI	-	
DM611-74	Distance piece	VI	73	
DM611-75	Bracket		-	
DM611-79	Spring	VI	-	
DM611-82	Stud	VI	-	
DM611-86	Screw	VI	89	
DS 611-90	Barrel	VI	73	
DM611-98	Bolt			
DF 614-02	Switch	VI	142	
DF 614-02a	Switch	VI	153	
DV 614-02c	Switch	VI	-	
DM615-01	Bumper		189	
DM615-Ole	Bumper		193	
DS 615-01a	Bumper		189	
DS 615-01b	Bumper		190	
DS 615-01c	Bumper		193	
DF 615-3a	Bumper		194	
DF 615-3b	Bumper		-	
DM615-13	Bumper		189	
DS 615-13a	Bumper		-	
DS 615-13b	Bumper		190	
DS 6l5-13c	Bumper		193	
DM615-14	Half bumper bar		189	
DM615-14a	Half bumper bar		-	
DS 615-14b	Half bumper bar		-	
DS 615-14c	Half bumper bar		-	
DS 615-14d	Half bumper bar		190	
DS 615-14e	Half bumper bar		-	

NUMBER	DESCRIPTION	Section	PAGE No.	REMARKS
DS 615-14j	Half bumper bar		193	
DS 615-14k	Half bumper bar		-	
D 615-16	Number plate		189-190	
DS 615-16	Plate		193	
DM 615-17	Bracket		189	
DM 615-17a	Bracket		-	
DS 615-17b	Bracket		190	
DS 615-17c	Bracket		-	
DS 615-17d	Bracket		193	
DS 615-17e	Bracket		-	
DM 615-18	End bracket		189	
DM 615-18a	End bracket		-	
DS 615-18	End bracket		-	
DS 615-18a	End bracket		-	
DS 615-18d	End bracket	VI	190	
DS 615-18e	End bracket	VI	-	
DS 615-18f	End bracket		193	
DS 615-18g	End bracket		-	
DV 615-22	Stop	VI	194	
DS 615-47	Stop	VI	193	
DS 615-47a	Stop	VI	-	
DS 615-48	Stop	VI	-	
DM 615-49	Cover joint	VI	-	
DS 615-49	Cover joint	VI	-	
DM 615-55	Bracket		189	
DM 615-SSa	Bracket		-	
DS 615-55	Bracket		190	
DS 615-55a	Bracket		-	
DS 615-56b	Bracket		193	
DS 615-56c	Bracket		-	
DM 615-57	Reinforcement plate		189-190	
DS 615-57	Reinforcement plate		193	
DS 615-65b	Plate		-	
DS 615-65c	Plate		-	
D 615-68	Beading		189-190	
DF 615-71	Support		194	
D 615-73	Washer		189	
DF 615-80	Reinforcement		194	
DF 615-80a	Reinforcement		-	
DS 615-82	Packing		193	
DV 615-88	Support		224	
DV 615-90a	Blade		194	
DF 615-90b	Blade		-	
DM 615-98	Bracket		189-190	
DM 615-98a	Bracket		-	
DF 615-109	Support		194	
DF 615-110	Support		-	
DV 615-116	Panel		-	
DS 616-87	Ring	VI	271	

NUMBER	DESCRIPTION	Section	PAGE No.	REMARKS
DS 616-88	Plate		271	
DS 616-94	Washer	VI	-	
DS 616-97	Plate		-	
DS 621-1	Spanner	VI	214	
DS 621-3	Embellisher removing tool		-	
D 622-4	Strap		-	
DS 622-4	Strap		-	
D 622-6	Strap		-	
DS 622-7	Stand		-	
D 622-8	Pin		216-220	
DS 622-55	Spanner		214	
DS 622-97c	Support		50-214	
DS 622-99	Bracket		49-214	
D 622-106	Disc	VI	214	
D 623-61	Gusset		224	
D 623-61a	Gusset		-	
DS 625-1	Support		231	
DS 625-96a	Strap		214-228	
DM 641-0	Blower	VI	213	
DA 642-01	Valve	VI	201	
DM 642-01	Valve	VI	-	
DM 642-01a	Valve	VI	206	
DM 642-02	Group	VI	201	
DS 642-02	Group	VI	206	
DW 642-02	Group	VI	201-213	
DM 642-04	Bulb	VI	201-206	
DM 642-011	Radiator	VI	201-213	
DS 642-011	Radiator	VI	206	
DM 642-012	Motor	VI	201	
DS 642-012	Motor	VI	201-206-213	
DM 642-1	Radiator	VI	197	
DM 642-la	Radiator	VI	-	
DM 642-8	Indicator plate	VI	-	
DM 642-8a	Indicator plate	VI	201-206	
DM 642-8b	Indicator plate	VI	- -	
DM 642-8c	Indicator plate	VI	- -	
DA 642-9	Plate		9-201	
DM 642-9b	Connection		9-197	
DM 642-9c	Plate		9-201-206	
DS 642-9	Pipe		201-206	
DM 642-10	Indicator plate	VI	197-201-206	
DM 642-13	Indicator plate	VI	- - -	
DM 642-14	Indicator plate	VI	201-206	
DM 642-14a	Indicator plate	VI	- -	
DM 642-14b	Indicator plate	VI	- -	
DM 642-19	Impeller	VI	201	
DS 642-19	Impeller	VI	201-206-213	
DM 642-20	Bracket	VI	201	
DS 642-20	Half shell	VI	206	

NUMBER	DESCRIPTION	Section	PAGE No.	REMARKS
DM 642-20a	Support	VI	201-213	
DM 642-21	Housing	VI	- -	
DM 642-22	Volute	VI	- -	
DM 642-30	Plate	VI	201	
DM 642-31	Joint	VI	202	
DS 642-48	Support		206	
DF 642-50	Panel		213	
DM 642-51a	Screw	VI	206	
DM 642-63	Bracket		202	
DS 642-63	Half shell	VI	206	
DM 642-68	Bracket		197-202	
DS 642-71a	Plate		202-206	
DS 642-73a	Plate		-	
DS 642-73b	Plate		206	
DS 642-75	joint	VI	202-206	
DM 642-78	Plate	VI	213	
DF 642-79	Pipe	VI	-	
DF 642-80	Pipe		-	
D 642-81	Plate		-	
DF 642-81	Angle plate		-	
D 642-82	Backplate		-	
DA 642-83	Joint	VI	202	
DA 642-84	Pipe		-	
DM 642-84	Pipe		197	
DS 642-84d	Pipe		206	
DF 642-85	Pipe		213	
DM 642-85	Pipe		202-206	
DA 642-86	Pipe		202	
DM 642-86a	Pipe		197	
DM 642-86b	Pipe		-	
DF 642-87	Pipe	VI	213	
DM 642-93	Body	VI	206	
DS 642-96	Pipe		202-206	
DM 642-100	Washer	VI	209	
DM 643-02	Grille		197-202-209	
DM 643-03	Grille		- - -	
DA 643-1	Duct	VI	213	
DF 643-1	Duct	VI	-	
DF 643-2	Duct		-	
DM 643-2	Duct		197	
DM 643-2a	Duct		202	
DF 643-4	Duct		213	
DM 643-4	Duct		197	
DM 643-4a	Duct		202	
DM 643-5	Duct		197-202	
DS 643-5	Duct		209	
DS 643-6	Duct	VI	197-209	
DM 643-10c	Duct		209	
DM 643-10d	Duct		-	

NUMBER	DESCRIPTION	Section	PAGE No.	REMARKS
DM 643-17	Duct		197	
DM 643-17a	Duct			
DM 643-17d	Duct		198-202	
DM 643-17e	Duct		- -	
DM 643-17f	Duct		197	
DM 643-17g	Duct			
DM 643-17h	Duct		198-209	
DM 643-17i	Duct		- -	
DM 643-19	Grille	VI	202	
DS 643-19	Grille		197-209	
DA 643-45	Duct		213	
DS 643-50	Plate		197-209	
DM 643-52	Duct		- -	
DM 643-52a	Duct		202	
DS 643-52	Duct		209	
DS 643-53	Plate		197	
DS 643-53a	Plate		197-209	
DM 643-57	Connection		197	
DM 643-57a	Connection		-	
DS 643-57	Duct		197-209	
DF 643-64	Plug	VI	213	
DB 643-82	Duct	VI	-	
DM 643-82a	Duct	VI	197-202-209	
DM 643-88	Grille		- - -	
D 643-89	Sealing	VI	- - -	
DM 643-91	Duct		197	
DM 643-91a	Duct		202	
DM 643-91c	Duct		197	
DS 643-103	Duct	VI	197-209	
DB 643-104	Nozzle		213	
DM 643-112	Clip	VI	197-202	
DM 643-115	Connection		198-202-209	
DM 643-116	Duct		- - -	
DA 643-117	Plate		198-202-213	
DM 643-117	Plate		198-202-209	
DM 643-119	Plate		- - -	
DM 643-137	Duct		213	
DE 643-138	Distributor		-	
DM 644-02	Shutter		198-202-209	
DM 644-02a	Shutter		- - -	
DM 644-2a	Shutter		- - -	
DM 644-10	Control		- - -	
DM 644-17	Control		198-202	
DM 644-17a	Control		209	
DM 644-18	Control		198-202-209	
DM 644-55	Spring		- - -	
DM 644-55a	Spring		- - -	
DM 644-61	Shutter		198	
DM 644-61a	Shutter		202-209	

NUMBER	DESCRIPTION	Section	PAGE No.	REMARKS
DM 644-66	Cable	VI	198-209	
DM 644-68	Guide	VI	198-202-209	
DM 644-68a	Guide	VI	202-209	
DM 644-70	Distance piece		202-209-213	
DS 644-70	Distance piece	VI	209	
D 644-84	Knob	VI	198-205-209	
DM 644-84	Cable	VI	198-205-209	
DM 644-86	Lever		- - -	
DM 644-87	Lever		- - -	
DM 644-91	Lever		198	
DM 644-91a	Lever		205-209	
DM 644-94	Cable	VI	198-205-209	
DM 644-102	Spring		50-198-205-209	
DM 644-110	Guide		198-205-209	
DM 644-111	Shutter		198-205-210	
DM 644-112	Shutter		- -	
DM 644-114	Guide	VI	205-210	
DM 644-123	Lining	VI	198-205-210	
DM 651-2	Glove box		145-153	
DM 651-3a	Cover		145-153-258	
DM 651-5a	Glove box		145-153	
DM 651-6a	Cover		145-153-261	
DM 651-62b	Knob	VI	145-153	
DM 651-82	Circlip		- -	
DM 651-89	Spring		- -	
DM 651-91	Buffer		- -	
DM 651-92	Screw	VI	- -	
DM 652-2	Ashtray	VI	- -	
D 652-78	Fixing plate	VI	- -	
DM 652-78	Fixing plate	VI	- -	
DM 653-0a	Telephone	VI	181	
DW 653-01	Aerial	VI	-	
DF 653-05	Assembly	VI	-	
DW 653-1	Suppressor	VI	-	
DW 653-10	Loudspeaker	VI	-	
DF 653-11	Support		-	
DW 653-47	Surround		-	
DM 653-51	Plate	VI	-	
DW 653-55	Grille	VI	-	
DW 653-56	Joint	VI	-	
DW 653-57	Protector		-	
DW 653-59	Protector	VI	-	
DW 653-69	Cover	VI	-	
DF 653-81	Plate	VI	-	
DF 653-81a	Plate	VI	-	
DM 653-82	Stop	VI	-	
DF 661-85	Screw	VI	239	
DF 661-86	Screw	VI	-	
DF 661-87	Lining	VI	-	

NUMBER	DESCRIPTION	Section	PAGE No.	REMARKS
DF 661-88	Spring	VI	239	
DF 661-89	Packing			
DF 661-90	Packing			
DF 661-91	Washer	VI	-	
DF 661-92	Packing	VI	-	
DF 661-92a	Packing	VI	-	
DF 661-93	Support	VI	-	
DF 661-94	Support	VI	-	
DF 661-95	Rod	VI	-	
DF 661-96	Ring			
DF 661-97	Ring			
DF 661-98	Crossmember	VI	-	
DF 661-99	Crossmember			
DF 741-04	Front unit		216	
DF 741-04a	Front unit			
DF 741-04d	Front unit		220	
DM 741-04k	Front unit			
DF 741-3	Front unit		216	
DF 741-3a	Front unit			
DM 741-3b	Front unit		220	
DM 741-3c	Front unit			
D 741-5	Sidemember		216	
D 741-5a	Sidemember			
DS 741-5	Sidemember		220	
DS 741-5a	Sidemember			
D 741-7	Crossmember		216	
DS 741-7a	Crossmember		220	
DM 741-50b	Extension			
DM 741-50c	Extension			
DS 741-50b	Extension			
DS 741-50c	Extension			
D 741-58	Panel		216-220	
D 741-58a	Panel		- -	
DS 741-58b	Panel		220	
DS 741-58c	Panel			
D 741-59	Panel		216-220	
D 741-59a	Panel		- -	
D 741-77	Crossmember		216	
DS 741-78	Distance piece		220	
DM 741-91c	Siderail			
DM 741-91d	Siderail			
DS 741-91a	Siderail			
DS 741-91b	Siderail		-	
D 741-99	Panel		216	
DS 741-99	Panel		220	
D 741-100a	Sidemember		216	
DM 741-100	Sidemember		216-220	
DM 741-100a	Sidemember			
D 741-106	Panel		216	

NUMBER	DESCRIPTION	Section	PAGE No.	REMARKS
D 741-108	Felt packing		216	
D 741-109	Felt packing		216-220	
DB 742-01a	Rear unit		224	
DF 742-01	Rear unit			
DF 742-01a	Front unit			
D 742-97	Panel		-	
DF 742-97	Panel		-	
DB 743-1	Sidemember			
DB 743-la	Sidemember			
DB 743-lb	Sidemember			
DB 743-ic	Sidemember			
DF 743-1	Sidemember			
DF 743-1a	Sidemember			
D 743-2	Crossmember			
DS 743-2	Crossmember			
DE 743-87	Lining			
DF 743-87a	Lining			
D 743-90	Rubber strip		216-220-224	
D 743-91	Rubber strip	VI	- -	
D 743-98	Closing panel			
DB 744-2	Panel		224	
DM 744-3	Panel			
DS 744-3	Panel			
DA 744-15	Panel		266-276	
DA 744-16	Panel		-	
DA 744-19	Panel			
DA 744-24	Panel			
DC 744-34a	Panel		266	
DF 744-34	Panel			
DB 744-35	Support		-	
DC 744-35	Support			
DB 744-36	Panel			
DB 744-37	Panel		-	
DB 744-38	Stop			
DA 744-39	Crossmember			
DB 744-39	Crossmember			
DB 744-40	Crossmember			
DB 744-41	Crossmember			
DB 744-41a	Crossmember			
DB 744-47	Stop	VI	-	
DB 744-48	Panel		266-276	
DB 744-49	Panel		-	
DF 744-75	Plate		266	
DF 744-76	Plate			
DF 744-80	Sealing strip		-	
DC 744-103	Pin	VI	-	
DB 744-104	Spring	VI	-	
DS 744-128	Rubber plug		216-220-224	
DS 744-129	Plug	-	-	

NUMBER	DESCRIPTION	Section	PAGE No.	REMARKS
DC 744-138	Hinge	VI	266	
DB 744-139	Hinge		-	
DC 744-143	Hinge	VI	-	
DB 744-166	Panel		-	
DB 744-166a	Panel		-	
DB 744-176	Packing		-	
DB 744-179	Stop	VI	-	
DM 811-2	Sidemember right		216-223-224	
D 811-2a	Sidemember left		216-220-224	
D 811-67	Cant rail		239	
DF 811-75	Extension		224-239	
DF 811-86a	Extension		- -	
D 811-94	Cant rail		239	
D 811-99	Cant rail		-	
D 812-1	Centre pillar		224	
D 812-la	Centre pillar		-	
DF 812-2	Centre pillar		-	
DF 812-2a	Centre pillar		-	
D 812-72	Closing panel		216-223	
D 812-72a	Closing panel		- -	
D 812-73	Closing panel		-	
D 812-73a	Closing panel		-	
D 812-88	Front pillar		-	
D 812-88a	Front pillar		-	
D 812-90	Front pillar		-	
D 812-90a	Front pillar		-	
D 813-3	Crossmember		224	
DF 813-9	Crossmember		-	
DF 813-50	Crossmember		227	
DF 813-101	Panel		-	
DF 813-102	Panel		-	
DF 813-102a	Panel		-	
DM 814-64	Gusset		216-223	
D 814-88a	Gusset		- -	
D 814-95	Gusset		227	
D 814-95a	Gusset		-	
D 814-97	Reinforcement		-	
D 814-97a	Reinforcement		-	
DF 821-73	Panel		-	
DF 821-73a	Panel		-	
DF 821-74	Wheel arch		-	
DF 821-74a	Wheel arch		-	
DM 822-03b	Protective cross piece		258-261	
DM 822-04	Cover	VI	258	
DM 822-04a	Cover	VI	261	
DM 822-04b	Cover	VI	258	
DM 822-04c	Cover	VI	261	
DM 822-05	Surround	VI	258	
DM 822-05a	Surround	VI	261	

NUMBER	DESCRIPTION	Section	PAGE No.	REMARKS
DM 822-2	Side panel		219-253	
DM 822-2a	Side panel		- -	
DM 822-2b	Side panel		- -	
DM 822-2c	Side panel		- -	
D 822-3	Panel		- -	
DM 822-13b	Cover		258	
DM 822-31	Finishing strip		261	
DM 822-52	Robber buffer		258-261	
DA 822-53	Cover		258	
DM 822-53	Cover		-	
DM 822-53a	Cover		261	
DM 822-54b	Facia panel		-	
DM 822-54e	Facia panel		258	
DM 822-54f	Facia panel		-	
DM 822-54g	Facia panel		261	
DM 822-64	Plate		258-261	
DA 822-65	Finishing strip	VI	256	
DA 822-65b	Finishing strip	VI	-	
DB 822-65	Finishing strip	VI	-	
DC 822-65	Finishing strip	VI	-	
DM 822-65c	Finishing strip	VI	-	
DM 822-65f	Finishing strip	VI	257	
DM 822-65p	Finishing strip	VI	256	
DM 822-65r	Finishing strip	VI	-	
DM 822-65s	Finishing strip	VI	-	
DM 822-65v	Finishing strip	VI	257	
DM 822-65w	Finishing strip	VI	256	
DM 822-65x	Finishing strip	VI	-	
DM 822-65z	Finishing strip	VI	-	
DM 822-67	Finishing moulding		258	
PM 822-67a	Finishing moulding		261	
DM 822-67c	Finishing moulding		258	
DM 822-67d	Finishing moulding		261	
DM 822-75	Protection rubber strip		258-261	
DM 822-76a	Support		261	
DM 822-76b	Support		258	
DM 822-76e	Support		-	
DM 822-76f	Support		261	
DM 822-82	Finishing strip	VI	256	
DM 822-82a	Finishing strip	VI	-	
DM 822-82b	Finishing strip	VI	-	
DM 822-82c	Finishing strip	VI	-	
DM 822-82d	Finishing strip	VI	-	
DM 822-82e	Finishing strip	VI	-	
DM 822-82f	Finishing strip	VI	-	
DM 822-82g	Finishing strip	VI	-	
DM 822-82h	Finishing strip	VI	-	
DM 822-115a	Finishing strip	VI	257	
DM 822-115b	Finishing strip	VI	-	

NUMBER	DESCRIPTION	Section	PAGE No.	REMARKS
DM 822-115c	Finishing strip	VI	257	
DM 822-115e	Finishing strip	VI	-	
DM 822-115f	Finishing strip	VI	-	
DM 822-140	Finishing strip	VI	256	
DM 822-141	Facia panel		258	
DM 822-141a	Facia panel		261	
DM 822-141c	Facia panel		258	
DM 822-141d	Facia panel		261	
DF 825-3	Roof		239	
DF 825-67	Sealing strip	VI	-	
DS 825-75	Plate	VI	-	
D 825-90	Washer		-	
DF 825-91	Sealing strip		-	
D 825-92	Screw	VI	289-243-276	
D 825-92a	Screw		239	
DM 826-55	Sealing strip	VI	266	
DF 831-01b	Panel		130	
DS 831-Ole	Panel		-	
DF 831-02	Panel		-	
DF 831-02a	Panel		-	
DS 831-02c	Panel		-	
DF 831-1	Panel		219	
DF 831-la	Panel		-	
DS 831-la	Panel		223	
DM 831-97a	Panel		-	
DS 841-02	Door front		243	
DS 841-02a	Door front		-	
D 841-8	Flexible stop		-	
D 841-15	Sealing strip		-	
DM 841-16	Sealing strip	VI	-	
DS 841-22	Sealing strip	VI	-	
DF 841-49	Reinforcement		-	
DF 841-49a	Reinforcement		-	
DS 841-56	Shim		-	
DS 841-56a	Shim		-	
DS 841-56b	Shim		-	
D 841-57	Protective strip		278	
D 841-57a	Protective strip		-	
D 841-58	Retaining plate		243	
D 841-60	Shim		-	
D 841-60a	Shim		-	
D 841-66	Retaining strip		-	
D 841-66a	Retaining strip		-	
D 841-67	Sealing piece		-	
D 841-67a	Sealing piece		-	
D 841-79	Retaining strip		-	
D 841-79a	Retaining strip		-	
D 841-81	Sealing strip		-	
D 841-81a	Sealing strip		-	

NUMBER	DESCRIPTION	Section	PAGE No.	REMARKS
D 841-82	Clamp		243	
D 841-83	Spring		-	
D 841-87	Stop	VI	-	
DS 841-90	Bracket		-	
DS 841-90a	Bracket		-	
D 841-91	Sealing block		-	
D 841-91a	Sealing block		-	
D 841-92	Bracket		-	
D 841-93	Screw		-	
DS 842-04	Rear door		-	
DS 842-04a	Rear door		-	
D 842-3	Check strap		-	
D 842-5	Spring		-	
D 842-15	Robber seal		-	
DM 842-16	Lining	VI	-	
DS 842-20	Lining	VI	-	
D 842-56	Protecting strip		278	
D 842-56a	Protecting strip		-	
D 842-60	Fixing plate		243	
D 842-61	Seal		-	
D 842-61a	Seal		244	
D 842-66	Pin		-	
D 842-67	Washer		-	
D 842-68	Roller	VI	-	
D 842-71	Roller pin		-	
DF 842-73	Retaining strip		-	
DF 842-73a	Retaining strip		-	
D 842-74	Retaining strip		-	
D 842-74a	Retaining strip		-	
DF 842-78	Check strap		-	
DF 842-79	Retaining strip		-	
DF 842-88	Seal		-	
DF 842-88a	Seal		-	
DF 842-105	Reinforcement		-	
DF 842-105a	Reinforcement		-	
DF 844-07	Hinge		262	
DF 844-07a	Hinge		-	
DF 844-27	Stay	VI	-	
DF 844-28	Anchor peg	VI	-	
DF 844-45	Door		-	
DF 844-48	Stay	VI	-	
DF 844-48a	Stay	VI	-	
DF 844-49	Support		-	
DF 844-56	Stay	VI	-	
DF 844-60	Hinge	VI	-	
DF 844-82	Lockplate		-	
DF 844-84	Distance piece		-	
DF 844-87	Seal		-	
DF 844-89	Seal		-	

NUMBER	DESCRIPTION	Section	PAGE No.	REMARKS
DF 844-90	Washer		262	
DF 844-98	Hinge	VI	-	
DF 844-102	Support		-	
DF 844-103	Pin		-	
DF 844-128	Packing		-	
DF 844-138	Pin		-	
DF 844-139	Spring	VI	-	
DF 844-142	Stop	VI	-	
DF 844-143	Distance piece	VI	-	
DF 844-158	Door		-	
DF 844-159	Pin	VI	-	
DF 844-160	Washer	VI	-	
DF 844-162	Stop	VI	-	
DF 844-165	Reinforcement	VI	-	
DF 844-166	Reinforcement	VI	-	
D 851-4	Mud flap		228-231	
DF 851-48	Mud flap		232	
DF 851-48a	Mud flap		-	
DF 851-51	Seal		-	
D 851-52	Bracket		228	
D 851-52a	Bracket		-	
DS 851-57	Seal		231	
D 851-58	Washer		228	
DM 851-60d	Front wing		-	
DS 851-60a	Front wing		-	
DS 851-60f	Front		231	
DS 851-60g	Front wing		-	
D 851-61	Washer		228-231	
DS 851-62	Bracket		-	
DS 851-63	Spring		-	
DF 851-67	Rear wing		232	
DF 851-67a	Rear wing		-	
D 851-68	Rubber sealing strip		-	
D 851-70	Bracket		-	
D 851-72	Rubber block		-	
D 851-78	Spigot		232	
DS 851-79	Lining		228-231	
DF 851-81	Seal		232	
DF 851-82	Seal		-	
D 851-83	Rubber sealing strip		228-231	
DS 851-86	Screw		-	
D 851-89	Rubber bush		228-231	
D 851-91	Internal support		228	
DF 851-91	Reinforcement		232	
DF 851-94	Plate	VI	-	
D 851-113	Plate		228-231	
D 851-122	Plate		232	
DF 851-127	Mud flap		-	
DF 851-128	Panel		-	

NUMBER	DESCRIPTION	Section	PAGE No.	REMARKS
D 851-132	Rubber seal		228	
D 851-133	Supporting plate		-	
D 851-133a	Supporting plate		-	
D 851-134	Plate		-	
D 851-135	Plate		-	
D 851-136	Closing plate		-	
DS 851-139	Seal	VI	231	
DS 851-139a	Seal	VI	-	
DS 851-142a	Seal		231	
DF 851-144	Plate		232	
DS 851-149	Bracket		228-231	
DS 851-151	Plate		-	
DF 851-157	Plate		232	
DF 851-158	Support		-	
DF 851-159	Support		227	
DS 852-07	Hinge mechanism		235	
DS 852-07a	Hinge mechanism		-	
DS 852-2b	Bonnet		-	
DS 852-2c	Bonnet		-	
DS 852-52	Plate		-	
D 852-64	Bracket		-	
D 852-64a	Bracket		-	
D 852-69	Rubber buffer		-	
DM 852-91	Rubber stop		228-231	
DM 852-92	Stop		235	
DS 852-106	Stay		-	
D 852-116	Rubber sealing strip		-	
DS 852-122	Retaining catch		-	
DS 852-122a	Retaining catch		-	
DS 852-123	Catch		-	
D 852-124	Sealing strip		-	
DS 852-126	Securing strip		-	
DS 852-128	Pin		-	
D 853-1a	Finishing panel		219	
DM 853-50	Finishing panel		261	
DM 853-69a	Finishing plate		258-261	
DM 853-76a	Panel		258	
DM 853-76b	Panel		261	
DM 853-78	Finishing plate		258	
DS 853-81	Seating rubber		232-244	
DS 853-84	Seal		223	
DS 853-87	Panel		-	
DS 853-87a	Panel		-	
DM 853-90	Covering strip		219	
DS 853-99	Panel		223	
DM 854-3a	Embellisher		214	
DM 854-3b	Embellisher		-	
DM 854-4	Chevron		262	
DF 854-50	Beading	VI	-	

NUMBER	DESCRIPTION	Section	PAGE No.	REMARKS
DF 854-51a	Beading	VI	232	
DF 854-52	Finisher		262	
DF 854-52a	Finisher		-	
DF 854-67	Seal		-	
DM 854-71	Finishing strip		239	
DS 854-73	Clip		-	
DS 854-77	Washer		262	
DM 854-82	Finishing strip		239	
DM 854-82a	Finishing strip		-	
DF 854-85	Finishing strip		239-262	
DM 854-91	Cover joint		239	
DM 854-93	Moulding		-	
DM 854-93a	Moulding		-	
DF 854-94	Moulding		-	
DF 854-94a	Moulding		-	
DM 854-100	Finishing strip		-	
DF 854-103	Moulding		-	
DF 854-104	Moulding		-	
DF 854-104	Moulding		-	
DF 854-104	Moulding		-	
DF 854-104c	Moulding		-	
DF 854-105	Moulding		-	
Dl' 854-105	Moulding		-	
DF 854-105	Moulding		240	
DF 854-105c	Moulding		-	
D 861-05	Safety catch		235	
D 861-5	Lock	VI	247	
D 861-7	Lock	VI	-	
D 861-7a	Lock	VI	-	
DS 861-8	Handle		-	
DS 861-8a	Handle		-	
D 861-9	Lock	VI	-	
DS 861-13	Set of lock barrels	VI	38-42-142-150-247-262	
D 861-16	Spring	VI	247	
DS 861-18	Push button	VI	247-262	
DS 861-19a	Push button	VI	247	
DS 861-21	Spring		247-262	
Dl' 861-22	Lock		262	
D 861-23	Locking plate		247	
D 861-24	Handle		-	
D 861-24a	Handle		-	
DM 861-24	Handle		-	
DM 861-24a	Handle		-	
DS 861-33	Circlip	VI	247-262	
D 861-34	Spring		262	
D 861-36	Bolt		235	
D 861-37	Lock		-	
D 861-37a	Lock		-	

NUMBER	DESCRIPTION	Section	PAGE No.	REMARKS
D 861-38	Control		235	
D 861-51	Washer		262	
D 861-53	Pin		-	
D 861-59	Guide		-	
D 861-62	Pin		247	
D 861-63	Spring		-	
D 861-70	Control rod		-	
D 861-74	Washer		-	
DS 861-76	Handle		-	
DS 861-76a	Handle		-	
D 861-79b	Striking plate	VI	-	
D 861-79c	Striking plate	VI	-	
DF 861-79	Hook	VI	265	
D 861-84	Washer	VI	247	
D 861-98	Screw		-	
D 861-98a	Screw		247-265	
D 861-100	Spring	VI	247	
D 861-101	Nut		247-265	
D 861-102	Locking pin	VI	-	
D 861-104	Lockwasher		265	
D 861-105	Nut		-	
DF 861-107	Housing		-	
DF 861-109	Plate		-	
D 861-116	Plate	VI	247	
D 861-117	Locking finger		-	
DM 861-117	Locking finger	VI	-	
D 861-118	Washer	VI	-	
D 861-119	Screw		-	
D 861-120	Washer	VI	-	
D 861-121	Escutcheon		-	
D 861-122	Cup		235	
D 861-123	Spring		-	
DS 861-132	Cup	VI	247	
Dl' 861-133	Support	VI	265	
D 861-136	Spring		235	
D 861-149	Plate		247	
D 861-150	Lever		235	
D 861-151	Cable	VI	-	
D 861-154	Plate		-	
D 861-155	Fixing plate		-	
D 861-157	Sheath	VI	153	
DS 861-157	Sheath	VI	-	
D 861-158	Adjusting plate	VI	247	
D 861-158	Adjusting plate	VI	-	
D 861-159	Anti-rattle sleeve	VI	235	
D 861-162	Spring		-	
DS 861-16S	Control		-	
DS 861-16S	Control		-	
DS 861-166	Sealing bush		-	

NUMBER	DESCRIPTION	Section	PAGE No.	REMARKS
DM 861-167	Trunnion	VI	235	
DF 861-169	Lever	VI	265	
DF 861-170	Pin	VI	-	
DF 861-180	Support		-	
DF 861-181	Housing		-	
DF 861-182	Panel		-	
DS 861-189	Plate		231	
DB 863-12	Locator		266	
DB 863-31	Spring	VI	-	
DB 863-61	Packing		-	
DB 863-61a	Packing		-	
D 912-4	Lever		272	
D 912-4a	Lever		-	
DM 912-4	Lever		-	
D 912-10	Knob	VI	272-275	
DS 912-62	Frame	VI	272	
D 912-66	Lining	VI	-	
D 912-78	Support		-	
0 912-79	Support		-	
D 912-80	Seat stop		-	
D 912-85	Spring		-	
DS 922-10	Seal	VI	275	
DF 922-12	Lever	VI	-	
DF 922-12a	Lever	VI	-	
DF 922-13	Pin	VI	-	
DF 922-42	Spring case		276	
DF 922-42a	Spring case		-	
DF 922-47	Spring case		277	
DF 922-49a	Slide	VI	275	
DF 922-50a	Slide	VI	-	
DS 922-53	Lining		277	
DB 922-53c	Lining		-	
DF 922-56	Lining		-	
DS 922-58	Lining		-	
DB 922-58c	Lining		-	
DC 922-59	Panel		275	
DF 922-62	Frame		-	
DS 922-62	Frame		-	
DF 922-114a	Cable	VI	-	
DF 922-115b	Slide	VI	-	
DF 922-118	Support	VI	-	
DF 922-118a	Support	VI	-	
DM 922-118	Support		272	
DM 922-118a	Support		-	
DM 922-119	Seat stop	VI	-	
DF 922-135	Plug	VI	276	
DB 922-146	Panel		275	
DB 922-147a	Seal		-	
DB 922-147b	Seal		-	

NUMBER	DESCRIPTION	Section	PAGE No.	REMARKS
DF 922-147b	Lining		275	
DF 9Z2-164	Spring	VI	-	
DF 922-169	Roller	VI	-	
DF 922-178	Panel		276	
DF 922-183	Stop	VI	275	
DB 923-2b	Seal		277	
DS 923-2	Seal		-	
DS 923-2a	Seal		-	
DB 923-5	Frame		-	
DB 923-5a	Frame		276	
DB 923-10	Frame		-	
DS 923-10	Spring case		-	
DS 923-11	Seal		277	
DB 923-11b	Seal		-	
DB 923-20	Crossmember	VI	227-276	
D 923-90a	Flexible bush	VI	276	
DB 923-97	Panel		-	
DB 923-120	Pin		269	
DE 923-130	Panel		276	
DB 923-130a	Panel		-	
DS 932-011	Seat		272	
DS 932-011a	Seat		-	
DS 932-3	Lining		277	
DS 932-3a	Lining		-	
DS 932-7	Lining		-	
DS 932-7a	Lining		-	
DS 932-9a	Knob	VI	269-272-276	
DS 932-24	Control	VI	272	
DS 932-24a	Control	VI	-	
DA 932-35	Frame		276	
DA 932-36	Frame		-	
DA 932-44	Frame		-	
DA 932-45	Frame		-	
DA 932-52	Stay		269-276	
DS 932-76b	Lining		272	
DS 932-79a	Panel		-	
DS 932-81a	Hinge pin		-	
DS 932-81b	Hinge pin		-	
DS 932-82	Pressure pad	VI	-	
DS 932-82a	Pressure pad	VI	-	
DS 932-84	Spring case		-	
DS 932-84a	Spring case		-	
DS 932-84c	Spring case		-	
DS 932-90	Spring case		-	
DS 932-90a	Spring case		272-275	
DS 932-99b	Nylon casing	VI	272	
DS 932-99c	Nylon casing	VI	-	
DS 932-118	Packing piece		-	
DS 932-119	Spring		-	

NUMBER	DESCRIPTION	Section	PAGE No.	REMARKS
DS 932-119	Spring		272	
DS 932-130	Ballpin	VI	-	
DS 932-140	Knob	VI	-	
DB 935-1	Folding seat		276	
DF 935-1	Folding seat		-	
DE 935-62	Spindle	VI	-	
DF 935-63	Pin	VI	-	
DF 935-64	Yoke		-	
DE 935-65	Yoke		-	
DM 941-1	Frame		278	
D 941-2	Padding	VI	-	
D 941-2a	Padding	VI	-	
DB 941-3	Lining		-	
DB 941-3a	Lining		-	
DS 941-78	Lining		277	
DS 941-82	Arm-rest		276	
DS 941-82a	Arm-rest		-	
DM 941-91	Case		278	
DS 942-73	Ferrule	VI	272	
DS 942-78	Head rest		-	
D 961-08	Window winder	VI	248-252	
D 961-08a	Window winder	VI	-	
DS 961-08	Window winder	VI	-	
DS 961-08a	Window winder	VI	-	
D 961-3a	Glass	VI	270	
DS 961-3a	Glass	VI	-	
DS 961-4	Glass	VI	248	
DS 961-4a	Glass	VI	252	
DS 961-4c	Glass	VI	248-252	
DF 961-6	Glass	VI	248	
DF 961-6a	Glass	VI	252	
DF 961-6b	Glass	VI	-	
DE 961-7	Glass	VI	265	
DF 961-7a	Glass	VI	-	
DS 961-8	Bottom channel		248	
DS 961-8a	Bottom channel		-	
DS 961-8b	Bottom channel		252	
DS 961-8c	Bottom channel		-	
DS 961-9	Bottom channel		248	
DS 961-9a	Bottom channel		-	
DS 961-9b	Bottom channel		252	
DS 961-9c	Bottom channel		-	
DM 961-17	Rubber		270	
DS 961-19	Sealing strip	VI	248-252	
DS 961-19a	Sealing strip	VI	-	
DS 961-23	Handle		252	
DM 961-23a	Handle		248	
D 961-26	Escutcheon		252	
DM 961-26a	Escutcheon		248	

NUMBER	DESCRIPTION	Section	PAGE No.	REMARKS
DS 961-30b	Sealing strip		248-252	
DS 961-31c	Sealing strip		-	
DF 961-32	Glass	VI	227	
DF 961-32a	Glass	VI	-	
DF 961-33	Seal		-	
D 961-53	Surround		240	
DS 961-56	Pressure pad	270		
DS 961-57	Glass guide		248-252	
DS 961-57a	Glass guide		-	
DS 961-57b	Glass guide		252	
DS 961-57c	Glass guide		-	
DF 961-61	Seal		265	
D 961-67	Washer	VI	248-252	
DS 961-74	Rubber seal		-	
DS 961-74b	Rubber seal		-	
D 961-75	Surround		219-223	
D 961-75a	Surround		-	
D 961-80	Plug		244-265	
DS 961-81	Glass guide		248-252	
DS 961-81a	Glass guide		-	
DS 961-81b	Glass guide		252	
DS 961-81c	Glass guide		-	
D 961-95	Plug		244	
D 961-98	Seal	VI	270	
D 961-112	Lockwasher	VI	248-252	
D 961-115	Reinforcement		240	
DS 961-118	Wedge		248-252	
D 961-123	Friction cop		252	
DM961-123	Friction cup		248	
D 961-124	Spring		248-252	
DS 961-13S	Stop	VI	-	
DS 961-146	Rubber pad		270	
D 961-147	Reinforcement		240	
DS 961-161b	Surround		270	
DS 961-175	Slide	VI	248	
DS 961-175a	Slide	VI	-	
DS 961-175b	Slide	VI	255	
DS 961-175c	Slide	VI	-	
DS 961-175d	Slide	VI	248-255	
DS 961-175e	Slide	VI	-	
DS 961-180	Protector	VI	-	
DS 961-189	Reinforcement		219-233-270	
DB 981-1a	Carpet		279	
DE 981-1	Carpet		-	
DF 981-1c	Carpet		-	
DM981-1v	Carpet		-	
DS 981-1g	Carpet		-	
DE 981-2b	Carpet		-	
DM981-2	Carpet (rear)		-	

NUMBER	DESCRIPTION	Section	PAGE No.	REMARKS
DM981-2f	Carpet		279	
DS 981-2a	Carpet (rear)		-	
DS 981-2e	Carpet		-	
DF 981-6b	Carpet		-	
DF 981-64	Lining		276	
DF 981-70	Lining		280	
DF 981-70a	Lining		283	
DF 981-78	Lining		280	
DM981-78	Lining		283	
DM981-78c	Lining		-	
DS 981-78b	Lining		280	
DM981-81	Lining		-	
DM981-81b	Lining		283	
DS 981-81	Lining		280	
DF 981-83	Lining		-	
DF 981-83a	Lining		-	
DM981-83	Lining		-	
DM981-83a	Lining		-	
DM981-83h	Lining		-	
DS 981-83m	Lining		-	
DM981-85	Lining		-	
DF 981-88c	Lining		-	
DF 981-88h	Lining		-	
DS 981-115	Clip		279	
DM981-117	Finisher		244-280	
DM981-118	Finisher		-	
DF 981-120	Lining		283	
DS 981-123	Plate		279	
DS 981-123a	Plate		-	
DS 981-127	Lining		280	
DS 981-127a	Lining		283	
DS 981-129	Felt		280	
DS 981-129a	Lining		283	
DF 981-135	Lining		-	
DF 981-137	Lining		-	
DS 982-46	Lining		235	
DS 982-46a	Lining		-	
DS 982-46b	Lining		-	
DS 982-46d	Lining		-	
DB 982-48	Panel		227	
DM982-58	Lining		279-280	
DS 982-58b	Lining		-	
DS 982-68b	Lining	VI	228	
DS 982-68c	Lining	VI	-	
DS 982-69b	Lining	VI	-	
DS 982-69c	Lining	VI	-	
DS 982-81b	Lining		279280	
DM982-109	Lining		228	
DM982-109a	Lining		-	

NUMBER	DESCRIPTION	Section	PAGE No.	REMARKS
DM 983-1b	Panel		278	
DM 983-2b	Panel			
DS 983-10	Moulding	VI	-	
DS 983-10a	Moulding	VI	-	
DS 983-11	Moulding	VI	-	
DS 983-11a	Moulding	VI	-	
DM 983-12b	Panel			
DM 983-13b	Panel			
D 983-59	Panel			
D 983-71	Panel			
D 983-71a	Panel			
DM 983-71	Panel			
DM 983-74	Panel			
D 983-75	Panel			
DS 983-81	Sealing plug	VI	269-278	
DS 984-3	Sealing strip	VI	244-258-261	
DS 984-3a	Sealing strip	VI	-	
DM 985-73	Lining		280	
DF 985-86	Lining		283	
DM 985-86	Lining		280	
DM 985-86c	Lining		283	
DS 985-86	Lining		280	
DF 985-98	Lining			
DM 985-98e	Lining		283	
DF 985-99	Lining		280	
DM 985-99c	Lining		283	
DM 985-99j	Lining			
DS 985-99d	Lining		280	
DB 986-1b	Lining			
DM 986-95	Lining	VI	278	
DM 986-95a	Lining	VI	-	
DS 986-97	Lining		280	
DS 986-99	Lining			
DM 986-100	Lining		278	
DM 986-100a	Lining			
DE 988-1	Seal	VI	240-280	
DF 988-1a	Seal	VI	-	
DF 988-2a	Lining			
DF 988-98	Lining		280	
DE 988-98a	Lining	VI	-	
DB 989-1	Lining		283	
DF 989-1	Lining			
DB 989-50	Lining			
DB 989-50a	Lining			
DF 989-89a	Lining		265-280	
DF 989-92	Lining		280	
DF 989-92a	Lining			
DB 989-97	Lining		269	

SUPPLEMENTARY INDEX

NUMBER	DESIGNATION	Section	PAGE No.	REMARKS
242	Packet.	R.VI	1	
243	Packet.	R.VI	1	
2.338	Screw.	R.III	34-50-265	
2.659	Screw.	R.III	25-26-30-49-50-121-134-180-190-194-228-232-236-244	
3.008	Washer	R.III	122	
3.732	Cable		178	
3.733	Cable		178	
6.258	Washer	R.IV	194	
6.278	Washer	R.IV	251-255	
10.378	Key	R.I	45	
10.530	Bearing.	R.VI	78	
12.685	Screw.	R.I	45	
39.827	Washer	R.IV	118	
88.105	Key	R.II	17-18	
88.294	Nut	R.II	162-165	
88.523	Circlip	R.I	2	
88.613	Washer	R.III	37	
88.616	Washer	R.III	219-227	
88.625	Washer	R.I	9	
88.629	Washer	R.I	70-77	
88.642	Washer	R.I	58-61	
88.795	Plate	R.I	2-18	
88.931	Plug	R.I	2	
88.940	Dowel	R.I	2	
88.963	Screw.	R.I	45	
89.114	Screw.	R.III	236	
89.149	Screw.	R.lII	134-198-205-210-236	
89.156	Screw.	R.lII	113-134	
89.500	Bearing.	R.VI	154-158	
89.591	Screw.	R.III	38-236	
89.764	Washer	R.IV	227	
89.840	Washer	R.II	265	
117.290	Plug.	R.I	5	
150.479	Pin	R.IV	276	
233.400	Link.	R.IV	198-205-210-228-232-265-269	
295.502	Buffer.	R.IV	232-244-265	
302.771	Clip.	R.VI	49-50-198	
355.874	Joint	R.II	113	
355.876	Cap	R.VI	113	
392.629	Weight	R.VI	214	
392.630	Weight	R.VI	214	
392.631	Weight	R.VI	214	
392.632	Spring	R.VI	214	
408.451	Bearing	R.VI	69	
431.442	Clamp	R.II	86	
438.157	Cup	R.II	109	
438.320	Washer	R.II	186	
450.234	Nut	R.I	45	
451.343	Nut	R.I	18	
451.374	Gasket	R.V	5	
451.379	Lubricator	R.I	5	
451.397/02	Cotter.	R.I	9	
451.434	Screw	R.I	45	
451.504	Plug.	R.I	9	
451.672	Union	R.I	45	
451.786	Nut	R.1	45	
452.685	Cover	R.I	45	
452.686	Filter	R.1	45	
452.719	Filter	R.1	45	
452.722	Distance piece	R.I	45	
452.723	Plate	R.I	45	
453.117	Gasket.	R.V	45	
453.173	Housing	R.III	38-42	
456.399	Ring	R.VI	46	
456.944	Dipstick	R.VI	5	
456.998	Ring	R.I	9	
457.159	Element	R.VI	5	
457.160	Cap	R.VI	5	
457.182	Cup	R.I	9	
457.184/02	Cotter.	R.I	9	
457.208	Screw	R.III	38	
457.220	Gasket	R.VI	45	
457.254	Plug.	R.I	9	
457.281	Cap	R.VI	9	
457.287	Cap	R.VI	9	
457.295	Element	R.VI	9	
457.298	Joint	R.VI	9	
457.301	Nut	R.I	9	
457.347	Pinion	R.l	18	
457.371	Spindle		45	
457.372/02	Cotter.	R.I	45	
457.373	Pinion	R.1	45	
457.374	Pinion	R.I	45	
457.375	Shaft	R.I	45	
457.376	Base	R.I	45	
457.380	Bush	R.I	45	
457.381	Piston	R.I	45	
457.383	Housing	R.I	45	
457.386	Pinion	R.I	45	
457.456	Ring	R.I	17	
457.468	Plate	R.I	9	
457.469	Joint	R.VI	9	

NUMBER	DESCRIPTION	Section	PAGE No.	REMARKS
457.973	Casing		45	
460.644	Circlip	R.I	17	
461.113	Screw	R.I	9	
461.125	Washer	R.I	17	
461.143	Plate	R.I	5-18	
461.178	Pinion	R.l	17	
461.256	Chain	R.VI	18	
461.492	Washer	R.I	18	
461.493	Nut	R.I	18	
461.494	Nut	R.VI	17	
461.495	Washer	R.I	17	
461.698	Nut	R.I	9	
461.751	Washer	R.l	17	
470.424	Gasket	R.VI	5	
470.705	Washer	R.I	45	
472.394/02	Ring	R.l	46	
481.716	Di~tance piece	R.VI	13	
490.708	Screw	R.I	58-118	
491.041	Washer	R.VI	53	
491.056	Nut	R.VI	53	
493.081	Toggle	R.VI	53	
493.108	Screw	R.I	58	
493.114	Plate	R.VI	53	
493.115	Screw	R.VI	53	
500.614	P1~mger	R.I	61	
500.837	Bracket	R.I	58	
501.002	Cap	R.I	66	
508.093	Circlip	Rd	17-53	
508.425	Spindle	R.I	69	
508.426	Spindle	R.I	69	
508.440	Screw	R.I	78	
543.322	Bush	R.VI	126-129	
543.335	Cotter	R.lI	125-126	
550.886	Joint	R.VI	113	
585.698	Clip	R.IlI	50-198-205-210	
586.87?	Diaphragm	R.VI	30	
595.022	Gasket	R.VI	30	
595.386	Washer	R.VI	30	
611.014	Washer	R.I	46	
611.018	Washer	R.III	21	
612.620	Seal	R.VI	82	
612.621	Seal	R.VI	86	
612.623	Sealing ring	R.VI	86	
613.007	Washer	R.I	58	
613.014	Plug	R.VI	194.236-265	
613.158	Cap	R.VI	279	
613.159	Catch	R.VI	279	
613.164	Stud	R.VI	269	
614.000	Clip	R.VI	98-118	

NUMBER	DESCRIPTION	Section	PAGE No.	REMARKS
614.001	Clip	R.VI	118-121	
614.002	Clip	R.VI	78	
614.003	Clip	R.VI	93-97	
614.004	Clip	R.VI	78	
614.006	Clip	R.VI	13	
614.007	Clip	R.VI	30-121-134	
614.010	Clip	R.VI	121	
614.011	Clip	R.VI	118-121	
614.015	Clip	R.VI	30	
614.020	Clip	R.VI	198-205-210-213	
614.050	Clip	R.VI	198-210	
614.201	Nut	R.II	61-122-125	
614.541	Eyelet	R.VI	179	
614.542	Eyelet	R.VI	179	
614.543	Eyelet	R.VI	179	
614.544	Eyelet	R.VI	179	
615.016	Nut	R.I	53	
615.021	Nut	R.VI	70-77	
615.024	Nut	R.IV	244	
615.025	Nut	R.III	21-157	
615.710	Clip	R.VI	106-170-198-205-210	
615.711	Nut	R.VI	166-173	
615.712	Nut	R.VI	170-194-258-261	
615.713	Nut	R.VI	180-189-190	
615.714	Nut	R.VI	118-258-261	
615.715	Nut	R.VI	219-227-236-251-255-258-261	
615.721	Nut	R.VI	219	
615.725	Nut	R.VI	50-106	
615.732	Nut	R.VI	37-219	
615.745	Nutclip		106	
615.753	Nut	R.VI	37	
615.800	Nut	R.VI	240	
615.801	Screw	R.VI	240	
615.850	Nut	R.VI	73	
615.851	Nut	R.VI	73	
616.011	Stud	R.I	46	
616.014	Stud		46	
616.023	Stud	R.I	58	
616.036	Stud	R.I	9	
616.037	Stud	R.I	9	
616.038	Stud	R.I	9	
616.039	Stud	R.I	9	
616.040	Stud	R.I	9	
616.051	Stud	R.I	9	
617.005	Pin	R.VI	5-17	
617.017	Pin	R.VI	251-255	
618.745	Rivet	R.VI	198-210-231	

NUMBER	DESIGNATION	Section	PAGE No.	REMARKS
619.013	Washer.	R.VI	182	
619.02Z	Washer.	R.III	189-190-219-258-261	
619.024	Washer.	R.II	21-190	
619.037	Washer.	R.III	180	
619.047	Joint	R.VI	13-46	
619.051	Washer.	R.VI	109	
619.056	Washer.	R.VI	180	
619.066	Washer.	R.IV	240-251-255	
619.067	Washer.	R.IV	228-231-251-255-269	
619.068	Washer.	R.IV	251-255	
619.069	Washer.	R.lI	240-251-255-265-275	
619.083	Washer.	R.IV	236	
619.089	Washer.	R.III	205-210	
619.092	Washer.	R.I	22-26	
619.096	Washer.	R.II	106	
619.105	Washer.	R.III	33	
619.106	Washer.	R.III	21-145-153	
619.122	Washer.	R.III	50-269	
619.133	Washer.	R.VI	37-193-265-269	
619.141	Washer.	R.IV	223	
619.634	Grommet	R.VI	271	
619.755	Clip	R.VI	228-231-236	
619.763	Clip	R.VI	251-255	
619.764	Clip	R.VI	228-275	
619.766	Clip	R.VI	278	
619.775	Clip	R.VI	244	
619.778	Clip	R.VI	278	
619.779	Clip	R.IV	244	
619.784	Clip	R.VI	251-255	
619.793	Clip	R.VI	228	
619.799	Clip	R.VI	49-50	
619.817	Clip	R.VI	231	
620.047	Bearing.	R.VI	66	
620.049	Bearing.	R.VI	82	
620.051	Cage	R.VI	82-86	
620.052	Ring	R.VI	82	
620.053	Bearing.	R.VI	86	
620.061	Race	R.II	101-102	
620.066	Bearing.	R.VI	106	
620.067	Bearing.	R.VI	93-97	
620.068	Race.	R.II	93-97	
620.070	Bearing.	R.II	86	
620.072	Bearing.	R.I	66	
620.073	Bearing.	R.VI	114	
620.077	Bearing.	R.VI	90	
620.079	Bearing.	R.II	86	

NUMBER	DESIGNATION	Section	PAGE No.	REMARKS
620.081	Cage.	R.VI	66	
620.083	Cage.	R.VI	66	
620.087	Cage.	R.VI	66	
620.088	Bearing	R.I	66	
620.094	Cage.	R.VI	66	
620.110	Bearing	R.VI	18	
620.111	Bearing	R.VI	17-46	
620.115	Bearing	R.VI	82	
620.125	Cage.	R.VI	66	
620.126	Bearing	R.VI	66	
620.501	Ring.	R.VI	17	
620.503	Circlip	R.VI	66-106	
620.523	Circlip	R.I	66	
620.524	Circlip	R.VI	66	
620.525	Circlip	R.VI	118	
621.011	Screw	R.III	194	
621.027	Screw	R.III	21-33-49-50	
621.029	Screw	R.I	46	
621.035	Screw	R.IV	205-210	
621.037	Screw	R.II	82	
621.042	Screw	R.II	13	
621.043	Screw	R.I	5	
621.045	Screw	R.II	118	
621.048	Screw	R.II	106-272	
621.050	Screw	R.IV	30-236	
621.051	Screw	R.II	78	
621.054	Screw	R.II	106	
621.055	Screw	R.I	130	
621.057	Screw	R.II	122	
621.058	Screw	R.IV	251-255	
621.062	Screw	R.III	13-30-38-42-50-106-121-137-170-174-177-189.190.198 205-210-219-232-269	
621.071	Screw		5	
621.072	Screw	R.III	193-265-269	
621.077	Screw	R.III	186	
621.089	Screw	R.VI	271	
621.400	Screw	R.III	37	
621.500	Screw	R.VI	251-255	
621.505	Screw	R.VI	247	
622.801	Screw	R.III	162-165	
622.950	Screw	R.VI	73	
624.001	Washer.	R.VI	265	
624.028	Washer.	R.III	186	
624.029	Washer.	R.VI	265	
648.522	Pliers	R.VI	214	

NUMBER	DESCRIPTION	Section	PAGE No.	REMARKS
650.137	Screwdriver	R.VI	214	
650.139	Spanner	R.VI	214	
650.147	Spanner	R.VI	214	
650.148	Spanner	R.VI	214	
650.Z32	Spanner	R.VI	214	
700.175	Greaser	R.VI	46	
701.226	Screw	R.VI	162-165	
701.325	Screw	R.III	162-165	
701.798	Sleeve	R.VI	162-165	
701.799	Pinion	R.VI	162-165	
701.800	Spring	R.VI	16Z-165	
701.801	Ring	R.VI	162-165	
701.802	Circlip	R.VI	162-165	
701.804	Sleeve	R.VI	162-165	
701.805	Spring	R.VI	162-165	
701.806	Circlip	R.VI	162-165	
701.829	Screw	R.VI	162-165	
701.830	Drive	R.VI	162-165	
701.831	Screw	R.VI	162-165	
701.848	Circlip	R.VI	162	
701.854	Bush	R.VI	165	
701.861	Brushholder	R.VI	165	
702.281	Brush	R.VI	154	
702.283	Spring	R.VI	154	
702.285	Holder	R.VI	154	
702.288	Plate	R.VI	154	
702.301	Brushholder	R.VI	158	
702.328	Brush	R.VI	158	
706.067	Bulb	R.VI	169-173	
706.543	Bulb	R.VI	142-150	
706.604	Bulb	R.VI	169-170-173-174-177	
706.609	Bulb	R.VI	170-177	
706.639	Bulb	R.VI	150-170	
706.704	Bulb	R.VI	142-150	
706.715	Bulb	R.VI	145-150	
706.717	Bulb	R.VI	169-173	
706.722	Bulb	R.VI	145-150	
706.726	Bulb	R.VI	166-173	
706.727	Bulb	R.VI	166-173	
706.729	Bulb	R.VI	166-173	
706.730	Bulb	R.VI	174	
706.734	Bulb	R.VI	166-173	
707.194	Bulb	R.VI	170-177	
709.707	Condenser	R.VI	38-42	
710.005	Ring	R.III	38-42	
710.022	Nut	R.VI	179	
711.472	Eyelet	R.III	179	
722.429	Washer	R.III	179	
722.458	Junction box	R.III	179	
722.593	Clip	R.VI	179	
730.007	Dowel	R.I	5	
804.104	Cap	R.IV	205-210	
921.552	Cable		178	

NUMBER	DESIGNATION	Section	PAGE No.	REMARKS
4-S	Screw	R.III	174	
62-S	Screw	R.III	57-182-197-201-206	
63-S	Screw	R.III	13-170-177	
64-S	Screw	R.III	137-235	
64-S-30	Screw	R.III	30	
76-S-30	Screw	R.III	30	
83-S	Screw	R.III	113	
89-S	Screw	R.III	181	
106-S-30	Screw	R.III	265	
123-S	Screw	R.III	22-49-194-198-205-210-236	
124-S-30	Screw	R.III	90-138-166-173-228-244-269	
125-S	Screw	R.III	106-198	
125-S-30	Screw	R.III	118-232	
126-S-30	Screw	R.III	154-157-158-161-232	
127-S	Screw	R.III	138-141-205	
129-S	Screw	RIII	89-90-118	
131-S	Screw	R.III	38-162-165	
135-S	Screw	R.III	30-113-276	
155-S-30	Screw	R.III	130-269	
156-S	Screw	R.III	190	
183-S	Screw	R.III	86	
185-S	Screw	R.III	174	
190-S	Screw	R.III	30	
295-S	Screw	R.III	223	
295-S-30	Screw	R.III	26-37-106-141-213	
297-S	Screw	R.III	42	
304-S	Screw	R.III	219	
306-S-30	Screw	R.III	37-186	
308-S-30	Screw	R.VI	182	
321-S	Screw	R.III	130	
362-S	Circlip	R.III	106	
480-S	Screw	R.III	130-265	
481-S	Screw	R.III	247	
482-S	Screw	R.III	2-9-13-109-113-118-121-223-236	
483-S	Screw	R.III	2-9-13-14-18-21 22-38-45-53-70-77-118-126-129-189-198-205-210 214.228	
483-S-30	Screw	R.III	13-33-49-50-129-275	
484-S	Screw	R.III	33-34-S3-70-77-106-113-114-179	

NUMBER	DESIGNATION	Section	PAGE No.	REMARKS
485-S	Screw	R.III	45-125-129	
485-S-30	Screw	R.III	37-145-153-194-232-270	
486-S	Screw	R.III	2-14-37	
486-S-30	Screw	R.III	2-33-34-57-189-190-265	
4~7-S	Screw	R.III	33-46-57-101-102-106-118	
487-S-30	Screw	R.III	37-244-265	
488-S	Screw	R.III	37-101-102	
489-S	Screw	R.III	2-14-57-101-102-113-118	
489-S-30	Screw	R.III	265	
491-S	Screw	R.III	121	
493-S	Screw	R.III	57	
494-S	Screw	R.III	57	
495-S	Screw	R.III	13-126	
495-S-30	Screw	R.III	275	
497-S	Screw	R.III	33-129	
518-S-30	Screw	R.III	21	
521-S	Screw	R.III	21-228	
522-S	Screw	R.III	82	
530-S-30	Screw	R.III	21-33-232	
532-S	Screw	R.III	82-189	
535-S	Screw	R.III	86	
538-S	Screw	R.III	154-157-158-161-228-232	
538-S-30	Screw	R.III	190-194	
588-S	Screw	R.III	272	
589-S	Screw	R.III	45-57	
590-S	Screw	R.III	57	
596-S	Screw	R.III	49-50	
600-S	Screw	R.III	78	
601-S-30	Screw		145-153	
635-S	Stud	R.III	46	
637-S	Stud	R.III	13	
665-S	Screw	R.III	21	
667-S	Screw	R.III	57	
671-S	Screw	R.III	57	
677-S	Screw	R.III	57	
764-S	Screw	R.III	45	
820-S	Stud	R.III	13	
842-S	Screw	R.III	113	
844-S	Screw	R.III	21	
945-S	Screw	R.III	57	
1.020-S	Screw	R.III	189-190	
1.062-S	Grommet	R.III	30	
1.065-S	Grommet	R.III	30	
1.381-S	Union.	R.III	13	

NUMBER	DESIGNATION	Section	PAGE No.	REMARKS
1.561-S	Union	R.III	13	
1.797-S	Washer	R.VI	30	
1.798-S	Washer	R.VI	205	
1.972-S	Rivet	R.VI	50	
2.217-S	Washer	R.III	49-50-78-244	
2.243-S	Screw	R.VI	170	
2.244-S	Screw	R.VI	170-174-177	
2.262-S	Washer	R.III	181-265	
2.263-S	Screw	R.VI	181-227	
2.269-S	Nut	R.III	22-26-137-170-177-181-265	
2.270-S	Screw	R.VI	205-210	
2.271-S	Nut	R.III	122-232	
2.281-S	Screw	R.VI	181	
2.284-S	Washer	R.VI	181-232	
2.300-S	Nut	R.III	271	
2.301-S	Nut	R.III	106	
2.312-S	Washer	R.III	2-30-49-50-90-142-150- 190-228-248-255-258-261-265	
2.317-S	Nut	R.III	82	
2.319-S	Nut	R.III	13-25-26-30-34-38-50-98-113-118-125-213-134-138-142-150-162-165-182-194-205	
2.320-S	Nut	R.III	90-141-181-223-269	
2.323-S	Nut	R.III	2-25-106-121-137-189-190-193-258-261	
2.324-S	Nut	R.III	42-278	
2.334-S	Washer.	R.VI	30-182-219-223-228.236.258..261.265.269.213	
2.335-S	Washer	R.VI	247	
2.363-S	Washer	R.III	37-219	
2.368-S	Nut.	R.III	101-102-122	
2.369-S	Nut.	R.III	141-137	
2.370-S	Nut.	R.III	46	
2.371-S	Nut.	R.III	154-157-161-162	
2.372-S	Nut.	R.III	70-77-109-114	
2.388-S	Washer	R.VI	247	
2.389-S	Washer	R.VI	154-157-158-161-232	
2.406-S	Screw	R.III	236	
2.431-S	Rivet	R.VI	50	

NUMBER	DESIGNATION	Section	PAGE No.	REMARKS
2.433-S	Nut	R.III	186	
2.459-S	Joint	R.VI	61	
2.462-S	Joint	R.VI	30	
2.466-S	Washer.	R.VI	205-210	
2.470-S	Washer.	R.VI	2	
2.475-S	Washer.	R.VI	58	
2.478-S	Joint	R.VI	2-58	
2.482-S	Washer	R.III	21-37-49-50-145-153-189-190-193-223-232-236-240-248-255-265	
2.491-S	Nut	R.III	1321222633 34-37-58-70-77-86-89-90-97-101-102-106-113-114-118-121-122-125-126-129-145-153-154-157-158-161-162-165-179-189-194-236-240-27	
2.492-S	Screw	R.VI	272	
2.493-S	Nut	R.III	2-9-13-14-46-66-70-77-101-118-121-125-126-129-236-248-255	
2.494-S	Nut	R.III	180	
2.496-S	Nut	R.III	25	
2.497-S	Nut	R.III	154-158	
2.499-S	Screw	R.VI	198-205-210-240-258-261-278-213	
2.502-S-30	Screw	R.VI	205-265	
2.503-S	Nut	R.III	14-45-190-193	
2.504-S	Nut	R.III	34	
2.506-S	Screw	R.VI	181	
2.508-S	Screw	R.VI	258-261-269-272-213	
2.509-S-30	Screw	R.VI	278	
2.510-S-30	Screw	R.VI	269-276	
2.514-S	Washer.	R.VI	38-154-157-158-161-223-232-236-240-248-255-256	
2.516-S-30	Screw	R.VI	190-247	
2.524-S	Clip	R.III	30	

NUMBER	DESIGNATION	Section	PAGE No.	REMARKS
2.547-S-30	Screw	R.VI	265	
2.548-S-30	Screw	R.VI	210-265-269-27	
2.551-S	Nut	R.III	165	
2.553-S	Nut	R.III	45	
2.557-S	Clip	R.VI	49-50	
2.559-S	Clip	R.VI	13-49-50	
2.602-S	Washer.	R.III	37	
2.610-S	Screw	R.VI	248-255-272-275	
2.611-S	Nut	R.III	14	
2.652-S	Screw	R.VI	170	
2.662-S	Washer.	R.III	271	
2.664-S	Screw	R.III	219-227	
2.665-S	Screw	R.VI	170-194-198-20S-210-219-213	
2.668-S	Screw	R.VI	118-197-198-201-205-206-210-213	
2.669-S	Nut	R.III	189-190	
2.694-S	Washer.	R.VI	154-158-162-165-271	
2.707-S	Ball	R.VI	61-89-90-93-97-113	
2.713-S	Ball	R.VI	66	
2.714-S	Ball	R.VI	61-113	
2.741-S	Screw	R.VI	106-122-145-153-228-231	
2.746-S	Screw	R.VI	14-106-170-180-189-190-193-194-244	
2.756-S	Screw	R.VI	169-173-181-198-205-210-236-272-213	
2.813-S	Washer	R.VI	21-157-161	
2.854-S	Clip	R.VI	13-205-210	
2.876-S	Clip	R.VI	205-210	
2.884-S	Clip	R.VI	14	
2.985-S	Clip	R.VI	198-205-210	
2.989-S	Clip	R.VI	l3-205-2~0	
3.016-S	Clip	R.VI	210	
3.232-S	Washer	R.III	181	
3.234-S	Washer	R.VI	181-248-255-.278-213	
3.298-S	Bush	R.VI	46	
4.102-S	Ball	R.VI	101-102	
4.104-S	Bearing	R.VI	113	
4.106-S	Ball	R.VI	118	
4.108-S	Ball	R.VI	121	
4.113-S	Bearing	R.VI	113	
4.151-S	Key	R.III	114	

NUMBER	DESIGNATION	Section	PAGE No.	REMARKS
4.153-S	Key	R.VI	46	
4.154-S	Key	R.III	154-157-158-162-165	
4.737-S	Nipple	R.VI	78-82-118	
4.903-S	Ring	R.VI	113	
4.905-S	Ring	R.VI	114	
4.906-S	Ring	R.VI	109	
4.907-S	Seal	R.VI	18	
4.917-S	Ring seal	R.VI	137	
4.922-S	Ring	R.VI	98-130-137	
4.924-S	Ring seal	R.VI	58	
4.925-S	Seal	R.VI	58	
4.929-S	Ring	R.VI	114	
4.930-S	Ring	R.VI	114-275	
4.932-S	Ring	R.VI	61	
4.960-S	Ring seal	R.III	113	
5.400-S	Nut	R.III	101-102	
5.404-S	Nut	R.VI	86	

NUMBER	DESCRIPTION	Section	PAGE No.	REMARKS	NUMBER	DESCRIPTION	Section	PAGE No.	REMARKS
A 121-80	Seal.	R.VI	2						
A 132-1	Plug		2						
A 141-4	Nut		33-37						
A 174-84	Joint	R.VI	10-29						
A 175-14	Plug	R.VI	29						
A 225-86	Union screw		45						
A 225-87	Joint	R.VI	45						
A 331-5	Plug		54						
A 344-99c	Washer.		105						
A 381-96	Locking piece		54						
A 451-3	Pin		109						
A 451-16	Cam		109						
A 451-80	Tube	R.VI	78						
A451-85	Spring	R.VI	109						
A451-86	Distance piece		109						
A 453-26	Screw.		109						
A 453-28	Cap	R.VI	109						
A 453-72	Joint		45						
A 454-76	Stop		129						
A 512-3b	Socket	R.VI	179						
A 512-4a	Plug	R.VI	179						
A 512-5b	Sleeve	R.VI	179						
A 525-95a	Collar	R.VI	49-50-275						
A 525-96a	Screw	R.VI	49-50						
A 533-17b	Spring	R.VI	165						
A 565-97	Circlip	R.VI	182						
A 565-98	Washer.	R.VI	182						
A 615-84	Buffer		49-266						
A 961-53	Catch		194-235-266						
A 982-99	Strip		266						

NUMBER	DESCRIPTION	Section	PAGE No.	REMARKS	NUMBER	DESCRIPTION	Section	PAGE No.	REMARKS
AM 532-03	End plate.	R.VI	157						
AM 532-11	Brushholder	R.VI	157						
AM 532-15	Spring	R.VI	157						
AM 532-15a	Spring	R.VI	161						
AM 532-19b	Brush	R.VI	161						
AM 532-19c	Brush	R.VI	157						
AM 532-41a	Nut	R.VI	161						
AM 532-84	Key	R.VI	161						
AM 532-94	Rod	R.VI	157						
AM 564-03	Reservoir.	R.VI	153						
AZ 212-77	Protector	R.VI	41						
H 844-63	Hinge	269							
H 844-93a	Stop.	269							
H 844-101	Hinge	269							
HG 175-15	Collar.	29							

NUMBER	CAMSHAFT	DAMPER	TYPE	REMARKS
DA 1-03	DM 123-0	without	AMBULANCE	Union for temperature gauge bulb. Until July 1961. No longer supplied.
DF 1-03	DM 123-0	without	BREAK (SAFARI) - COMMERCIAL FAMILY TYPE	With heater inlet pipe. Until July 1961. No longer supplied.
DA 1-03a	DM 123-0a	without	AMBULANCE	Union for temperature gauge bulb. July 1961 to March 1963. No longer supplied.
DF 1-03a	DM 123-0a	without	BREAK (SAFARI) - COMMERCIAL FAMILY TYPE	With heater inlet pipe. July 1961 to March 1963. No longer supplied.
DW 1-03a	DM 123-0a	with	ALL TYPES	Since March 1963.

Note: The engines are supplied:

With: Clutch.

Without: Inlet housing, exhaust manifold, water pump, side suspension brackets, oil dipstick, breather, sparking plugs, distributor, starter motor, dynamo, petrol pump.

JOINTS FOR ENGINE

NUMBER	DESCRIPTION	REMARKS
243	Packet of engine gaskets, comprising: all the joints normally used for re-assembling an engine (except copper-asbestos, Hugo-Reinz and rubber) (R. VI).	Until March 1963.
242	Packet of engine gaskets, comprising: all the joints normally used for re-assembling an engine (except copper-asbestos, Hugo-Reinz and rubber) (R. VI).	Since March 1963.

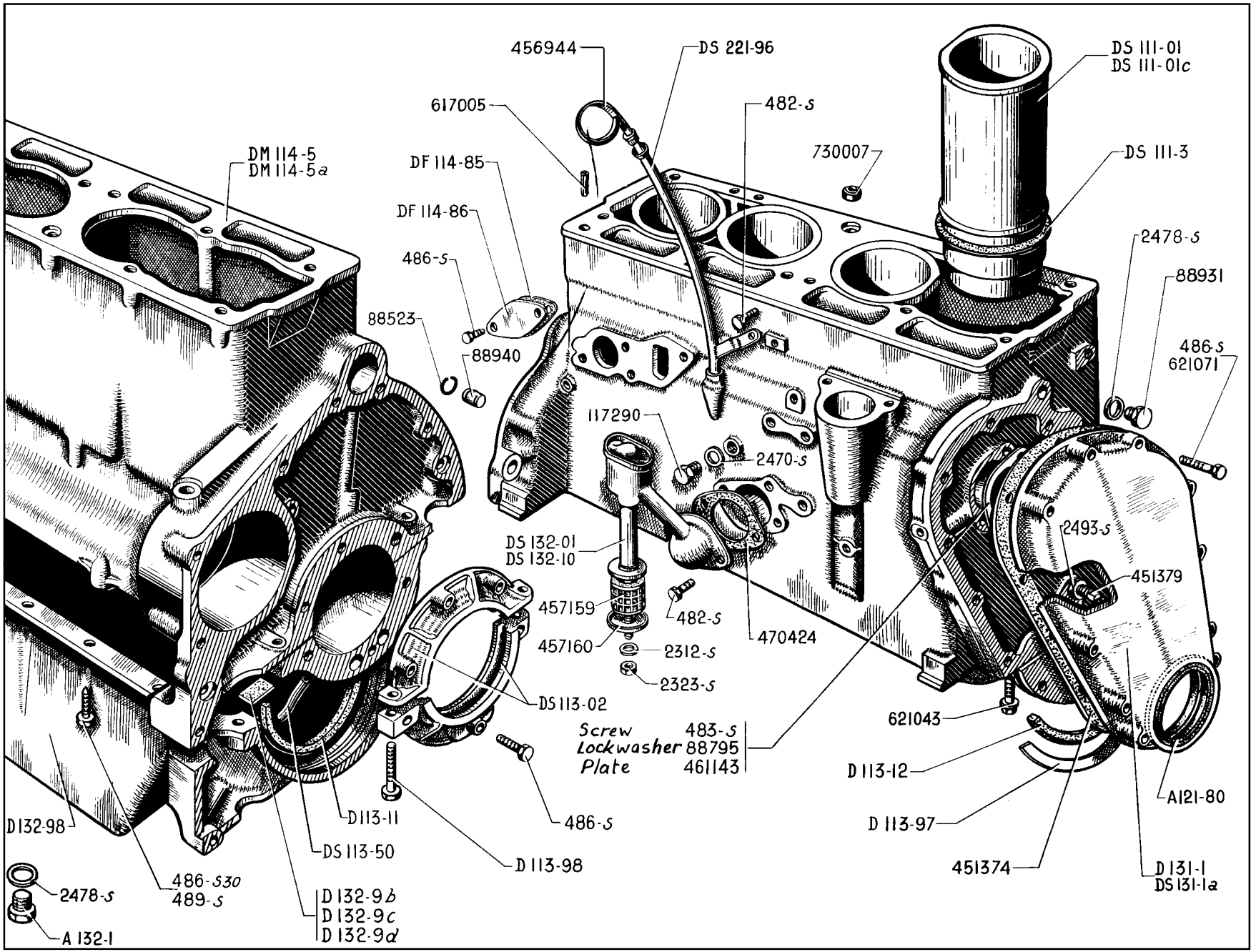
456944
DS 221-96
DS 111-01
DS 111-01c
617005
482-s
730007
DS 111-3
DM 114-5
DM 114-5a
DF 114-85
DF 114-86
486-s
88523
88940
2478-s
88931
486-s
621071
117290
2470-s
DS 132-01
DS 132-10
2493-s
451379
457159
482-s
457160
2312-s
2323-s
470424
DS 113-02
Screw 483-s
Lockwasher 88795
Plate 461143
621043
D 113-12
A121-80
D 113-97
D 132-98
D 113-11
486-s
DS 113-50
D 113-98
451374
D 131-1
DS 131-1a
2478-s
486-s30
489-s
D 132-9b
D 132-9c
D 132-9d
A 132-1

2-CYLINDER BLOCK-SUMP-CYLINDER BARRELS

NUMBER	DESCRIPTION	No. OFF
A 121-80	Sealing ring for damper on timing cover (48 x 65.2 x 10) (R. VI). Since March 1963.	1
A 132-1	Drain plug, hex., 16 diameter x 150 pitch, for sump.	1
DS 111-01	Set of 4 cylinder barrels with pistons, rings, gudgeon pins and joints, (height from seating to top 125.1 mm). Until March 1963.	1
DS 111-01c	Set of 4 cylinder barrels with pistons, rings, gudgeon pins and joints, (domed pistons) damper assembly. Since March 1963.	1
DS 111-3	Paper joint between cylinder and barrel (light blue colour) (R. VI).	4
DS 113-02	Oil baffle, upper and lower assemblies, internal diameters 56 and 77 mm. Until October 1965.	1
DS 113-02a	Set of oil baffles, upper and lower, internal diameter 66 mm and 77 mm. Since October 1965.	1
D 113-11	Joint for bearing cap, flywheel side (section 6.5 x 8) (R. VI).	1
D 113-12	Joint for bearing cap, timing case side (section 6.5 x 8) (R. VI).	1
DS 113-50	Tube for bearing cap, flywheel side. Until June 1964.	1
DM 113-96	Tube for bearing cap, flywheel side, 53 mm long, threaded 12 x 150. Since June 1964.	1
D 113-97	Oil retaining plate for bearing cap channel, 0.5 mm thick, width 6.5 mm.	1
D 113-98	Screw, hex. head, 5 x 25, for crankcase oil baffle.	2
DM 114-5	*Cylinder block (without barrels). Until January 1961. Replaced by DM 114-5a. See Technical Note No. 739.*	1

NUMBER	DESCRIPTION	No. OFF
DM 114-5a	Cylinder block, distance between bearing faces of rear bearing rings 37.7 mm, (fitted with 1-DS 113-91c). Since January 1961.	1
DF 114-85	Gasket for closing plate, suspension pump opening on cylinder (R. VI).	1
DF 114-86	Closing plate for suspension pump opening on cylinder.	1
D 131-1	Timing case cover. Until March 1963.	1
DS 131-1a	Timing case cover, bore for damper 65 mm. Since March 1963.	1
DS 132-01	Breather with filter element. Export and R.H. steering.	1
	Cork gasket for sump (R. VI).	
D 132-9b	- left, timing end (22 x 26.5 x 3).	1
D 132-9c	- right, timing end (14.5 x 22 x 3).	1
D 132-9d	- right and left, flywheel end (15.5 x 22 x 3).	2
DS 132-10	Breather without filter element (R. VI).	1
D 132-84	Closing plate (breather aperature). U.S.A. Since May 1964.	1
D 132-98	*Sump, aluminium. Until June 1964. Replaced by DM 132-98; order in addition: 1-DM 113-96.*	1
DM 132-98	Sump, aluminium, (1 inside web). Since May 1964.	1
DS 221-96	Support tube for oil dipstick (R. VI).	1
482-S	Screw, hex. head, 7 diameter x 12.5 long (R. III) securing:	
	- dipstick support tube.	1
	- breather.	2

NUMBER	DESCRIPTION	No. OFF
483-S	Screw, hex. head, 7 diameter x 15 long, securing camshaft thrust plate (R. III).	2
486-S	Screw, hex. head, 7 diameter x 22.5 long (R. III) securing:	
	- crankcase oil baffle.	6
	- timing case cover.	1
	- closing plate.	2
486-S 30	Screw, hex. head, pointed, 7 diameter x 22.5 long, securing engine sump (R. III).	10
489-S	Screw, hex. head, pointed, 7 diameter x 30 long, securing engine sump (R. III).	4
2.312-S	Washer, 5.5 x 12 under nut securing filter element (R. III). Export and R.H. steering.	1
2.323-S	Nut, hex., 5 diameter x 75 pitch, securing filter element (R. III). Export and R.H. steering.	1
2.470-S	Copper-asbestos washer, 12.2 x 17 x 2, for water drain plug (R. VI).	1
2.478-S	Joint, copper, 16.3 x 22 x 2 (R. VI) for:	
	- sump drain plug.	1
	- oil circulation plug.	2
2.493-S	Nut, hex., 7 diameter x 100 pitch, locking timing chain lubricator (R. III).	1
88.523	Circlip for dowel locating bell-housing (R. I).	2
88.795	Lockplate, single, 8.5 mm diameter hole for screws securing camshaft thrust plate (R. I).	2
88.931	Oil circulation plug, 16 diameter x 150 pitch (R. I).	2
88.940	Dowel for locating bellhousing (14 x 21.5) (R. I).	2

The numbers underlined indicate new parts which do not appear on the illustration.

NUMBER	DESCRIPTION	No. OFF
117.290	Cylinder water drain pipe, 12 diameter x 175 pitch (R. I).	1
451.374	Gasket for timing case (R. VI).	1
451.379	Timing chain lubricator (R. I).	1
456.944	Flexible oil dipstick (R. VI).	1

NUMBER	DESCRIPTION	No. OFF
457.159	Filter element for breather (20 x 44 x 40) (R. VI). Export and Right-hand Steering.	1
457.160	Cap retaining filter element (R. VI). Export and Right-hand Steering.	1
461.143	Plate for camshaft thrust (R. I).	1
470.424	Gasket for breather (R. VI).	1

NUMBER	DESCRIPTION	No. OFF
617.005	Pin, mecanindus, 5 diameter x 10 long, for centring cylinder head (R. VI).	1
621.043	Screw, hex. head, with collar, 12 diameter x 65 long, securing bearing cap (R. I).	6
621.071	Screw, hex. head, 7 diameter x 55 long, securing timing case.	11
730.007	Dowel for locating cylinder head (11.5 x 16 x 7.5) (R. I).	1

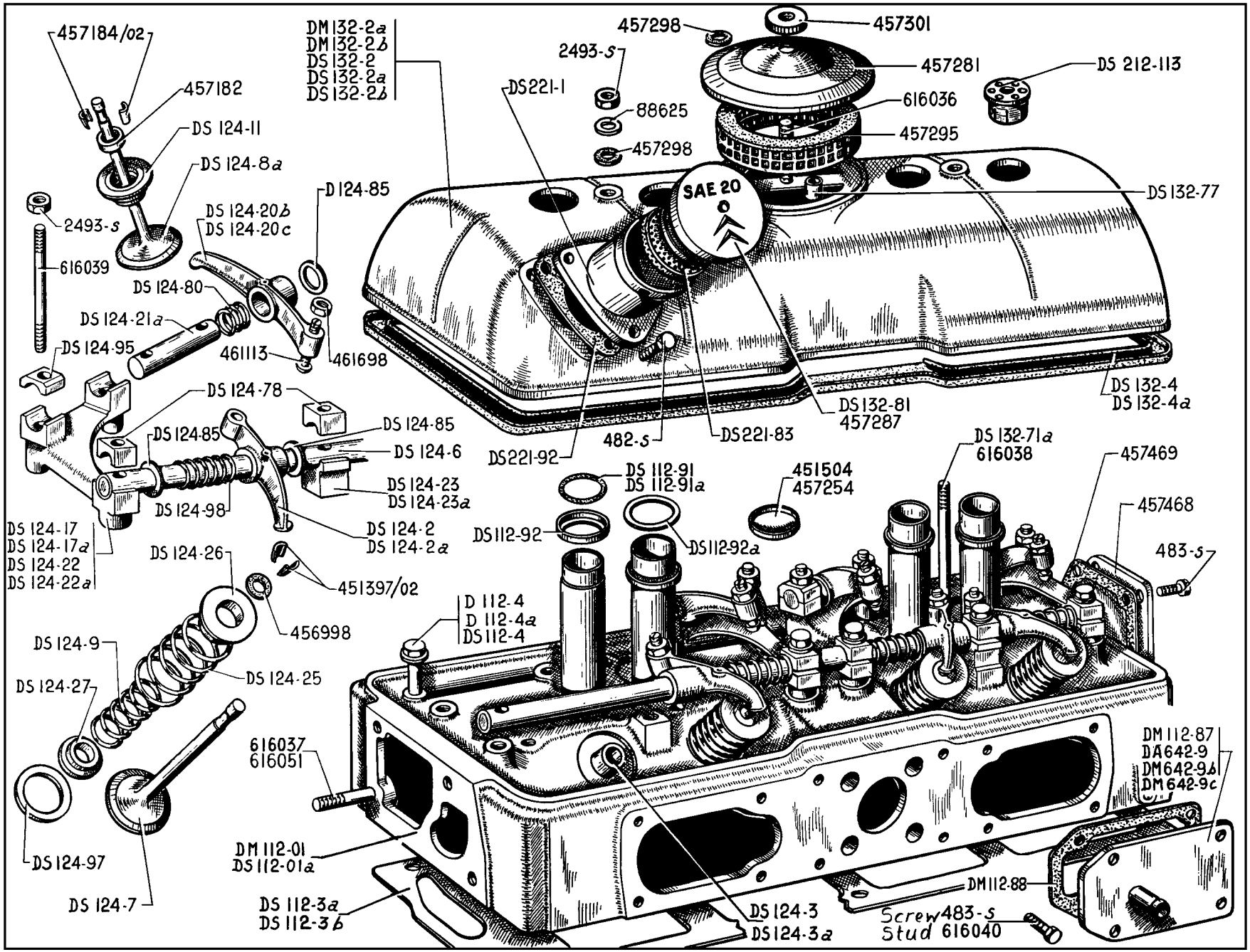
457184/02
457182
DS 124-11
DS 124-8a
2493-s
616039
DS 124-20b
DS 124-20c
DS 124-80
DS 124-21a
DS 124-95
461113
D 124-85
461698
DM 132-2a
DM 132-2b
DS 132-2
DS 132-2a
DS 132-2b
DS221-1
457298
2493-s
88625
457298
457301
457281
616036
457295
DS 212-113
SAE 20
DS 132-77
DS 132-4
DS 132-4a
DS 132-81
457287
DS221-83
482-s
DS221-92
DS 124-78
DS 124-85
DS 124-85
DS 124-6
DS 124-23
DS 124-23a
DS 124-98
DS 124-2
DS 124-2a
DS 124-17
DS 124-17a
DS 124-22
DS 124-22a
DS 124-26
451397/02
456998
DS 124-9
DS 124-27
DS 124-25
DS 124-97
DS 124-7
616037
616051
DM 112-01
DS 112-01a
DS 112-3a
DS 112-3b
DS 112-91
DS 112-91a
DS112-92
DS112-92a
451504
457254
DS 132-71a
616038
457469
457468
483-s
D 112-4
D 112-4a
DS112-4
DM 112-87
DA642-9
DM642-9b
DM642-9c
DM112-88
DS 124-3
DS124-3a
Screw 483-s
Stud 616040

6-CYLINDER HEAD-VALVE ROCKER ASSEMBLY-CYLINDER HEAD COVER

NUMBER	DESCRIPTION	No.OFF
DM 112-01	Cylinder head, only, with valve seats, guides and sparking plug tubes. Until March 1963.	1
DS 112-01a	Cylinder head, only, with valve seats, guides and sparking plug tubes (integral inlet manifold). Since March 1963.	1
DS 112-3a	Cylinder head gasket (R. VI). Until March 1963.	1
DS 112-3b	Cylinder head gasket (Hugo-Reinz (damper assembly) (R. VI). Since March 1963.	1
D 112-4	Screw, hex, head, with collar, 1C x 102 x 25, securing cylinder head. Until September 1961.	7
D 112-4a	Screw, hex, head, with collar, 10 x 105 x 28, securing cylinder head. Since September 1961.	7
DS 112-4	Screw, hex, bead, with collar. 10 x 149 x 25, securing cylinder head.	6
DM 112-87	Side closing plate for cylinder head. All Types except Cold Climates.	1
	Cold Climates.	2
DM 112-88	Joint for closing plate (R. VI).	2
DS 112-91	Sealing ring for sparking plug tube (30. 5 x 42. 5 x 6). Until February 1961.	4
DS 112-91a	Sealing ring for sparking plug tube (rectangular section), 31 x 39 x 6. Since February 1961.	4
DS 112-92	Retainer for sparking plug tube sealing ring (32 x 49 x 4) (R. VI). Since May 1960.	4
	Until February 1961.	8
DS 112-92a	Thrust washer for sparking plug tube sealing ring (32 x 41 x l. 5) (R.VI). Since February 1961.	4

NUMBER	DESCRIPTION	No.OFF
DS 112-93	Rubber plug for sealing 40 mm diameter hole in apron for passage of cylinder head bolts. Since September 1964.	1
DM 112-94	Sealing plug for thermometer bulb, threaded 18 x 150 (R. VI). Since March 1964.	1
DS 112-97	Sparking plug tube, 113 mm long: 32 mm diameter (1st possibility),	4
DS 112-97a	32.3 mm diameter. (2nd possibility).	
DS 124-2	Inlet rockers 2 and 4.	2
DS 124-2a	Inlet rockers 1 and 3.	2
DS 124-3	Valve guide, external diameter 13 mm (1st possibility).	8
DS 124-3a	Valve guide, external diameter 13. 25 mm (2nd possibility).	8
DS 124-6	Inlet rockershaft, 18 mm diameter, 420 mm long.	1
DS 124-7	Inlet valve, 42 mm diameter, 107.7 mm long.	4
DS 124-8a	Exhaust valve, 37 mm diameter, 105. 5 mm long.	4
DS 124-9	Valve spring, inner (13.8 x 22. 2 x 32. 25).	8
DS 124-11	Upper cup for exhaust valve spring, height 8.5 mm, recess 15.3 mm diameter, 4.3mm deep.	4
DS 124-17	Bracket No. 1 for rockershaft.	1
DS 124-17a	Bracket No. 4 for rockershaft.	1
DS 124-20b	Exhaust rockers 2 and 4.	2
DS 124-20c	Exhaust rockers 1 and 3.	2

NUMBER	DESCRIPTION	No.OFF
DS 124-21a	Exhaust rockershaft, 16 mm diameter, 66 mm long.	4
DS 124-22	Bracket No. 3 for rockershaft.	
DS 124-22a	Bracket No. 2 for rockershaft.	
DS 124-23	*Support, intermediate for inlet rockershaft (cast). Until May 1960. Replaced by DS 124-23a; order in addition: 2—DS 124-85.*	2
DS 124-23a	*Support, intermediate for inlet rockershaft (steel). May 1960 - March 1964. Replaced by DS 124-23b (R. VI).*	2
DS 124-23b	Support, intermediate, for inlet rockershaft (steel) (R. VI). Since March 1964.	2
DS 124-25	Valve spring, outer (23.6 x 32 x 44. 4).	8
DS 124-26	Cup, upper, for inlet valve spring, 10 mm deep, taper bole (R. VI).	4
DS 124-27	Cup, lower, shouldered for valve spring (13.6 x 17 x 20 x 2. 5) (R. VI).	8
DS 124-78	Cap for securing inlet rockershaft central bole, 10. 5 mm diameter (R. VI).	6
DS 124-80	Spring for exhaust rockershaft (16. 3 x 18. 3 x 14. 5).	4
D 124-85	Washer, 16.5 x 20 x 0.9, for spacing exhaust rockers.	4
DS 124-85	Washer, 18.5 **x** 25 x 1, for spacing inlet rockers. Until May 1960.	4
DS 124-95	Cap for exhaust rockershaft bracket, central hole 7. 5 mm diameter (R. VI).	8

The numbers underlined indicate new parts which do not appear on the illustration

NUMBER	DESCRIPTION	No.OFF
DS 124-97	Thrust washer, lower, for Outer valve spring (22. 1 x 3Z x 0. 5) (R.VI)	8
DS 124-98	Spring for inlet rockers (18. 3 x 21.3 x 59)	4
DM 132-2a	*Cylinder head cover with anchor pin for accelerator return spring. RH. steering. Until February 1961. Replaced by DM 132-2b; order in addition: 4-DS 112-91a, 4-DS 112-92a, 1-DS 132-4a.*	1
DM 132-2b	Cylinder head cover, only, with anchor pin for accelerator spring (U sectioned joint assembly). R. H. steering. February 1961 - October 1962.	1
D5 132-2	*Cylinder head cover, only. L.H. steering. Until February 1961. Replaced by DS 132-2a; order in addition: 4-DS 112-91a, 4-DS112-92a, 1-DS 132-4a.*	1
DS 132-2a	Cylinder head cover, only (U sectioned joint assembly). L. H. steering. February 1961 - May 1962.	1
DS 132-2b	Cylinder head cover with filler pipe incorporated. L. H. steering. Since May 1962. R. H. steering. Since October 1962.	1
DS 132-4	Rubber joint for cylinder head cover. Until February 1961.	1
DS 132-4a	Joint for cylinder head cover (U section). Since February 1961.	1
DS 132-71a	*Stud, 7 diameter x 146 long, threaded 10 and 55, securing cylinder head cover and air filter. Until September 1964. Replaced by DS 132-71b.*	1
DS 132-71b	Stud, 7 x 136 (threaded 10 and S5), securing cylinder head cover and air filter. Since September 1964.	1

NUMBER	DESCRIPTION	No.OFF
DS 132-77	Distance piece for filter element (8 x 10 x 24. 5).	1
DS 132-81	Filler cap (R.VI). Since May 1962.	1
DS 212-113	Cap for sparking plug hole (R. VI). Until March 1962.	4
DS 221-1	Oil filler on cylinder head cover. Until May 1962.	1
DS 221-83	Filter for oil filler (R. VI). Since May 1962.	1
DS 221-92	Joint for oil filler (R. VI). Until May 1962.	
DA 642-9	Side closing plate for cylinder head with heater intake and hole for temperature gauge bulb. AMBULANCE. Until September 1960.	1
DM 642-9b	*Side closing plate for cylinder head with heater intake, 35 mm long. BREAK-COMMERCIAL-FAMILY TYPE. Until November 1964. Replaced by DM 642-9d; order in addition: 1-DM 112-94, 1-2.472-S (R. VI).*	1
DM 642-9c	Closing plate for cylinder head with inlet for temperature gauge bulb (welded nut). AMBULANCE. Since September 1960.	1
DM 642-9d	Closing plate for cylinder head with heater intake and hole for temperature gauge bulb. BREAK-COMMERCIAL-FAMILY TYPE. Since November 1964.	1
482-S	Screw, hex, head, 7 x 12. 5, for securing oil filler (R. III). Until May 1962.	3
483-S	Screw, hex. head, 7 x 15 (R.III) for securing:	
	- side closing plate.	4
	- rear closing plate.	4
	- closing plate and heater inlet.	4
2. 493-S	Nut, hex., 7 x 100 for securing (R. III):	
	- cylinder head cover.	2
	- bracket for exhaust rockershaft.	8

NUMBER	DESCRIPTION	No.OFF
88. 625	Washer, 7. 5 x 20 x 1. 5, under nut securing cylinder head cover	2
451. 397/02	Split cotter for inlet valve cup, height 8 mm (2 parts) (R. I).	4
451. 504	Core plug (30 mm diameter). 1st possibility (R. I).	3
456. 998	Oil seal ring, 7 x 11 x 2.5, for inlet valve stem (R. I).	4
457. 182	Cup for exhaust valve cotters, taper bore hole, height 4. 5 mm (R. I).	4
457. 184/02	Split cotter for exhaust valve cup, height 5.65 mm (2 parts) (R. I).	4
457. 254	Core plug (31 mm diameter). 2nd possibility (R. I).	3
457. 281	Cap on filter element (R. VI).	
457. 287	Oil filler cap (R. VI). Until May 1962.	
457. 295	Filter element on cylinder head cover (65 x 87 x 22) (R. VI).	
457. 298	Joint, 7 x 20 x 2 (R. VI):	
	- for filter element cap.	1
	- under nut securing cylinder head cover.	2
457. 301	Nut, knurled, 7 diameter x 100 pitch, securing cap on filter element (R. I).	1
457. 468	Closing plate, rear, for cylinder head (R. I).	1

The numbers underlined indicate new parts which do not appear on the illustration

NUMBER	DESCRIPTION	No.OFF
457. 469	Joint for rear closing plate for cylinder head (R. VI).	1
461. 113	Tappet adjusting screw (R. I).	8
461. 698	*Locknut, hex., 7 diameter x 100 pitch with collar, for tappet adjusting screw (R. I) Replaced by DX 124-93.*	8
616. 036	Stud, 7 diameter x 5O long, (threaded 10 and 17) securing filter element (R. I).	1

NUMBER	DESCRIPTION	No.OFF
616. 037	Stud, 10 diameter x 90 long (threaded 15 and 20) securing water pump and air filter cover (R. I). Except Export. All Types. Since November 1962	2
616. 038	Stud, 7 diameter x 117 long (threaded 10 and 55) securing cylinder head cover (R. I).	
	Except Export.	1
	Export.	2
	All Types. Since November 1962.	1

NUMBER	DESCRIPTION	No.OFF
616. 039	Stud, 7 diameter x 76. 5 long, (threaded 10 and 17) securing exhaust rockershaft bracket (R. I).	8
616. 040	Stud, 7 diameter x 42. 5 long (threaded 14 and 18), securing exhaust manifold (R. I).	8
616. 051	Stud, 10 diameter x 80 long (threaded 15 and 20), securing water pump cover (R. I). Export. Until November 1962.	2

NUMBER	DESCRIPTION	No. OFF
	SPECIAL PARTS Since May 1964	
DS 132-48	Flexible union on cylinder head cover (R. VI).	1
DS 132-78	Joint for support of flexible union (70 x 88 x 1.5) (R. VI).	1
DS 132-79	Valve connecting cylinder head cover to inlet chamber (R. VI).	1
DS 132-80	Support for flexible union on cylinder head cover, 73 mm diameter (R. VI)	1
DS 132-91	Oil deflector on cylinder head cover, 65 mm diameter (R. VI).	1
DS 132-92b	Tube, rubber, 7 x 16, connecting valve to inlet chamber, 400 mm long.	1
DS 132-93	Sealing joint for air intake sleeve on inlet chamber (9.5 x 20 x 1) (R. VI).	1
DS 132-94	Grille, flame preventing, on cylinder head cover, 70 mm diameter (R. VI).	1
DS 132-95	Sleeve for air intake on inlet chamber, 39 mm long, 1 thread 9 x 125 (R. VI).	1
DS 132-97	Sleeve on air filter, 20 mm diameter (R. VI).	1
DS 141-13b	Inlet chamber with studs and cover plates, 1 threaded 9 x 125, for air intake.	1
DS 141-95a	Cover plate for inlet chamber, 4 holes 8 mm, 1 hole 10.5 mm.	1
484-S	Screw, hex. head, 7 x 17.5, for securing support for flexible union on cylinder head cover (R. III).	1
2.482-S	Washer, plain, 7.5 x 14, for screws securing flexible union support on cylinder head cover (R. III).	1
2.514-S	Washer, shakeproof, 7.3 x 12, for securing flexible union support on cylinder head cover (R. VI).	1
2.556-S	Collar, 160 mm long (R. VI) securing:	
	- valve on flexible union.	1
	- tube connecting valve to inlet chamber.	2
2.994-S	Collar securing flexible union on cylinder head cover (R. VI).	1
614.020	Collar, securing sleeve on flexible union, 113 mm long (R. VI).	1

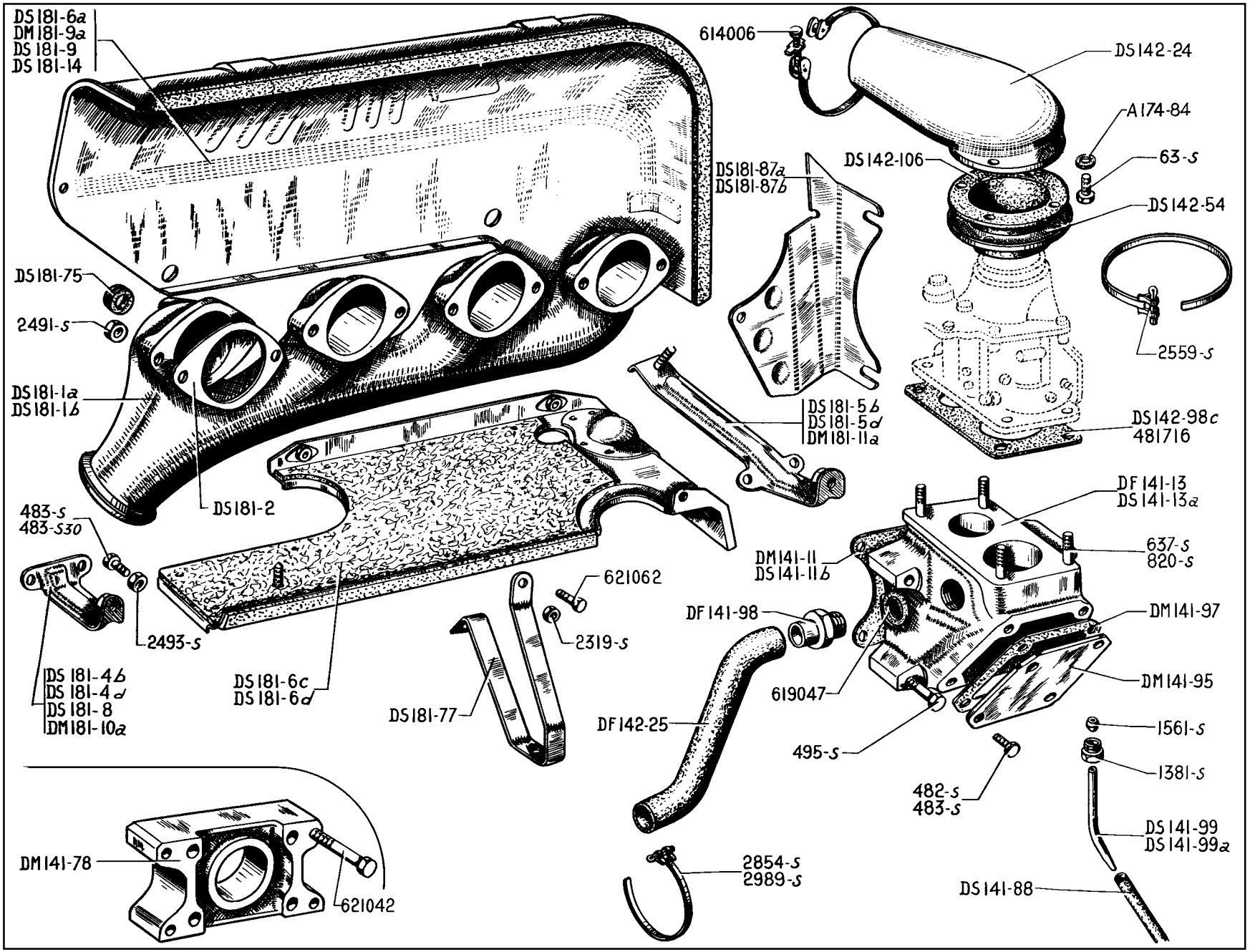
DS181-6a
DM181-9a
DS181-9
DS181-14
614006
DS142-24
A174-84
63-S
DS142-106
DS181-87a
DS181-87b
DS142-54
DS181-75
2491-S
2559-S
DS181-1a
DS181-1b
DS181-5b
DS181-5d
DM181-11a
DS142-98c
481716
DS181-2
DF141-13
DS141-13a
483-S
483-S30
637-S
820-S
DM141-11
DS141-11b
621062
DF141-98
DM141-97
2319-S
2493-S
DS181-4b
DS181-4d
DS181-8
DM181-10a
DS181-6c
DS181-6d
DS181-77
619047
DM141-95
DF142-25
1561-S
495-S
1381-S
482-S
483-S
DS141-99
DS141-99a
DM141-78
2854-S
2989-S
DS141-88
621042

10-MANIFOLDS-CARBURETTOR

NUMBER	DESCRIPTION	No.OFF
	For the carburettor and spare parts, apply direct to Messrs. SOLEX OR WEBER or their official agents.	
A 174-84	Fibre washer, 4.5 x 8 x 0.5 under screw securing air intake pipe (R.VI). Since March 1963.	3
DM 141-11	Joint for inlet housing, central hole 35. 5 to 36. 25 maximum (R. VI). Until March 1963.	1
DS 141-11b	Joint for inlet housing on cylinder head (one central hole 41. 5 to 42. 5 maximum) (R. VI). Since March 1963.	1
DF 141-13	Inlet housing, with studs and baffle plate (threaded for water inlet 20 diameter x 150 pitch). Until March 1963.	1
DS 141-13a	Inlet housing, with studs and baffle plate, passage for gas, round section. Since March 1963.	1
DM 141-78	Distance piece for inlet housing (barometric corrector assembly). Until March 1963.	1
DS 141-88	Rubber petrol drain tube (4 x 11 x 250)	1
DM 141-95	Cover plate for inlet housing.	1
DM 141-97	Paper joint for cover plate of inlet housing (R. VI).	1
DF 141-98	Union for water outlet (threaded 20 diameter x 150 pitch x 19 external diameter).	1
DS 141-99	Petrol drain pipe (3 x 4.5 x 60). Until March 1963.	1
DS 141-99a	Petrol drain pipe (3. 5 x 4.5 curved) on inlet housing. Since March 1963.	

NUMBER	DESCRIPTION	No.OFF
DS 142-24	Air inlet pipe on carburettor. Since March 1963.	1
DF 142-25	Flexible pipe for carburettor heating, internal diameter 18 mm.	1
DS 142-54	Cup securing union shoulder of air pipe (72 x 93 x 3). Since March 1963.	1
DS 142-98c	Distance piece under carburettor, 1 hole 33 mm diameter, 1 hole 25 mm diameter, 5 mm thick (R. VI). Since March 1963.	1
DS 142-106	Flexible shouldered union for air pipe (65 x 71 x 90 x 20). Since March 1963.	1
DS 181-1a	Exhaust manifold. Until September 1962.	1
DS 181-lb	Exhaust manifold (exhaust silencer under front seat). Since September 1962.	1
DS 181-2	Joint, copper and asbestos between exhaust manifold and cylinder head (R. VI). Until May 1964.	4
DS 181-4b	Bracket, front, for exhaust shield (with welded screw). Left-hand steering. Until September 1962.	1
DS 181-4d	Bracket, front, for exhaust shield. Since September 1962.	1
DS 181-5b	Bracket, rear, for exhaust shield (with welded screw). Left-hand steering. Until September 1962.	1
DS 181—5d	Bracket, rear, for exhaust shield. Since September 1962.	1
DS 181-6a	Exhaust shield (R. VI). Left-hand steering. Until September 1962.	1
DS 181-6c	*Exhaust shield, lower part. Left-hand steering. September 1962 - June 1963. Replaced by DS 181 -6e; order in addition 1-DS181-71.*	

NUMBER	DESCRIPTION	No.OFF
DS 181-6d	Exhaust shield, lower part. Right-hand steering. Since September 1962.	
DS 181-6e	Exhaust shield, lower part. Left-hand steering. Since June 1963.	
DS 181—8	Front retaining plate for exhaust manifold shield. Until September 1962.	
DM 181-9a	Exhaust shield. Right-hand steering. Until September 1962.	
DS 181-9	Exhaust shield, upper part. Right-hand steering. Since September 1962.	
DM 181-10a	Bracket, front, for shield. Right-hand steering. Until September 1962.	
DM 181-11a	Bracket, rear, for shield. Right-hand steering. Until September 1962.	
DS 181-14	Exhaust shield, upper part. Left-hand steering. Since September 1962.	
DS 181-71	Plug for closing spanner opening, on lower part of exhaust shield, 30 mm diameter (R. VI). Since June 1963.	
DS 181-75	Grommet for exhaust shield, 10 x 20 x 6 (R. VI). Since September 1962.	4
DS 181-77	Plate securing lower and upper shields on manifold. Since September 1962.	
DS 181-87a	Rear closing panel for shield. Until September 1962.	

The numbers underlined indicate new parts which do not appear on the illustration

NUMBER	DESCRIPTION	No.OFF
DS 181-87b	Closing plate for exhaust shield. Since September 1962.	1
HY 181-2	Joint between exhaust manifold and cylinder head, central bole 37 mm (R. VI). Since May 1964.	4
63-S	Screw, hex, head, 4 diameter x 10 long, securing cup of shouldered union on air pipe (R. III). Since March 1963.	3
482-S	Screw, hex, head, 7 diameter x 12. 5 long, securing closing plate (R. III). Until March 1963.	4
483-S	Screw, hex, head, 7 diameter x 15 long (R. III) securing: Since March 1963.	4
	- closing plate for inlet housing.	2
	- shield on bracket.	
483-S 30	Screw, hex, head, pointed, 7 diameter x 15 long, securing upper shield on lower shield and brackets (R. III). Since September 1962.	4
495-S	Screw, hex, head, 7 diameter x 45 long, securing inlet housing (R. III). Except barometric corrector assembly.	4
637-S	Stud, 7 diameter x 35. 5 long, (threaded 10. 5 and 17), securing carburettor (R. III). Since March 1963.	4

NUMBER	DESCRIPTION	No.OFF
820-S	Stud, 8 diameter x 44 long (threaded 18 and 12), securing carburettor (R. III). Until March 1963.	2
1.381-S	Union screw, 10 diameter x 100 pitch (12 mm long), securing petrol drain pipe (R. III).	1
1.561-S	Union, biconical, 4.5 diameter for petrol drain pipe (R. III).	1
2. 3 19-5	Nut, hex., 5 diameter x 75 pitch (R. III) securing: Since September 1962.	
	- upper shield on plate DS 181-77.	1
	- plate DS 181-77 on lower shield.	1
2. 491-5	Nut, hex., 7 diameter x 100 pitch (height 7 mm) securing exhaust manifold (R. III).	8
2.493-S	Nut, hex., 7 diameter x 100 pitch, securing exhaust shield (R. III).	
	Until September 1962.	2
	Since September 1962.	1
2. 559-S	Clip securing shouldered union of air pipe on carburettor (R. VI). Since March 1963.	1

NUMBER	DESCRIPTION	No.OFF
2.854-5	Clip (5 mm wide, 208 mm long), securing heater pipe on carburettor (R. VI). Until March 1963.	2
2.989-S	Clip (5 mm wide, 245 mm long), securing heater pipe of carburettor (R. VI). Since March 1963.	2
481. 716	Distance piece for carburettor, central hole 34 mm diameter, 5 mm thick (R. VI). Until March 1963.	1
614. 006	*Clip for securing union on carburettor (R. VI). Until March 1963. Replaced by 2.559-S.*	1
619. 047	Joint for water outlet union (20.5 x 26 x 1.5 to 2) (R. VI).	1
621.042	Screw, hex, head, 7 diameter x 85 long, securing inlet housing (barometric corrector assembly) (R. II). Until March 1963.	4
621. 062	Screw, hex, head, 5 diameter x 14 long, securing upper shield on plate DS 181—77 (R. III). Since September 1962.	1

The numbers underlined indicate new parts which do not appear on the illustration.

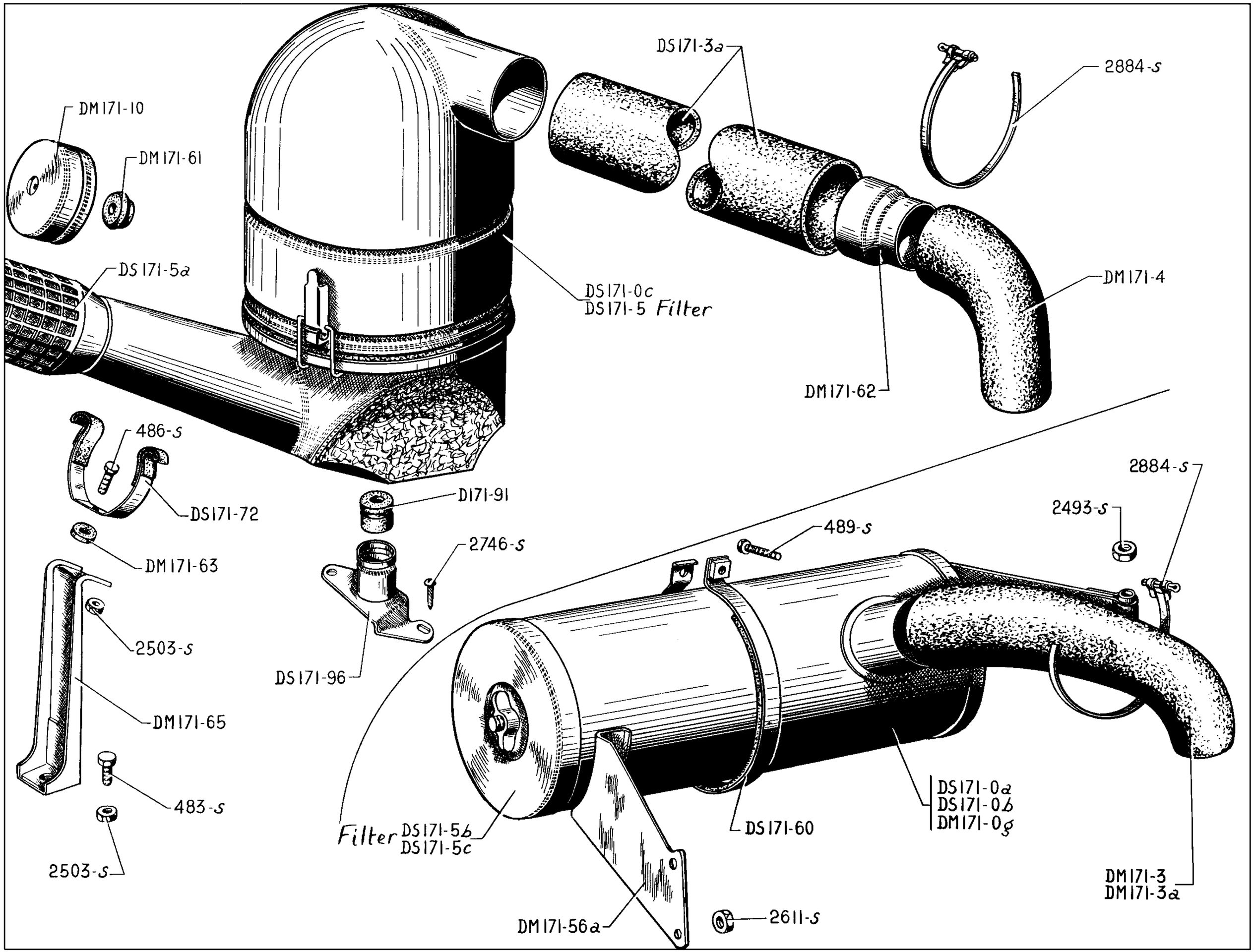
DS171-3a
2884-s
DM171-10
DM171-61
DS171-5a
DS171-0c
DS171-5 Filter
DM171-4
DM171-62
486-s
DS171-72
D171-91
2884-s
2493-s
489-s
2746-s
DM171-63
2503-s
DS171-96
DM171-65
483-s
2503-s
Filter DS171-5b
DS171-5c
DS171-60
DS171-0a
DS171-0b
DM171-0g
DM171-3
DM171-3a
DM171-56a
2611-s

NUMBER	DESCRIPTION	No. OFF
	DRY AIR FILTER LEFT-HAND STEERING except EXPORT	
DS 171-0a	Air filter, Miom (R. VI). Until September 1964.	1
DS 171-0b	Air filter, Lautrette (R. VI). Until September 1964.	1
DS 171-0f	Air filter, Miom, without front support (R. VI). Since September 1964.	1
DS 171-0g	Air filter, Lautrette, without front support (R. VI). Since September 1964.	1
DM 171-3	Elbowed rubber union between air filter and air pipe. Until March 1963.	1
DM 171-3b	Union, flexible, between air filter and carburettor (U. S. A.). Since May 1964.	1
DS 171-3	Union, elbowed rubber, between air filter and air pipe (R. VI). Since March 1963.	1
DS 171-5b	Filter element, Miom (R. VI).	1
DS 171-5c	Filter element, Lautrette (R. VI).	1
DS 171-56	Front support for air filter. Since September 1964.	1
DS 171-60	Collar securing filter on front support (R. VI). Since September 1964.	1
489-S	Screw, hex. head, 7 x 30, for securing collar DS 171-60 (R. III). Since September 1964.	1
2.493-S	Nut, hex., 7 x 100, for securing filter on cylinder head (R. III).	1
2.611-S	Nut, hex., 10 x 150, for securing air filter on water pump cover (R. III).	2

NUMBER	DESCRIPTION	No. OFF
2.884-S	Collar securing union on filter (R. VI).	2
	AIR FILTER, OIL BATH, LEFT-HAND STEERING EXPORT (RIGHT-HAND STEERING except EXPORT Until September 1962) (RIGHT-HAND STEERING EXPORT Until July 1963)	
DS 171-0c	Air filter, Miom.	1
DS 171-3a	Union, flexible, between air filter and carburettor (71.5 x 80 x 400) (R. VI).	1
DM 171-4	Rubber elbow on carburettor (R. VI).	1
DS 171-5	Filter element for filter DS 171-0c (R. VI).	1
DS 171-5a	Filter element on air intake (R. VI).	1
DM 171-10	Cup for oil measure (R. VI).	1
DM 171-61	Rubber washer for oil measure cup (R. VI).	1
DM 171-62	Liner, steel, for joining elbowed connection on carburettor and union on filter.	1
DM 171-63	Packing piece, rubber, 7.5 x 25 x 8, retaining air filter.	1
DM 171-65	Bracket, front, retaining air filter.	1
DS 171-72	Clip for air inlet.	1
D 171-91	Bush, rubber, 9.8 x 30 x 22, for securing air filter.	1
DS 171-96	Bracket, rear, for air filter.	1
483-S	Screw, hex. head, 7 x 15, for securing air inlet tube (R. III).	1

NUMBER	DESCRIPTION	No. OFF
486-S	Screw, hex. head, 7 x 22.5, for securing clip for air inlet pipe (R. III).	1
2.503-S	Nut, hex., 7 x 100, for securing (R. III):	
	- clip for air inlet pipe on bracket.	1
	- for bracket.	1
2.746-S	Screw, Parker, round head, cruciform slot, 4.85 x 16, for securing rear bracket (R. VI).	2
2.884-S	Clip for tightening union on air filter (R. VI).	2
	DRY AIR FILTER (RIGHT-HAND STEERING except EXPORT Since September 1962)	
DM 171-0g	Air filter, Miom (R. VI). Until September 1964.	1
DM 171-0j	Air filter, Miom. Securing clip 15 mm (R. VI). Since September 1964.	1
DM 171-3a	Elbowed rubber union between air filter and air pipe. Until September 1964.	1
DS 171-3	Elbowed rubber union between air filter and air pipe. Since September 1964.	1
DM 171-56a	Front bracket for filter.	1
DS 171-60	Clip for tightening filter on front support (R. VI).	1
489-S	Screw, hex. head, 7 x 30, tightening clip DS 171-60 (R. III).	1

The numbers underlined denote new parts which do not appear on the illustrations.

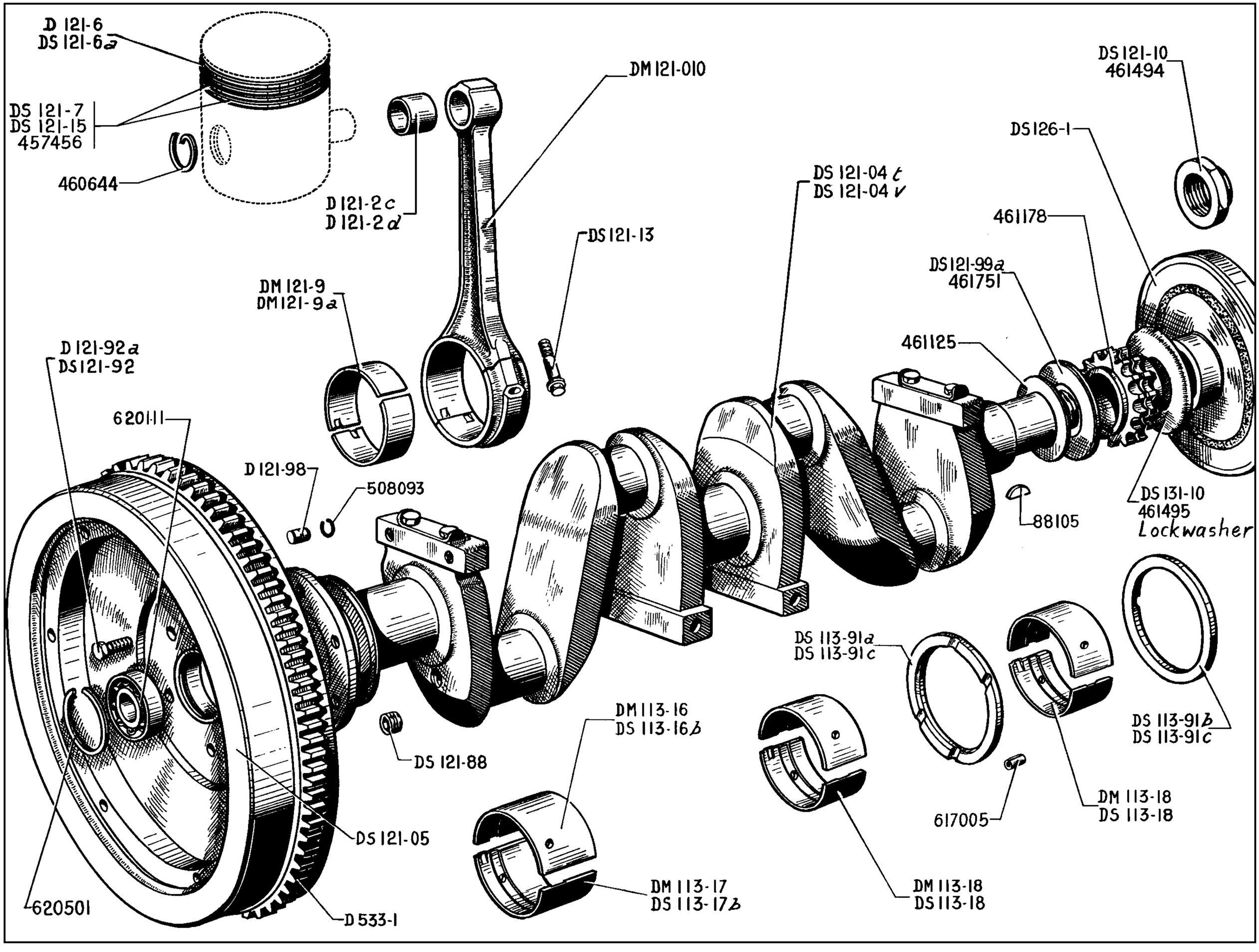
D 121-6
DS 121-6a
DS 121-7
DS 121-15
457456
460644
D 121-2c
D 121-2d
DM 121-010
DS 121-13
DM 121-9
DM 121-9a
DS 121-04 t
DS 121-04 v
DS 121-10
461494
DS126-1
461178
DS121-99a
461751
461125
D 121-92a
DS121-92
620111
D 121-98
508093
88105
DS 131-10
461495
Lockwasher
DS 113-91a
DS 113-91c
DS 113-91b
DS 113-91c
DM 113-16
DS 113-16b
DS 121-88
DM 113-18
DS 113-18
617005
DS 121-05
DM 113-17
DS 113-17b
DM 113-18
DS 113-18
620501
D 533-1

NUMBER	DESCRIPTION	No. OFF
	NOTE - Pistons and gudgeon pins are not supplied separately. See cylinder barrel and piston assemblies (page 2).	
	Top half front bearing, lubricating groove 18.6 mm from positioning dowel, 54.3 mm long (R. VI):	1
DM 113-16	Bore 53.5 mm, 2nd possibility.	
DS 113-16b	Bore 54 mm, 1st possibility.	
	Bottom half of front bearing, lubricating groove 3 mm from positioning dowel, 54.3 mm long (R. VI).	1
DM 113-17	Bore 53.5 mm, 2nd possibility.	
DS 113-17b	Bore 54 mm, 1st possibility.	
DM 113-18	Half bearing, 53.5 mm, top and bottom, centre and rear, 37 mm long, 2nd possibility (R. VI).	4
DS 113-18	Half bearing, 54 mm, top and bottom, centre and rear, 37 mm long, 1st possibility (R. VI).	4
DS 113-91a	Inner ring for rear bearing (58.1 x 72 x 4.03, internal diameter bevelled) (R. VI). Until January 1961.	1
DS 113-91b	Outer ring for rear bearing (58.1 x 72 x 4.03, without bevel on internal diameter) (R. VI). Until January 1961.	1
DS 113-91c	Bearing ring, timing side (58 x 72 x 2.3) (R. VI). Since January 1961.	2
DM 121-04u	Crankshaft, main bearing diameter 54 mm, con-rod journal 48 mm diameter (engine flywheel secured with 10 mm diameter screws) oil seal ring 9.5 mm to replace DS 121-04v.	1
DS 121-04t	*Crankshaft main bearing, 54 mm diameter, connecting rod journal 48 mm diameter, tapped for fixing flywheel, 10 diameter x 125 pitch (fitted with 6 screws DS 121-92) damper assembly. March 1963 - October 1965. Replaced by DS 121-04z. Order in addition: 1-DS 113-02a.*	1

NUMBER	DESCRIPTION	No. OFF
DS 121-04v	Crankshaft, main bearing 54 mm diameter, connecting rod journal 48 mm diameter, (flywheel fixing by 10 mm diameter screws). June 1962 to March 1963. Replaces earlier types, see Technical Note No. 739.	1
DS 121-04z	Crankshaft, main bearing 54 mm diameter, con-rod journal 48 mm, sealing ring 65.6 mm diameter x 9.5 mm wide. Since October 1965.	1
DS 121-05	Engine flywheel with starter gear ring, total thickness 84 mm, (fixing by 10 mm diameter screws). Since June 1962, replaces earlier types.	1
DM 121-010	Connecting rod with 48 mm diameter bearing, 27 mm wide (body stamped DS 121-11, thickness of body 22 mm).	4
D 121-2c	Small end bush (20 x 21.5 x 25). 1st possibility (R. VI).	4
D 121-2d	Small end bush (20 x 21.7 x 25). 2nd possibility (R. VI).	4
D 121-6	Piston ring, tapered, 78 x 2.5. Until January 1962.	4
DS 121-6a	Piston ring, cylindrical, chrome, 78 x 2 (R. VI).	4
DS 121-7	Oil scraper ring, chrome, 78 x 2.5. Since January 1962.	4
DM 121-9	Half shell bearing for connecting rod, 48 mm diameter, 27 mm wide (1st possibility) (R. VI).	8
DM 121-9a	Half shell bearing for connecting rod, 47.5 diameter, 27 mm wide (2nd possibility) (R. VI).	8
DS 121-10	Nut, hex., 36 diameter x 150 pitch, locking damper on crankshaft. Since March 1963.	1
DS 121-13	Screw, hex. head, 9 diameter x 29 long, securing big end cap (marked 1 on the head).	8
DS 121-15	Oil scraper ring, 78 x 5. Since January 1962.	4
DS 121-22	Washer, 38.5 x 44.5 x 0.03, for adjusting crankshaft. Since March 1963.	As nec.

NUMBER	DESCRIPTION	No. OFF
DS 121-88	Plug for oil ducts to crank pins (threaded 22 diameter x 125 pitch) (R. VI).	4
D 121-92a	Screw, hex. head, 9 diameter x 17 long, securing flywheel (17 across flats). Until June 1962.	6
DS 121-92	Screw, hex. head, 10 diameter x 17 long, securing flywheel. Since June 1962.	6
D 121-98	Dowel, 10 diameter x 16 long, for locating flywheel on crankshaft (1st possibility) (R. VI).	1
DS 121-98	Dowel, 10 and 10.5 diameter x 16 mm long, for locating flywheel on crankshaft (2nd possibility) (R. VI).	1
DS 121-99a	Thrust washer, 38 x 74 x 6.7, for crankshaft. Since January 1961.	1
DS 126-1	Damper (R. VI). Since March 1963.	1
DS 131-10	Oil seal washer on crankshaft (38.5 x 73 x 3) damper assembly. Since March 1963.	1
D 533-1	Starter gear ring (93 teeth), internal diameter 272 mm.	1
88.105	Woodruff key, 18.5 x 4.6 x 7.9, for crankshaft pinion (R. II).	1
457.456	Scraper ring, 78 x 4 (R. I). Until January 1962.	8
460.644	Circlip for gudgeon pin (R. I).	8
461.125	Washer, 38.5 x 44.5 x 0.05, for crankshaft adjustment (R. I).	As nec.
461.178	Pinion for crankshaft (19 teeth) (R. I).	1
461.494	Nut, hex., 36 diameter x 150 pitch, securing crankshaft pinion (R. VI). Until March 1963.	1
461.495	Lockplate, round, 36.5 mm diameter for crankshaft nut (R. I). Until March 1963.	1
461.751	Washer, 38 x 73 x 5, for crankshaft thrust (R. I). Until January 1961.	1
508.093	Circlip for dowel centring engine flywheel, 8.8 x 10.8 (R. I).	1
617.005	Pin, mecanindus, 5 x 10, locking bearing ring (timing side) (R. VI).	2
620.111	Ball bearing, 15 x 42 x 13, with double sealing flange (R. VI).	1
620.501	Circlip, 44.7 mm diameter, retaining rear crankshaft spigot bearing (R. VI).	1

The numbers underlined indicate new parts which do not appear in the illustration.

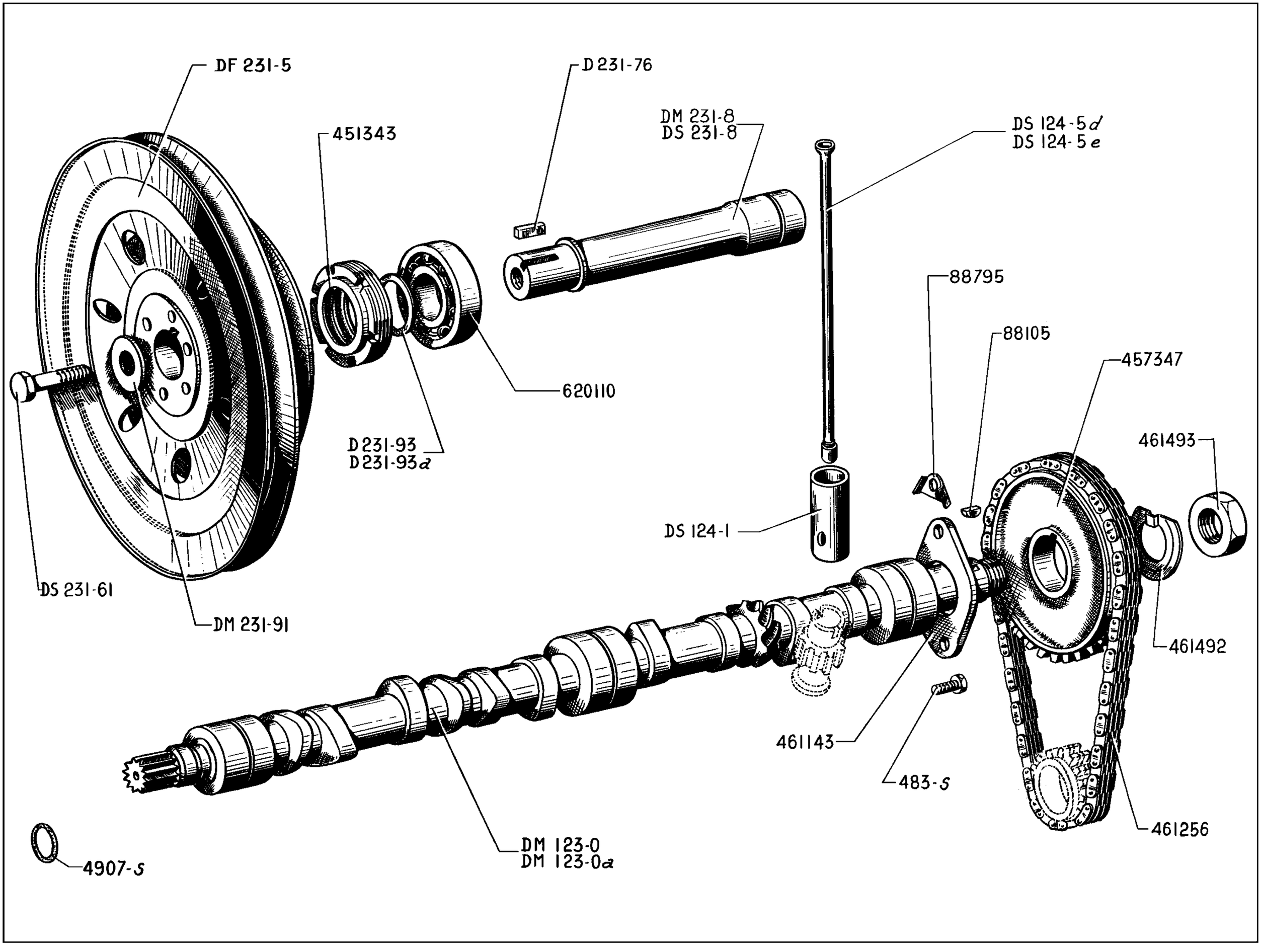
DF 231-5
451343
D 231-76
DM 231-8
DS 231-8
DS 124-5d
DS 124-5e
88795
88105
457347
461493
620110
D 231-93
D 231-93a
DS 124-1
DS 231-61
DM 231-91
461492
461143
483-S
461256
DM 123-0
DM 123-0a
4907-S

NUMBER	DESCRIPTION	No. OFF
DM 123-0	Camshaft, externally splined end piece. Until July 1961.	1
DM 123-0a	Camshaft with toothed end piece for driving shaft (shaft centre). Since July 1961.	1
DS 124-1	Tappet for push-rod, 26 mm diameter, spherical diameter 14 mm.	8
DS 124-5d	Push-rod for inlet rocker, 225 mm long, spherical diameter 14 mm.	4
DS 124-5e	Push-rod for exhaust rocker, 251 mm long. spherical diameter 14 mm.	4
DF 231-5	Pulley, triple groove, driving water pump, dynamo and suspension pump.	1
DM 231-8	Shaft, driving water pump, dynamo and suspension pump (shaft centre). Since July 1961.	1
DS 231-8	Shaft, driving water pump, dynamo and suspension pump (toothed end piece, threaded 10 diameter x 100 pitch). Until July 1961.	1

NUMBER	DESCRIPTION	No. OFF
DS 231-61	Screw, hex. head, 10 diameter x 30 long, securing pulley.	1
D 231-76	Key, rectangular, 4 x 4 x 21, for driving pulley (R. VI).	1
DM 231-91	Washer, 10.5 x 28 x 5, under screw securing pulley.	1
D 231-93	Pulley adjusting washer, 20.5 x 27 x 0.5 mm thick.	As nec.
D 231-93a	Pulley adjusting washer, 20.5 x 27 x 0.8 mm thick.	As nec.
483-S	Screw, hex. head, 7 diameter x 15 long, securing camshaft thrust plate (R. III).	2
4.907-S	Ring seal, 18.4 x 23.8 x 2.7, on splined end of camshaft (R. VI). Until July 1961.	1
88.105	Woodruff key, 18.5 x 4.6 x 7.9, for camshaft pinion (R. II).	1

NUMBER	DESCRIPTION	No. OFF
88.795	Lockwasher, single, for 8.5 mm diameter screw securing camshaft thrust plate (R. I).	2
451.343	Locknut on driveshaft bearing (external thread 50 diameter x 150 pitch) (oil return thread, internal diameter 28) (R. I).	2
457.347	Camshaft pinion (38 teeth, length of boss 27.6 mm) (R. I).	1
461.143	Camshaft thrust plate (R. I).	1
461.256	Chain for timing gears (R. VI).	1
461.492	Lockwasher, round, 24.5 mm diameter for nut securing pinion on camshaft (R. I).	1
461.493	Nut, hex., 24 diameter x 150 pitch, securing pinion on camshaft (R. I).	1
620.110	Ball bearing, front, 20 x 47 x 14 (twin sealing plate) for front of camshaft (R. VI).	1

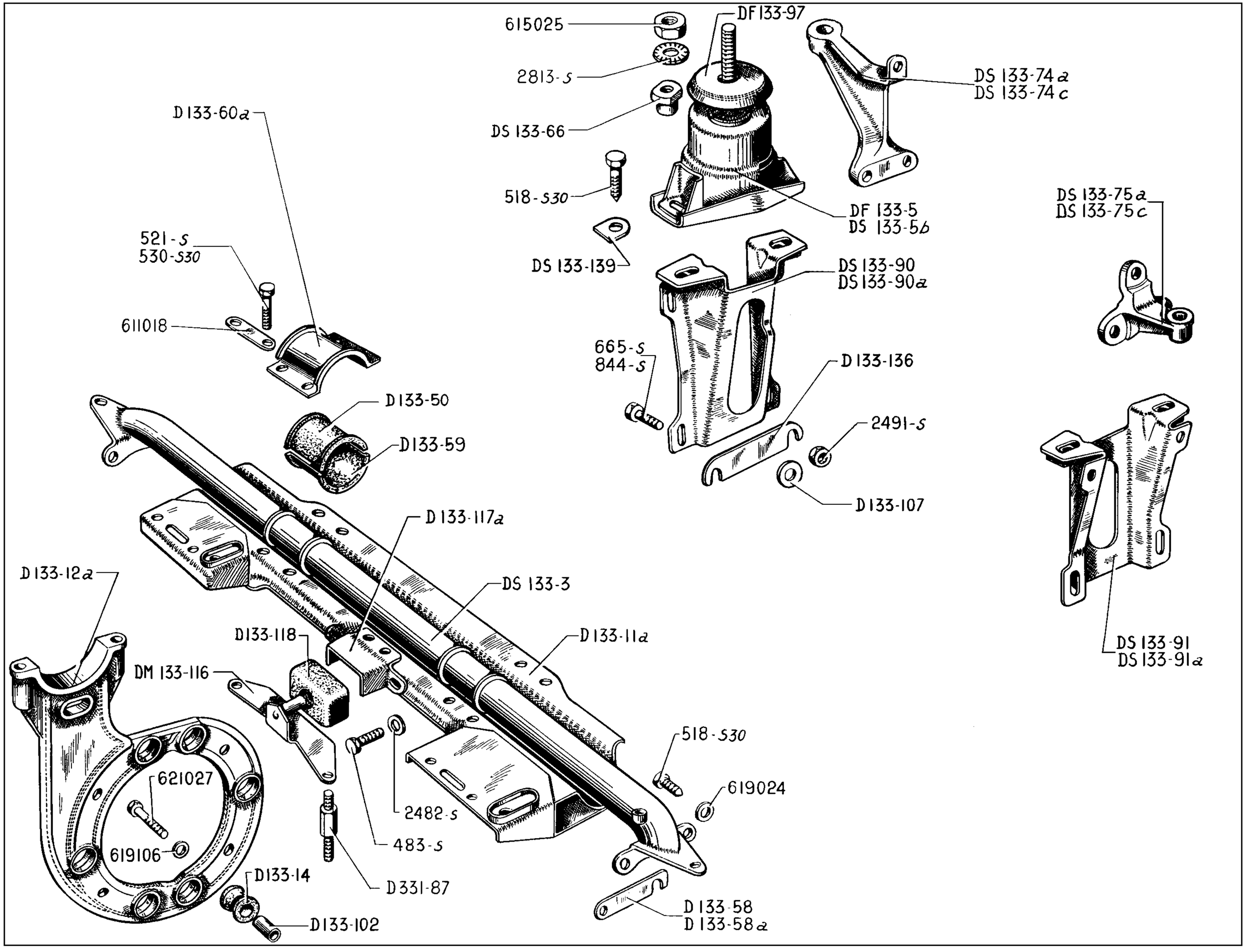
615025
DF 133-97
2813-S
DS 133-66
DS 133-74a
DS 133-74c
D133-60a
518-S30
DF 133-5
DS 133-5b
DS 133-75a
DS 133-75c
521-S
530-S30
DS 133-139
DS 133-90
DS 133-90a
611018
665-S
844-S
D133-136
D133-50
D133-59
2491-S
D133-107
D133-117a
D133-12a
DS 133-3
D133-118
D133-11a
DS 133-91
DS 133-91a
DM 133-116
518-S30
621027
619024
2482-S
619106
483-S
D133-14
D331-87
D133-58
D133-58a
D133-102

NUMBER	DESCRIPTION	No. OFF
	FRONT	
	Gearbox	
DS 133-3	Crossmember, front, upper, fixed by 2 caps.	1
D 133-11a	*Crossmember, front, lower. Until April 1963. Replaced by DS 133-11 order in addition: 2-DS 133-59.*	1
DS 133-11	*Crossmember, front, lower. April 1963 - April 1964. Replaced by DS 133-11a.*	1
DS 133-11a	Crossmember, front, lower. Since April 1964.	1
D 133-12a	Arm, front, right and left-hand.	2
D 133-14	Rubber bearing for front arm, 14 mm diameter, length 20.5 mm.	12
D 133-50	Rubber half bush, upper, for front suspension, length 58 mm, height 32 mm.	2
D 133-58	Packing for crossmember, front, upper, 1 mm thick.	As nec.
D 133-58a	Packing for crossmember, front, upper, 2 mm thick.	As nec.
D 133-59	*Rubber half bush, lower, for front suspension, length 58 mm, height 28.5 mm. Until April 1963. Replaced by DS 133-59.*	2
DS 133-59	Rubber half bush, lower, for front suspension. Since April 1963.	2
D 133-60a	Clamp, right and left-hand on upper front crossmember, 4 holes 10.75 mm diameter.	2
D 133-102	Bush, 9 x 14 x 19, for front bracket rubber bearing.	12
DM 133-116	Bracket for end thrust block.	1
D 133-117a	Housing for end thrust block.	1
D 133-118	End thrust block, 51 x 30 x 30, 1 hole 12.5 mm diameter.	1
D 331-87	Stud securing end thrust block bracket.	2
483-S	Screw, hex. head, 7 diameter x 15 long, securing centre cap on front crossmember (R. III).	4
518-S 30	Screw, hex. head, pointed, 9 diameter x 30 long, securing upper front crossmember on side-member (R. III).	6
521-S	Screw, hex. head, 9 diameter x 16 long, securing lower cross-member on front bracket (R. III).	4
530-S 30	Screw, hex. head, pointed, 9 diameter x 22 long, securing right and left-hand caps on front bracket (R. III).	4
2.482-S	Washer, 7.5 x 14, for screw securing thrust block housing (R. III).	4
611.018	Lockwasher, double, 10.3 mm diameter for screw securing upper crossmember on lower crossmember (R. III).	4
619.024	Washer for screw securing upper front crossmember on side-member (R. II).	6
619.106	Washer, 9.5 x 24 x 2 under head of screw securing front bracket (R. III).	12
621.027	Screw, hex. head, 9 diameter x 50 long, securing front bracket (R. II).	12
	REAR OF ENGINE	
DF 133-5	*Flexible block, rear, with 16 mm diameter stud (grey paint mark). Until September 1962. Replaced by DS 133-5b.*	2
DS 133-5b	Flexible block, rear, with 16 mm diameter stud (green paint mark). Since September 1962.	2
DS 133-66	Nut, round (2 flats) 16 diameter x 125 pitch, for adjusting rear flexible block.	2
DS 133-74a	Rear engine suspension bracket, right-hand, with hole for 16 mm diameter stud. Until September 1962.	1
DS 133-74c	Rear engine suspension bracket, right-hand, with hole for 16 mm diameter stud. Since September 1962.	1
DS 133-75a	Rear engine suspension bracket, left-hand, with hole for 16 mm diameter stud. Until September 1962.	1
DS 133-75c	Rear engine suspension bracket, left-hand, with hole for 16 mm diameter stud. Since September 1962.	1
DS 133-90	Engine suspension mounting bracket, right-hand. Until September 1962.	1
DS 133-90a	Engine suspension mounting bracket, right-hand. Since September 1962.	1
DS 133-91	Rear engine suspension mounting bracket, left-hand. Until September 1962.	1
DS 133-91a	Rear engine suspension mounting bracket, left-hand. Since September 1962.	1
DF 133-97	Protection shield for right-hand rear flexible engine suspension block. Right-hand steering (R. VI). January 1961 - June 1964.	1
DS 133-97	Protection shield for right-hand rear flexible engine suspension block. All Types. Since June 1964.	1
D 133-107	Washer, 7.5 x 26 x 4, for nut securing rear supports on reinforcements.	8
D 133-136	*Packing piece for adjusting rear bracket. No longer supplied.*	As nec.
DS 133-139	Thrust plate for screw securing rear flexible suspension block on bracket, 1 hole 9.5 mm diameter.	4
518-S 30	Screw, hex. head, 9 diameter x 30 long, securing rear flexible suspension block on bracket (R. III).	4
665-S	Screw, hex. head, 8 diameter x 20 long, securing rear suspension bracket to cylinder block (R. III).	2
844-S	Screw, hex. head, 10 diameter x 20 long, securing rear suspension bracket to cylinder block (R. III).	4
2.491-S	Nut, hex., 7 diameter x 100 pitch, securing rear brackets on reinforcements (R. III).	8
2.813-S	Washer, shakeproof, 16.5 x 26, for locking nut on rear flexible suspension block (R. VI).	2
615.025	Nut, hex., 16 diameter x 125 pitch, for rear flexible block (R. III).	2

The numbers underlined indicate new parts which do not appear on the illustration.

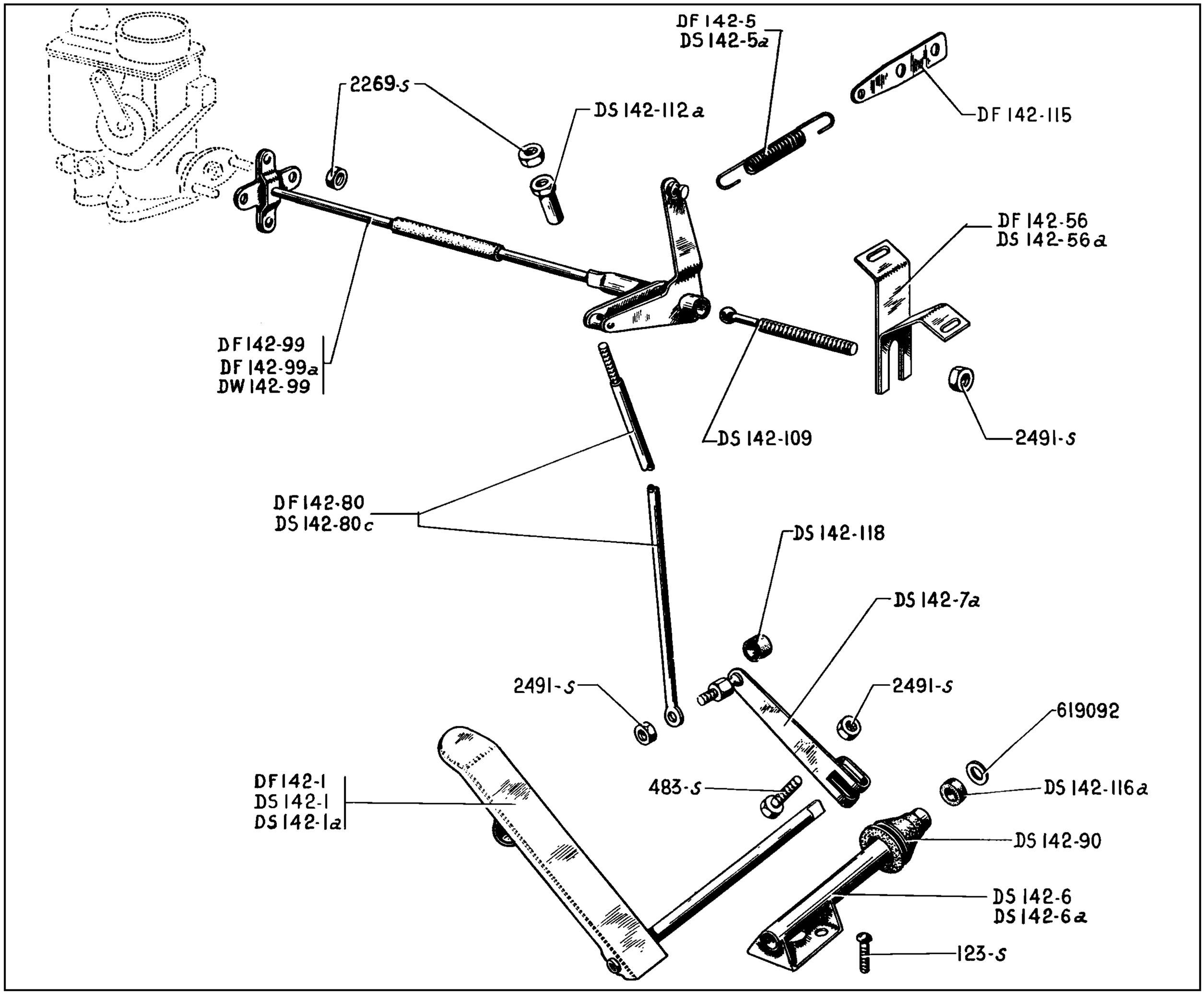
DF 142-5
DS 142-5a
2269-s
DS 142-112a
DF 142-115
DF 142-56
DS 142-56a
DF 142-99
DF 142-99a
DW 142-99
DS 142-109
2491-s
DF 142-80
DS 142-80c
DS 142-118
DS 142-7a
2491-s
2491-s
619092
DF 142-1
DS 142-1
DS 142-1a
483-s
DS 142-116a
DS 142-90
DS 142-6
DS 142-6a
123-s

NUMBER	DESCRIPTION	No. OFF
DF 142-1	Accelerator pedal, total length 185 mm, height of stop 18 mm. Until July 1961.	1
DS 142-1	*Accelerator pedal, total length 178 mm, height of stop 26 mm. July 1961 to September 1962. Replaced by DS 142-1a.*	1
DS 142-1a	Accelerator pedal, height of stop 29 mm. Since September 1962.	1
DF 142-5	*Accelerator return spring. Until October 1960. Replaced by DS 142-5a.*	1
DS 142-5a	Accelerator return spring. Since October 1960.	1
DS 142-6	*Bushed bearing tube for pedal shaft. Until September 1962. Replaced by DS 142-6a.*	1
DS 142-6a	Bushed bearing tube for pedal shaft. Since September 1962.	1
DS 142-7a	Lever on pedal shaft.	1
DF 142-56	Metal bracket for accelerator control on scuttle. Until March 1963.	1
DS 142-56a	Metal bracket for accelerator control on scuttle. Since March 1963.	1

NUMBER	DESCRIPTION	No. OFF
DF 142-80	Control rod, 507 mm long (4 mm diameter on 50 mm length). Until July 1961.	1
DS 142-80c	Control rod, 565 mm long (4 mm diameter on 50 mm length). Since July 1961.	1
DS 142-90	Sealing sleeve for accelerator pedal shaft.	1
DF 142-99	Intermediate control rod. Distance between centres of control arm 36 mm; return arm 50 mm. Until July 1961.	1
DF 142-99a	Intermediate control rod. Distance between centre of control arm 50 mm; return arm 50 mm. July 1961 - March 1963.	1
DW 142-99	Intermediate control for accelerator Since March 1963.	1
DS 142-109	Ball pin for intermediate control rod, 10 mm diameter, length 75 mm.	1
DS 142-112a	Nut, hex., with collar, 4 diameter x 75 pitch, total length 15 mm for control rod adjustment.	1

NUMBER	DESCRIPTION	No. OFF
DF 142-115	Anchor plate for accelerator return spring. Until October 1960.	1
DS 142-116a	Felt washer, anti-rattle, on pedal shaft (9.5 x 17 x 5). (R. VI).	1
DS 142-118	Rubber bush, anti-rattle, for control rod ball joint (11 x 16 x 11).	2
123-S	Screw, round head, 5 diameter x 10 long, securing pedal shaft bearing tube to floor (R. III).	2
483-S	Screw, hex. head, 7 diameter x 15 long, securing lever to pedal (R. III).	1
2.269-S	Nut, hex., 4 diameter x 75 pitch (R. III):	
	- for control rod adjustment.	1
	- securing rod on lever. Until May 1963.	2
2.491-S	Nut, hex., 7 diameter x 100 pitch (R. III) securing:	
	- accelerator control rod bracket.	2
	- ball pin.	2
	- lever on pedal.	1
619.092	Washer, 10.5 x 16 x 1, for felt washer on accelerator shaft (R. I).	1
621.068	Screw, hex. head, 4 x 7, for securing relay control (R. VI). Since May 1963.	2

The numbers underlined indicate new parts which do not appear in the illustration.

24 - ACCELERATOR CONTROL - (RIGHT-HAND steering)

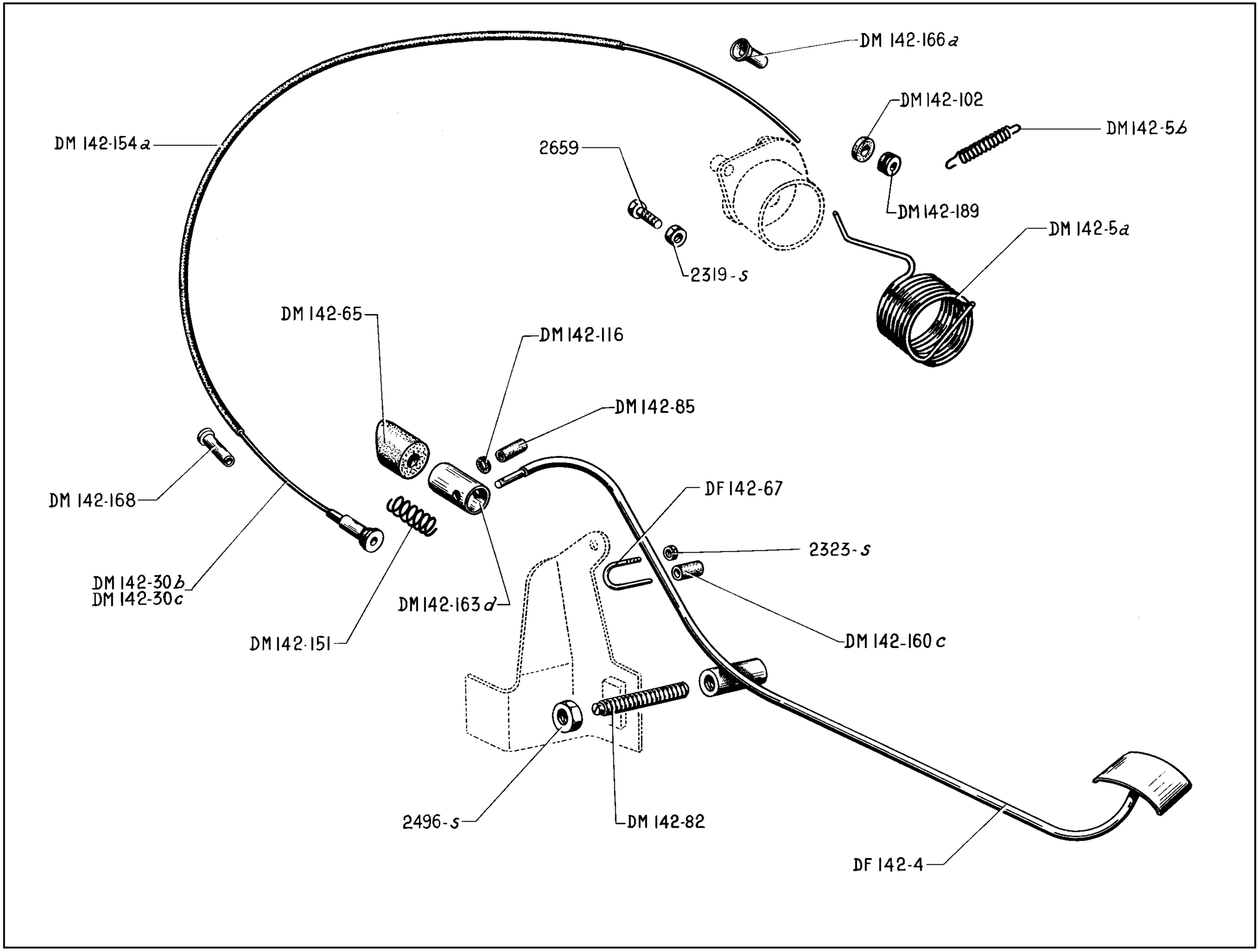

NUMBER	DESCRIPTION	No. OFF
	Until October 1962	
DF 124-4	Accelerator pedal.	1
DM 142-5a	Return spring for accelerator control. Until October 1960.	1
DM 142-5b	Return spring for accelerator control. Since October 1960.	1
DM 142-30b	Cable for accelerator control, 1.355 mm long (R. VI). Until October 1960.	1
DM 142-30c	Cable for accelerator control, 1.030 mm long (R. VI). Since October 1960.	1
DM 142-65	Flexible thrust sleeve, pedal side (R. VI).	1
DF 142-67	Support for rubber pedal stop (R. VI).	1
DM 142-82	Threaded spindle for accelerator pedal (10 diameter x 150 pitch, length 55 mm).	1

NUMBER	DESCRIPTION	No. OFF
DM 142-85	Bush, nylon, 5 x 7 x 16.4, for spring casing (R. VI).	1
DM 142-102	Washer, felt, under roller securing accelerator control return spring (R. VI). Since October 1960.	1
DM 142-116	Washer, nylon, 5.25 x 9 x 1.2, for spring casing (R. VI).	1
DM 142-151	Compression spring for accelerator control cable, wire diameter 1.5 mm (R. VI).	1
DM 142-154a	Sheath for accelerator control cable (2 x 4.5) (sold by the metre) (R. VI).	1
DM 142-160c	Pedal stop, rubber, 4 x 12 x 14.	1
DM 142-163d	Housing for compression spring and ferrule of accelerator control cable on accelerator pedal (hole for passage of ferrule 6 mm diameter).	1

NUMBER	DESCRIPTION	No. OFF
DM 142-166a	Thrust sleeve (nylon), for cable sheath (carburettor side), 17 mm long (R. VI).	1
DM 142-168	Thrust sleeve (nylon), (pedal side), 30 mm long (R. VI).	1
DM 142-189	Roller securing accelerator control return spring (R. VI). Since October 1960.	1
283-S	Screw, hex. head, 5 x 13, securing accelerator control cable to cam.	1
2.319-S	Nut, hex, 5 diameter x 75 pitch, 5 mm thick, securing accelerator control cable to cam (R. III).	1
2.323-S	Nut, hex., 5 diameter x 75 pitch, 4 mm thick, for securing support for rubber pedal stop (R. III).	2
2.496-S	Nut, hex., 10 diameter x 150 pitch, securing pedal spindle (R. III).	1
2.659	*Screw, hex. head, 5 diameter x 13 long, securing accelerator control cable to cam (R. III). Replaced by 283-S.*	1

The numbers underlined indicate new parts which do not appear on the illustration.

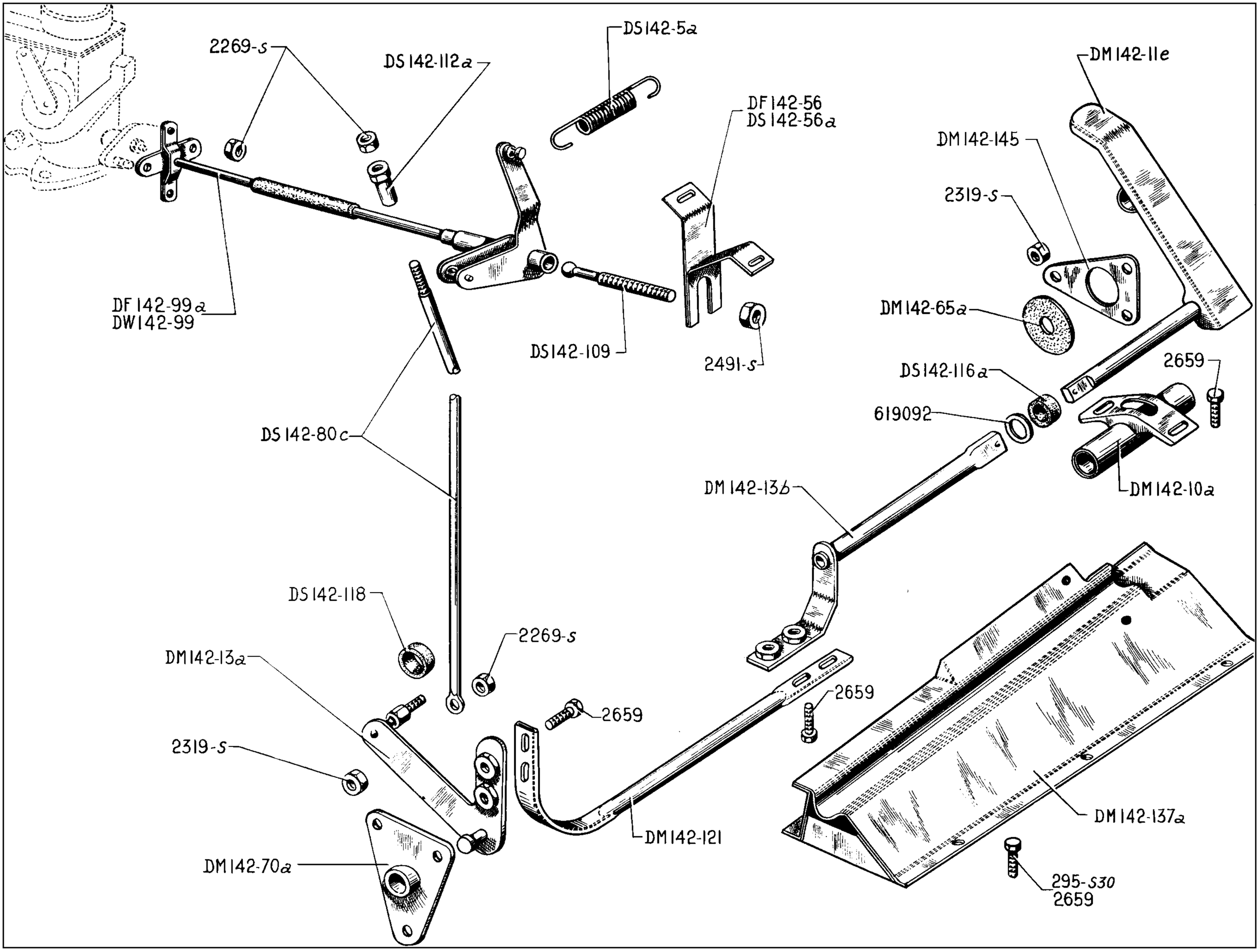
2269-S
DS142-112a
DS142-5a
DM142-11e
DF142-56
DS142-56a
DM142-145
2319-S
DF142-99a
DW142-99
DS142-109
2491-S
DM142-65a
DS142-116a
2659
619092
DS142-80c
DM142-10a
DM142-13b
DS142-118
2269-S
DM142-13a
2659
2659
2319-S
DM142-121
DM142-137a
DM142-70a
295-S30
2659

NUMBER	DESCRIPTION	No. OFF
	Since October 1962	
DS 142-5a	Return spring for accelerator control, 13.5 x 170.	1
DM 142-10a	Articulating bearing for accelerator pedal.	1
DM 142-11e	Accelerator pedal with spindle, height of stop 29 mm (R. VI).	1
DM 142-13a	Bell crank lever, left-hand (R. VI).	1
DM 142-13b	Bell crank lever, right-hand (R. VI).	1
DF 142-56	Accelerator control bracket on dashframe. Until March 1963.	1
DS 142-56a	Accelerator control bracket on dashframe. Since March 1963.	1
DM 142-65a	Rubber sealing washer for right-hand bell crank lever.	1
DM 142-70a	Bearing for bell crank lever, left-hand (R. VI). Until July 1965.	1

NUMBER	DESCRIPTION	No. OFF
DM 142-70c	Bearing for bell crank lever, accelerator control, left-hand, 2 securing holes (R. VI). Since July 1965.	1
DS 142-80c	Control rod, 565 mm long, (4 mm diameter on 50 mm length).	1
DF 142-99a	Intermediate control (between centres on control arm; 50 mm, on return arm 50 mm). Until March 1963.	1
DW 142-99	Intermediate accelerator control rod. Since March 1963.	1
DS 142-109	Ball pin for intermediate control rod, 10 mm diameter, 75 mm long.	1
DS 142-112a	Nut, hex., with collar, 4 diameter x 75 pitch, total length 15 mm, for control rod adjustment.	1
DS 142-116a	Felt washer, anti-rattle, on pedal shaft (9.5 x 17 x 5).	1
DS 142-118	Rubber bush, anti-rattle, for control rod ball joint (11 x 16 x 11).	1
DM 142-121	Coupling rod for bell crank levers (R. VI).	1

NUMBER	DESCRIPTION	No. OFF
DM 142-137a	Support for accelerator control on floor (R. VI).	1
DM 142-145	Seal retaining plate. Until July 1965.	1
DX 142-145	Seal retaining plate, 2 holes 7 mm diameter x 66 mm centres (R. VI). Since July 1965.	1
283-S	Screw, hex. head, 5 x 13, securing:-	
	- control bracket on floor	3
	- articulating bearing for pedal	2
	- coupling rod	4
295-S 30	Screw, hex. head, 5 diameter x 16 long, securing control bracket (R. III).	2
2.269-S	Nut, hex., 4 diameter x 75 pitch (R. III):	
	- for intermediate control on carburettor.	2
	- for control rod.	2
2.319-S	Nut, hex., 5 diameter x 75 pitch, securing bell crank levers (R. III).	6
2.491-S	Nut, hex., 7 diameter x 100 pitch (R. III):	
	- for bracket on dashframe.	2
	- for ball pin.	1
2.659	*Screw, hex. head, 5 diameter x 13 long (R. III):*	
	- for control bracket on floor.	3
	- for pedal articulation bearing.	2
	- for coupling rod.	4
	Replaced by 283-S.	
619.092	Washer, 10.5 x 16 x 1 on pedal shaft (R. I).	1

The numbers underlined indicate new parts which do not appear on the illustration.

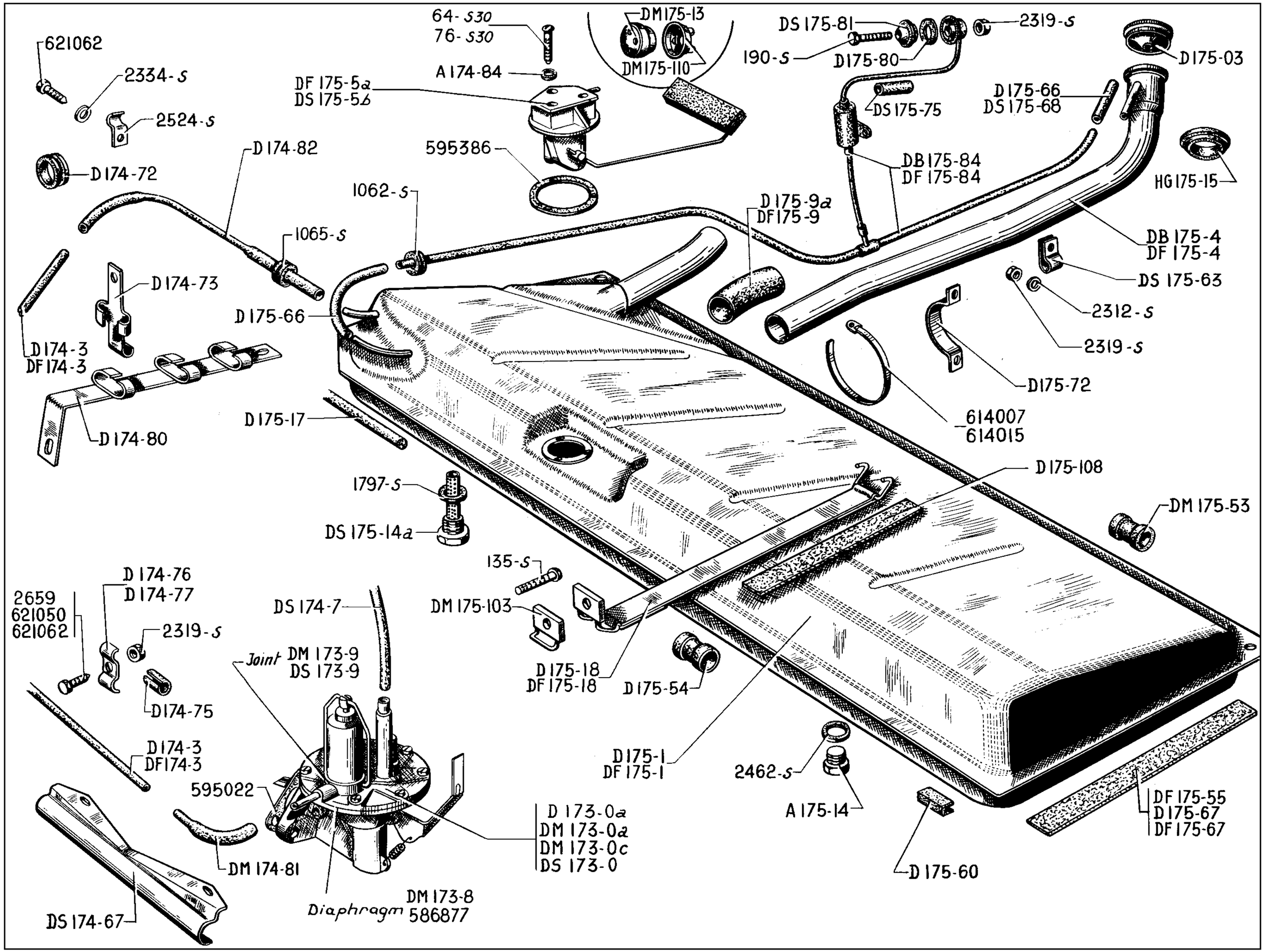
621062
2334-S
2524-S
D174-72
D174-82
1065-S
D174-73
D174-3
DF174-3
D174-80
D175-66
D175-17
64-S30
76-S30
A174-84
DF175-5a
DS175-5b
595386
1062-S
DM175-13
DM175-110
DS175-81
190-S
D175-80
2319-S
D175-03
D175-66
DS175-68
DS175-75
DB175-84
DF175-84
HG175-15
D175-9a
DF175-9
DB175-4
DF175-4
DS175-63
2312-S
2319-S
D175-72
614007
614015
D175-108
DM175-53
1797-S
DS175-14a
135-S
DM175-103
D175-18
DF175-18
D175-54
D175-1
DF175-1
2462-S
A175-14
D175-60
DF175-55
D175-67
DF175-67
D174-76
D174-77
2659
621050
621062
2319-S
D174-75
D174-3
DF174-3
DS174-7
Joint DM173-9
DS173-9
595022
DM174-81
DS174-67
Diaphragm DM173-8
586877
D173-0a
DM173-0a
DM173-0c
DS173-0

NUMBER	DESCRIPTION	No. OFF
A 174-84	Fibre washer, 4.5 x 8 x 0.5, for petrol gauge tank unit (R. VI).	3
A 175-14	Drain plug, 8 diameter x 100 pitch, 7 mm long under head (R. VI). BREAK (SAFARI).	1
HG 175-15	Collar, 34 x 84 x 15 for filler pipe.	
	- BREAK (SAFARI).	1
	- FAMILY TYPE.	2
D 173-0a	Pump complete AC (R. VI). Since March 1963.	1
DM 173-0a	Pump complete AC (R. VI). Until March 1963.	1
DM 173-0c	Pump complete GUIOT (R. VI). Until March 1963.	1
DS 173-0	Pump complete GUIOT (R. VI). Since March 1963.	1
DS 173-2	Filter element RELLUMIX (R. VI).	1
DM 173-8	Diaphragm for AC pump (R. VI).	1
DM 173-9	Joint for AC pump bowl (R. VI).	1
DS 173-9	Joint for GUIOT pump bowl (R. VI).	1
D 174-3	Flexible pipe (nylon) feeding petrol from tank to pump (R. VI). BREAK (SAFARI).	1
DF 174-3	Flexible pipe (nylon) feeding petrol from tank to pump (R. VI). FAMILY TYPE.	1
DS 174-7	Flexible rubber pipe between pump and carburettor, 320 mm long.	1
DS 174-67	Protection plate for flexible feed pipe. Until September 1962.	1
D 174-72	Rubber grommet, 25 x 40 x 11, carrying flexible nylon pipe on centre pillar.	2
D 174-73	Bracket on sidemember for flexible feed pipe.	1

NUMBER	DESCRIPTION	No. OFF
D 174-75	Bush, split rubber, 6 x 10 x 15, protecting flexible petrol feed pipe.	
	- Until September 1962.	10
	- Since September 1962.	13
D 174-76	Double clip with welded screw securing flexible feed pipe. BREAK (SAFARI).	2
D 174-77	Double clip, only, securing flexible feed pipe.	
	- BREAK (SAFARI).	5
	- FAMILY TYPE.	8
D 174-80	Bracket for flexible petrol feed pipe on front pillar.	1
D 174-81	Rubber elbow connecting flexible pipe to petrol pump. Assisted steering. Since April 1963.	1
DM 174-81	Rubber elbow, connecting flexible pipe to petrol pump.	1
D 174-82	Rubber connection, 6 x 15, between flexible pipe and tank, 280 mm long.	1
D 175-03	Filler cap for petrol tank (R. VI).	1
D 175-1	Petrol tank, 65 litres, length 1250 mm (R. VI). BREAK (SAFARI).	1
DF 175-1	Petrol tank, length 710 mm (R. VI). FAMILY TYPE.	1
DB 175-4	Filler pipe, undeveloped length 920 mm (R. VI). BREAK (SAFARI).	1
DF 175-4	Filler pipe, undeveloped length 240 mm (R. VI). FAMILY TYPE.	1
DF 175-5a	Petrol tank gauge unit ED (Veglia) 185 mm long (R. VI). FAMILY TYPE. Until September 1964.	1

NUMBER	DESCRIPTION	No. OFF
DS 175-5b	Petrol tank gauge unit ED (Veglia) 155 mm long (R. VI). BREAK (SAFARI). Until September 1964.	1
DF 175-5c	Petrol tank gauge unit, JAEGER 12 volt (R. VI). FAMILY TYPE. Since September 1964.	1
DM 175-5a	Petrol tank gauge unit, JAEGER 12 volt (R. VI). BREAK. Since September 1964.	1
D 175-9a	Rubber connection, filler pipe to tank, 38 x 47, length 163 mm, BREAK (SAFARI).	1
DF 175-9	Rubber connection, 90 x 38 x 47, filler pipe to tank. FAMILY TYPE.	1
DM 175-13	Filter for air vent pipe (R. VI). EXPORT. Since May 1960.	1
DS 175-14a	Drain plug with filter and washer, reserve side (20 diameter x 150 pitch), 21 mm across flats (R. VI).	1
D 175-17	Packing for petrol tank access trap (R. VI).	3
D 175-18	Strap securing petrol tank, 480 mm long. BREAK (SAFARI).	2
DF 175-18	Strap securing petrol tank, 760 mm long. FAMILY TYPE.	2
DM 175-53	Packing, rubber, transverse, for tank, 47 mm long.	
	- BREAK (SAFARI).	4
	- FAMILY TYPE.	7
D 175-54	Packing, rubber, rear, for tank strap, 50 mm long. BREAK (SAFARI).	2
DF 175-55	Strap, rubber, under tank, 75 x 35 x 2. FAMILY TYPE.	2
D 175-60	Packing piece, rubber, for sound-proofing of tank, 40 mm long (R. VI). BREAK (SAFARI).	6

The numbers underlined indicate new parts which do not appear on the illustration.

NUMBER	DESCRIPTION	No. OFF
DS 175-63	Clip securing air vent pipe (R. VI).	
	- BREAK (SAFARI).	2
	- FAMILY TYPE.	1
D 175-66	Connecting sleeve, rubber, 11 x 18 x 147, for air vent pipe.	2
D 175-67	Rubber strap beneath tank, 380 x 25 x 2. BREAK (SAFARI).	5
DF 175-67	Rubber strap beneath tank, 265 x 60 x 2. FAMILY TYPE.	6
DS 175-68	Connecting sleeve, rubber, 11 x 18 x 70, connecting air vent pipe to filler pipe. FAMILY TYPE.	2
D 175-72	Clip securing filler pipe, 39 mm high, 2 stud holes, 60 mm between centres. BREAK (SAFARI).	1
DS 175-75	Sleeve, rubber, 4 x 8 x 30, protecting air vent pipe.	
	- BREAK (SAFARI).	3
	- FAMILY TYPE.	1
D 175-80	Washer, rubber, 19 x 29 x 3, sealing cup on air vent pipe.	1
DS 175-81	Cup, exterior, for air vent pipe (R. VI).	1
DB 175-84	Air vent pipe (R. VI). BREAK (SAFARI).	1
DF 175-84	Air vent pipe (R. VI). FAMILY TYPE.	1
DM 175-103	Bracket, front, for reservoir strap on body.	2
D 175-108	Packing for protecting tank, 540 mm long x 50 mm wide.	2

NUMBER	DESCRIPTION	No. OFF
DM 175-110	Bracket for air vent pipe filter (R. VI). EXPORT. Since May 1960.	1
64-S 30	Screw, round head, 4 diameter x 12.5 long, securing petrol tank gauge unit and earth wire (R. III).	1
76-S 30	Screw, round head, 4 diameter x 30 long, securing petrol gauge tank unit (R. III).	3
135-S	Screw, round head, 5 diameter x 40 long, securing straps (R. III).	2
190-S	Screw, raised head, countersunk, 5 diameter x 35 long, securing cup of air vent pipe (R. III).	1
1.062-S	Rubber grommet, 12 x 21 x 5, for air supply pipe (R. III).	2
1.065-S	Rubber grommet, 22 x 18 x 8, for flexible feed pipe on body (R. III).	3
1.797-S	Washer, fibre, 20.4 x 30 x 2, for reserve side drain plug (R. VI).	1
2.312-S	Washer, 5.5 x 12 (R. III) for nut securing:	
	- filler pipe clip.	2
	- air vent pipe.	2
2.319-S	Nut, hex., 5 diameter x 75 pitch (R. III) securing:	
	- filler pipe clip.	2
	- air vent pipe.	2
	- screw securing cup on air vent pipe.	1
	- clip with welded on screw.	2
2.334-S	Washer, shakeproof, 5.2 x 9.4, for screw securing clips (R. VI).	7
2.462-S	Washer, fibre, 8.2 x 12 x 1, for drain plug (R. VI). BREAK (SAFARI).	1

NUMBER	DESCRIPTION	No. OFF
2.524-S	Clip, single, securing flexible feed pipe (R. III).	1
2.659	Screw, hex. head, 5 diameter x 13 long, securing double clip on crossmember (R. III). Since September 1962.	3
586.877	Diaphragm for Guiot pump (R. VI).	1
595.022	Joint between pump and cylinder block, 66 mm between hole centres (R. VI).	1
595.386	Washer, rubber, 36 x 55 x 2, (3 holes 4.5 mm diameter) for petrol gauge tank unit (R. VI).	1
614.007	Clip securing connecting sleeve on air supply pipe, 190 mm long (R. VI).	4
614.015	Clip securing connecting sleeve on air supply pipe, 360 mm long (R. VI).	2
621.050	Screw, hex. head, 5 diameter x 20 long, securing double clip on sidemember (R. VI). Since September 1962.	8
621.062	Screw, hex. head, 5 diameter x 14 long (R. III) securing:	
	- clips for flexible pipes. BREAK (SAFARI).	6
	- FAMILY TYPE.	10
	- protecting plate for tube on centre of crossmember. Until September 1962.	2

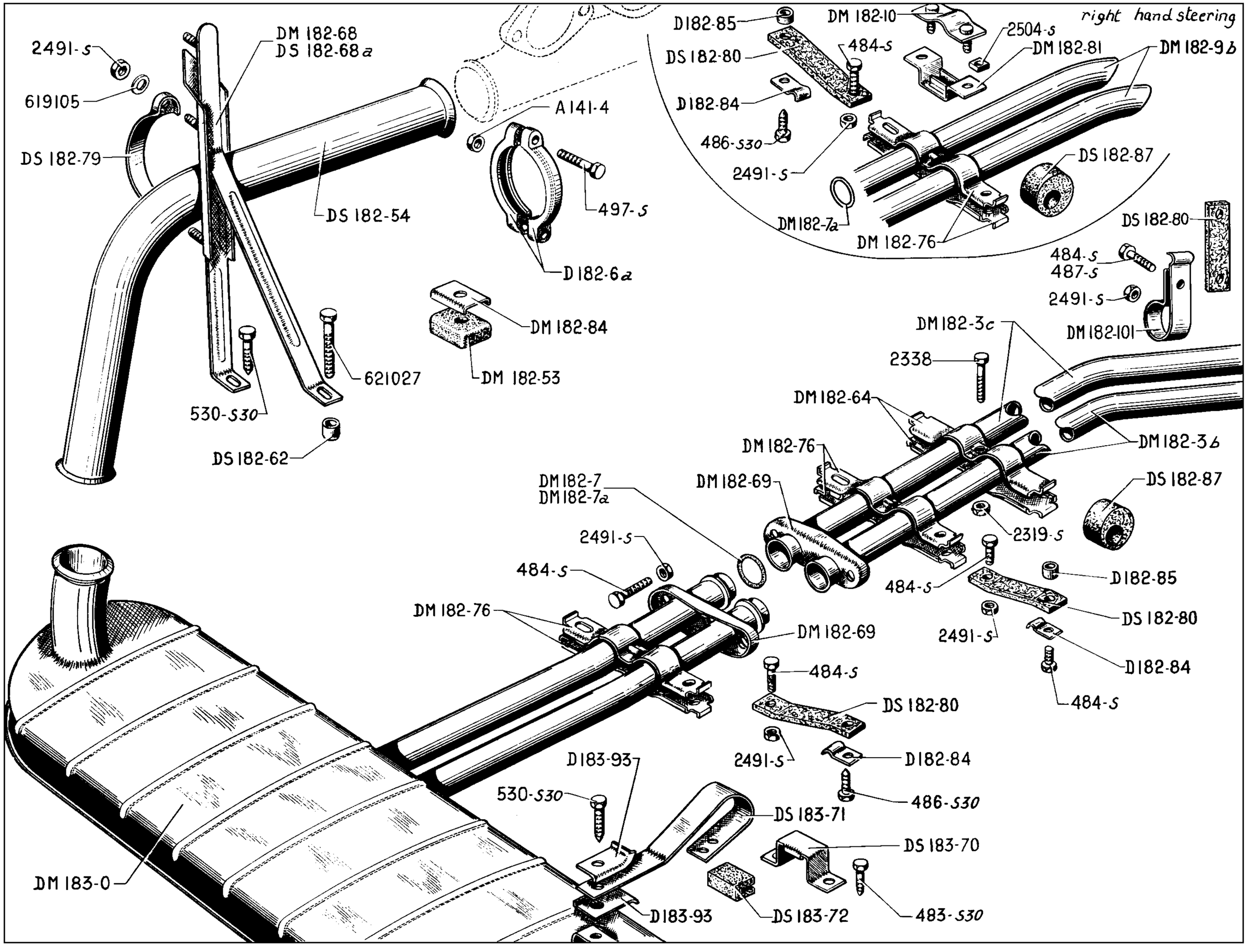
right hand steering
2491-S
619105
DS 182-79
DM 182-68
DS 182-68a
DS 182-54
A141-4
497-S
D182-6a
DM 182-84
DM 182-53
621027
530-S30
DS 182-62
D182-85
DS 182-80
DM 182-10
484-S
2504-S
DM 182-81
DM 182-9b
D182-84
486-S30
2491-S
DS 182-87
DM182-7a
DM 182-76
DS 182-80
484-S
487-S
2491-S
DM 182-101
DM 182-3c
2338
DM 182-64
DM 182-76
DM 182-3b
DM 182-7
DM 182-7a
DM 182-69
DS 182-87
2319-S
2491-S
484-S
D182-85
484-S
DS 182-80
DM 182-76
DM 182-69
2491-S
D182-84
484-S
484-S
DS 182-80
2491-S
D182-84
D183-93
530-S30
486-S30
DS 183-71
DS 183-70
DM 183-0
D183-93
DS 183-72
483-S30

NUMBER	DESCRIPTION	No. OFF
	FRONT	
	All Types Until September 1962	
A 141-4	Nut, hex., 7 diameter x 100 pitch, for securing half clips.	4
D 182-6a	Half clip for front pipe assembly.	4
DM 182-53	Packing piece, rubber, 40 x 25 x 19, under support for front exhaust pipe clip. AMBULANCE.	1
DS 182-54	Pipe, front, without expansion chamber, undeveloped length 623 mm.	1
DS 182-62	Distance piece, 9.5 x 18 x 18, for front pipe bracket clip.	1
DM 182-68	Bracket, with screw for front pipe clip. AMBULANCE.	1
DS 182-68a	Bracket, with welded studs for front pipe clip. BREAK (SAFARI).	1
DM 182-69	Flange for assembling pipes.	2
DS 182-79	Clips securing front pipe to bracket.	1
DM 182-84	Support plate, 40 x 30 x 5, for packing piece under bracket for front pipe clip. AMBULANCE.	1
DM 183-0	Exhaust silencer.	1
DS 183-70	Clamp securing silencer spring support.	1
DS 183-71	Silencer spring support.	1
DS 183-72	Rubber packing, 35 x 23.5 x 17, positioning silencer spring support.	2

NUMBER	DESCRIPTION	No. OFF
D 183-93	Plate, 40 x 27 x 1.8, with 9.5 mm diameter hole, for silencer spring support.	2
483-S 30	Screw, hex. head, 7 diameter x 15 long, securing clamp holding silencer spring support (R. III).	2
497-S	Screw, hex. head, 7 diameter x 50 long, securing half clip of front pipe (R. III).	4
530-S 30	Screw, hex. head, pointed, 9 diameter x 22 long (R. III) securing:	
	- front pipe clip support.	1
	- spring on silencer support plate.	1
2.491-S	Nut, hex., 7 diameter x 100 pitch, securing front pipe clip on support (R. III).	2
619.105	Washer, 7.5 x 14 x 2, for nut securing front pipe clip on support (R. III).	2
621.027	Screw, hex. head, 9 diameter x 50 long, securing support for front pipe clip (R. III).	1
	REAR	
	Left-hand Steering Until September 1962	
DM 182-3b	Exhaust outlet pipe, left-hand (steel) (white paint mark) (R. VI).	1
DM 182-3c	Exhaust outlet pipe, right-hand (steel) (without mark) (R. VI).	1

NUMBER	DESCRIPTION	No. OFF
DM 182-7	Joint, round, 28 x 35 x 3.5, between exhaust pipe and exhaust outlet pipe under body (R. VI). Until May 1960.	2
DM 182-7a	Joint, round, (copper), 28 x 35 x 3.5, between exhaust pipe and exhaust outlet pipe under body (R. VI). Since May 1960.	2
DM 182-64	Half clip, rear, securing exhaust outlet pipes.	
	- Until June 1961.	2
	- Since June 1961.	4
DM 182-76	Half clip for securing exhaust outlet pipes under body.	4
DS 182-80	Strap, rubber, 90 x 30 x 8, securing exhaust outlet pipes under body.	5
D 182-84	Plate, 28 x 28 x 1.5, with 7.5 diameter hole, securing rubber straps for exhaust outlet pipes (R. VI).	4
D 182-85	Distance piece, 8 x 10 x 7, for rubber strap (R. VI).	8
DS 182-87	Thrust block, rubber, protecting exhaust outlet pipes.	6
DM 182-101	Clip, rear, securing exhaust outlet pipe.	2
484-S	Screw, hex. head, 7 diameter x 17.5 long (R. III) assembling:	
	- flange for exhaust outlet pipes.	2
	- half clips, front and centre, for exhaust outlet pipes.	4
	- rubber strap, rear clip bracket.	1
486-S 30	Screw, hex. head, pointed, 7 diameter x 22.5 long, securing rubber straps for exhaust outlet pipes under body (R. III).	4
487-S	Screw, hex. head, 7 diameter x 25 long, securing rear clips of exhaust outlet pipes (R. III).	1

NUMBER	DESCRIPTION	No. OFF
2.319-S	Nut, hex., 5 diameter x 75 pitch, for screw securing rear half clips of exhaust outlet pipes (R. III).	1
2.338	Screw, hex. head, 5 diameter x 20 long, securing rear half clip on exhaust outlet pipes (R. III).	
	- Until June 1961.	1
	- Since June 1961.	2
2.491-S	Nut, hex., 7 diameter x 100 pitch, (R. III) securing:	
	- rubber strap on front, centre and rear half clip.	6
	- flange for exhaust outlet pipes.	2
	REAR	
	Right-hand Steering Until September 1962	
DM 182-7a	Joint, round, (copper) 28 x 35 x 3.5 between exhaust pipe and exhaust outlet pipe under body (R. VI).	2

NUMBER	DESCRIPTION	No. OFF
DM 182-9b	Outlet pipes right and left-hand.	2
DM 182-10	Clip with screw securing rear of exhaust outlet pipes.	2
DM 182-76	Half clip securing exhaust outlet pipes under body.	6
DS 182-80	Strap, rubber, 90 x 30 x 8, securing exhaust outlet pipes under body.	6
DM 182-81	Bracket, securing rear of outlet pipe.	2
D 182-84	Plate, 28 x 28 x 1.5, with 7.5 mm diameter hole, securing rubber strap for exhaust outlet pipes.	6

NUMBER	DESCRIPTION	No. OFF
D 182-85	Distance piece, 8 x 10 x 7, for rubber strap (R. VI).	12
DS 182-87	Thrust block, rubber, protecting exhaust outlet pipes.	6
484-S	Screw, hex. head, 7 diameter x 17.5 long, assembling half clips (R. III).	6
486-S 30	Screw, hex. head, pointed, 7 diameter x 22.5 long, securing rubber straps on body (R. III).	6
2.491-S	Nut, hex., 7 diameter x 100 pitch (R. III):	
	- for flange of exhaust outlet pipes.	2
	- for rubber strap on half clip.	6
2.504-S	Nut, square, 7 diameter x 100 pitch, for screws securing rear of exhaust outlet pipes (R. III).	2

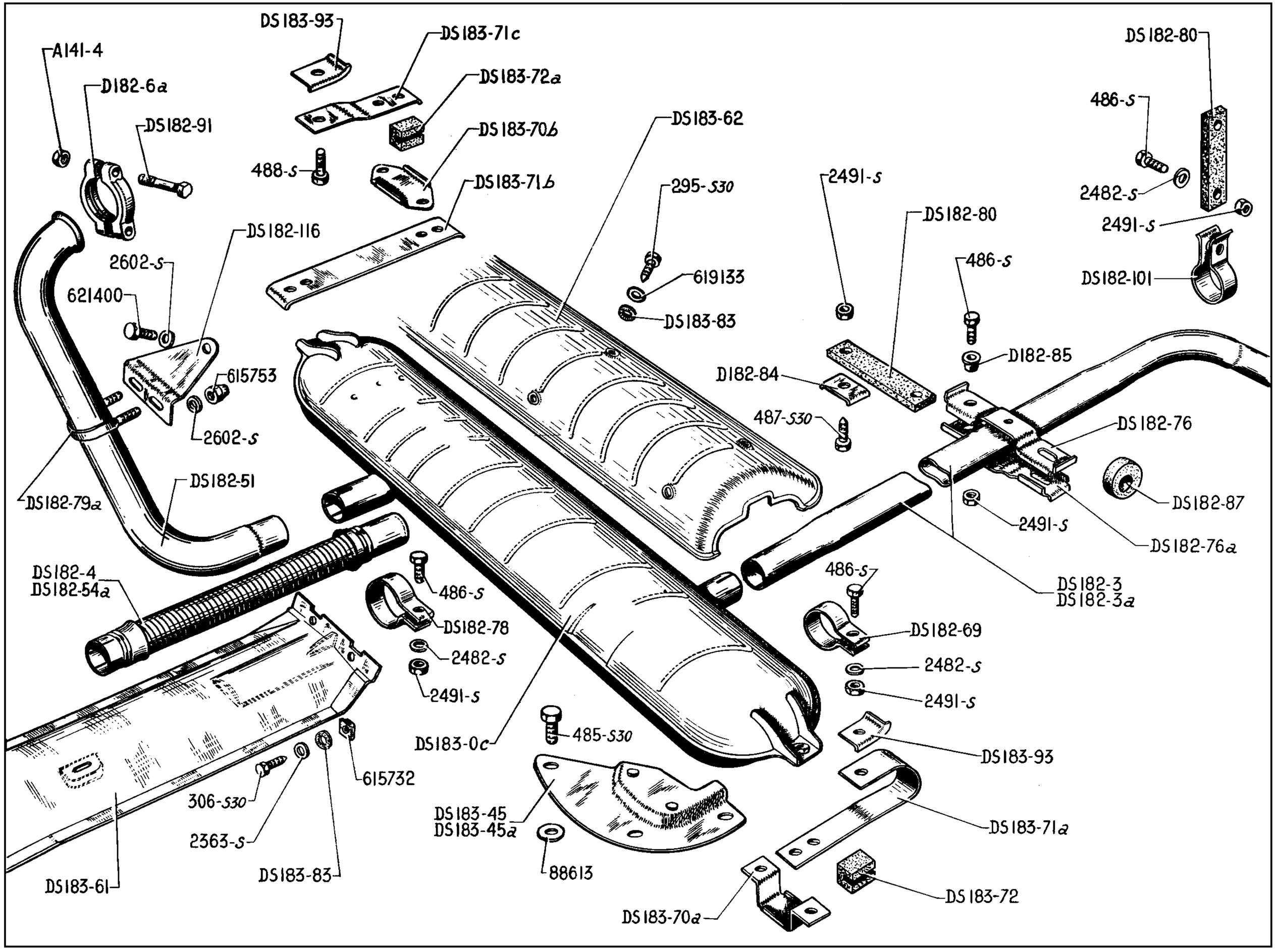
DS183-93
DS183-71c
A141-4
DS182-80
D182-6a
DS183-72a
486-S
DS182-91
DS183-62
DS183-70b
488-S
DS183-71b
295-S30
2491-S
2482-S
DS182-80
2491-S
DS182-116
486-S
2602-S
619133
DS182-101
621400
DS183-83
D182-85
615753
D182-84
487-S30
DS182-76
2602-S
DS182-51
DS182-87
DS182-79a
2491-S
DS182-76a
DS182-4
DS182-54a
486-S
DS182-3
DS182-3a
486-S
DS182-78
DS182-69
2482-S
2482-S
2491-S
2491-S
DS183-0c
485-S30
DS183-93
615732
306-S30
DS183-45
DS183-45a
DS183-71a
2363-S
88613
DS183-61
DS183-83
DS183-72
DS183-70a

NUMBER	DESCRIPTION	No. OFF
	Since September 1962	
A 141-4	Nut, hex., 7 x 100, securing half clips.	2
DS 182-3	Exhaust outlet pipe under body (R. VI). L.H. steering.	1
DS 182-3a	Exhaust outlet pipe under body (R. VI). R.H. steering.	1
DS 182-4	Intermediate exhaust pipe (R. VI). Since January 1963.	1
D 182-6a	Half clip assembling connecting pipe on front pipe.	2
DS 182-51	Front exhaust pipe.	1
DS 182-54a	*Connecting pipe between front pipe and silencer (R. VI). Until January 1963. Replaced by DS 182-4.*	1
DS 182-69	Clip securing outlet pipe under body (front part).	1
DS 182-76	Half clip, upper, securing exhaust outlet pipe under body.	
	L.H. steering.	1
	R.H. steering.	2
DS 182-76a	Half clip, lower, securing exhaust outlet pipe under body.	
	L.H. steering.	1
	R.H. steering.	2
DS 182-78	Clip for assembling connecting pipe on front pipe and silencer.	2

NUMBER	DESCRIPTION	No. OFF
DS 182-79a	Clip securing connecting pipe.	1
DS 182-80	Strap, rubber, 90 x 30 x 8 for exhaust outlet pipe under body, 2 holes 10.2 mm diameter at 62 mm between centres.	
	L.H. steering.	3
	R.H. steering.	4
D 182-84	Plate, 28 x 28 x 1.5, 1 hole 7.5 for securing rubber strap (R. VI).	2
D 182-85	Distance piece, 10 x 8 x 7, for rubber strap (R. VI).	
	L.H. steering.	6
	R.H. steering.	8
DS 182-87	Thrust block, rubber, protecting exhaust outlet pipe.	
	L.H. steering.	2
	R.H. steering.	4
DS 182-91	Screw, round head (2 flats) for half-clips assembling connecting pipe on front pipe.	2
DS 182-101	Clip securing outlet pipe under body (rear part). L.H. steering.	1
DS 182-116	Plate securing front exhaust pipe.	1
DS 182-124	Shield for gusset on engine housing, right-hand.	1
DS 182-125	Fibre insulating washer for gusset shield on engine housing (R. VI).	5
DS 183-0c	Exhaust silencer.	1
DS 183-45	Support clamp securing silencer support spring, left-hand.	1
DS 183-45a	Support clamp securing silencer support spring, right-hand.	1

NUMBER	DESCRIPTION	No. OFF
DS 183-61	*Shield for connecting pipe. Replaced by DX 183-61.*	1
DS 183-62	*Exhaust silencer shield. Replaced by DX 183-62.*	1
DS 183-70a	Clamp securing silencer support spring.	
	- Until October 1962.	2
	- Since October 1962.	4
DS 183-70b	Intermediate plate between upper and lower spring clamps. Since October 1962.	2
DS 183-71a	Silencer spring support.	
	- Until October 1962.	2
	- L.H. Since October 1962.	1
DS 183-71b	Spring, lower, right-hand, for silencer suspension. Since October 1962.	1
DS 183-71c	Spring, upper, right-hand, for silencer suspension. Since October 1962.	1
DS 183-72	Rubber packing, slotted, 35 x 23.5 x 17 retaining silencer support springs.	
	- Until October 1962.	4
	- L.H. Since October 1962.	2
	- for lower spring, R.H. Since October 1962.	4
DS 183-72a	Rubber packing, slotted, 35 x 23.5 x 17 retaining upper right-hand silencer support spring (white paint mark). Since October 1962.	2
DS 183-83	Washer, (fibre), for screws securing shields, 24 x 8.2 x 2 (R. VI).	8
DS 183-93	Plate, 40 x 27 x 1.8 with 1 hole 7.5 mm diameter for tightening silencer spring support.	4
295-S 30	Screw, hex. head, pointed, 5 x 16, for securing shields (R. III).	8

The numbers underlined indicate new parts which do not appear on the illustration.

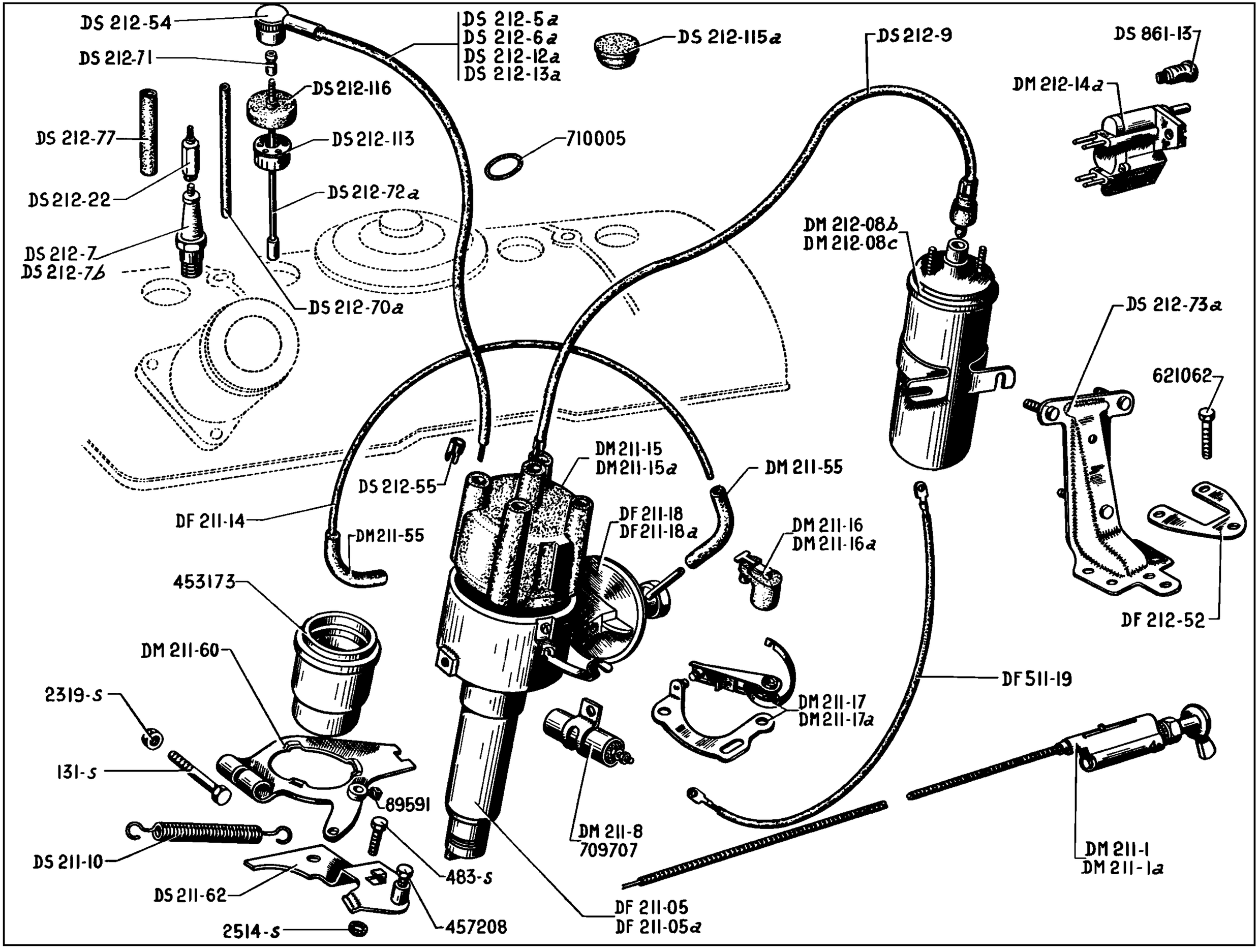
DS 212-54
DS 212-71
DS 212-116
DS 212-113
DS 212-77
DS 212-22
DS 212-7
DS 212-7b
DS 212-72a
DS 212-70a
DS 212-5a
DS 212-6a
DS 212-12a
DS 212-13a
DS 212-115a
710005
DS 212-9
DS 861-13
DM 212-14a
DM 212-08b
DM 212-08c
DS 212-73a
621062
DS 212-55
DM 211-15
DM 211-15a
DM 211-55
DF 211-14
DM 211-55
DF 211-18
DF 211-18a
DM 211-16
DM 211-16a
DF 212-52
453173
DM 211-60
2319-s
DM 211-17
DM 211-17a
DF 511-19
131-s
89591
DM 211-8
709707
DS 211-10
483-s
DS 211-62
DM 211-1
DM 211-1a
2514-s
457208
DF 211-05
DF 211-05a

NUMBER	DESCRIPTION	No. OFF
	Until April 1962	
DF 211-05	*Distributor, DUCELLIER complete (R. VI). Replaced by DF 211-05b.*	1
DF 211-05a	*Distributor, SEV complete (R. VI). Replaced by DF 211-05c.*	1
DM 211-1	Ignition control, 440 mm long (R. VI). Until September 1960.	1
DM 211-1a	Ignition control, 440 mm long (R. VI). Since September 1960.	1
DM 211-8	Condenser, DUCELLIER (R. VI).	1
DS 211-10	Return spring for distributor, external diameter 9 mm, 70 mm long.	1
DF 211-14	Suction pipe, 3 x 4, (Rilsan), 300 mm long (R. VI).	1
DM 211-15	Distributor head, DUCELLIER (R. VI).	1
DM 211-15a	Distributor head, SEV (R. VI).	1
DM 211-16	Rotor, DUCELLIER (R. VI).	1
DM 211-16a	Rotor, SEV (R. VI).	1
DM 211-17	Contact points, complete DUCELLIER (R. VI).	1
DM 211-17a	Arm with contact point SEV (R. VI).	1
DF 211-18	Suction unit, DUCELLIER (R. VI).	1
DF 211-18a	Suction unit, SEV (R. VI).	1
DM 211-55	Connecting rubber for suction pipe.	2
DM 211-60	Lever for distributor.	1
DS 211-62	Bracket with trunnion, securing distributor.	1
DM 212-08b	Ignition coil, 12 volts, DUCELLIER (R. VI).	1

NUMBER	DESCRIPTION	No. OFF
DM 212-08c	Ignition coil, 12 volts, SEV (R. VI).	1
DS 212-5a	Sparking plug lead, distributor to number 1 cylinder, 460 mm long.	1
DS 212-6a	Sparking plug lead, distributor to number 2 cylinder, 400 mm long.	1
DS 212-7	Sparking plug, Marchal, 14 mm (35B) (R. VI).	4
DS 212-7b	Sparking plug, AC 14 mm (44F) (R. VI).	4
DS 212-9	Lead, distributor to coil, 405 mm long.	1
DS 212-12a	Sparking plug lead, distributor to number 3 cylinder, 290 mm long.	1
DS 212-13a	Sparking plug lead, distributor to number 4 cylinder, 405 mm long.	1
DM 212-14a	Ignition switch and starter motor control without lock barrel (R. VI).	1
DS 212-22	*End piece for sparking plug (R. VI). Replaced by DS 212-22a.*	4
DS 212-22a	End piece for sparking plug (R. VI).	4
DF 212-52	Reinforcing plate for coil bracket.	1
DS 212-54	End piece for sparking plug lead (R. VI).	4
DS 212-55	End piece for sparking plug lead (R. VI).	5
DS 212-70a	Insulating sleeve for sparking plug connecting rod, 84 mm long (R. VI).	4
DS 212-71	End piece, upper, on sparking plug connecting rod (R. VI).	4
DS 212-72a	Connecting rod for sparking plug, 110 mm long (threaded 4 diameter x 75 pitch) (R. VI).	4

NUMBER	DESCRIPTION	No. OFF
DS 212-73a	Support for coil.	1
DS 212-77	Protector, 9 x 12 x 70, for sparking plug connection (R. VI).	4
DS 212-113	Plug for sparking plug tube (R. VI).	4
DS 212-115a	Plug, rubber, for 40 mm diameter hole in scuttle for sparking plug spanner.	1
DS 212-116	Cap, rubber, for sparking plug tube, internal diameter 41 mm.	4
DF 511-19	Lead, distributor to coil, length 450 mm.	1
DS 861-13	Set of 4 lock barrels (5 wards), for igniton switch and doors (R. VI).	1
131-S	Screw, round head, 5 diameter x 30 long, securing distributor control lever (R. III).	1
483-S	Screw, hex. head, 7 diameter x 15 long, securing bracket and control lever (R. III).	2
2.319-S	Nut, hex., 5 diameter x 75 pitch, for screw securing distributor control lever (R. III).	1
2.514-S	Washer, shakeproof, 7.3 x 12, for screw securing bracket and control lever (R. VI).	1
89.591	Screw, square head, 4 diameter x 8 long, securing cable (R. III).	1
453.173	Housing for distributor (R. III).	1
457.208	Screw, hex. head, slotted, 5 diameter x 7.5 long, securing sheath of ignition control (R. III).	1
621.062	Screw, hex. head, 5 diameter x 14 long, securing coil bracket (R. III).	2
709.707	Condenser, SEV (R. VI).	1
710.005	Ring, rubber, holding sparking plug leads (R. III).	1

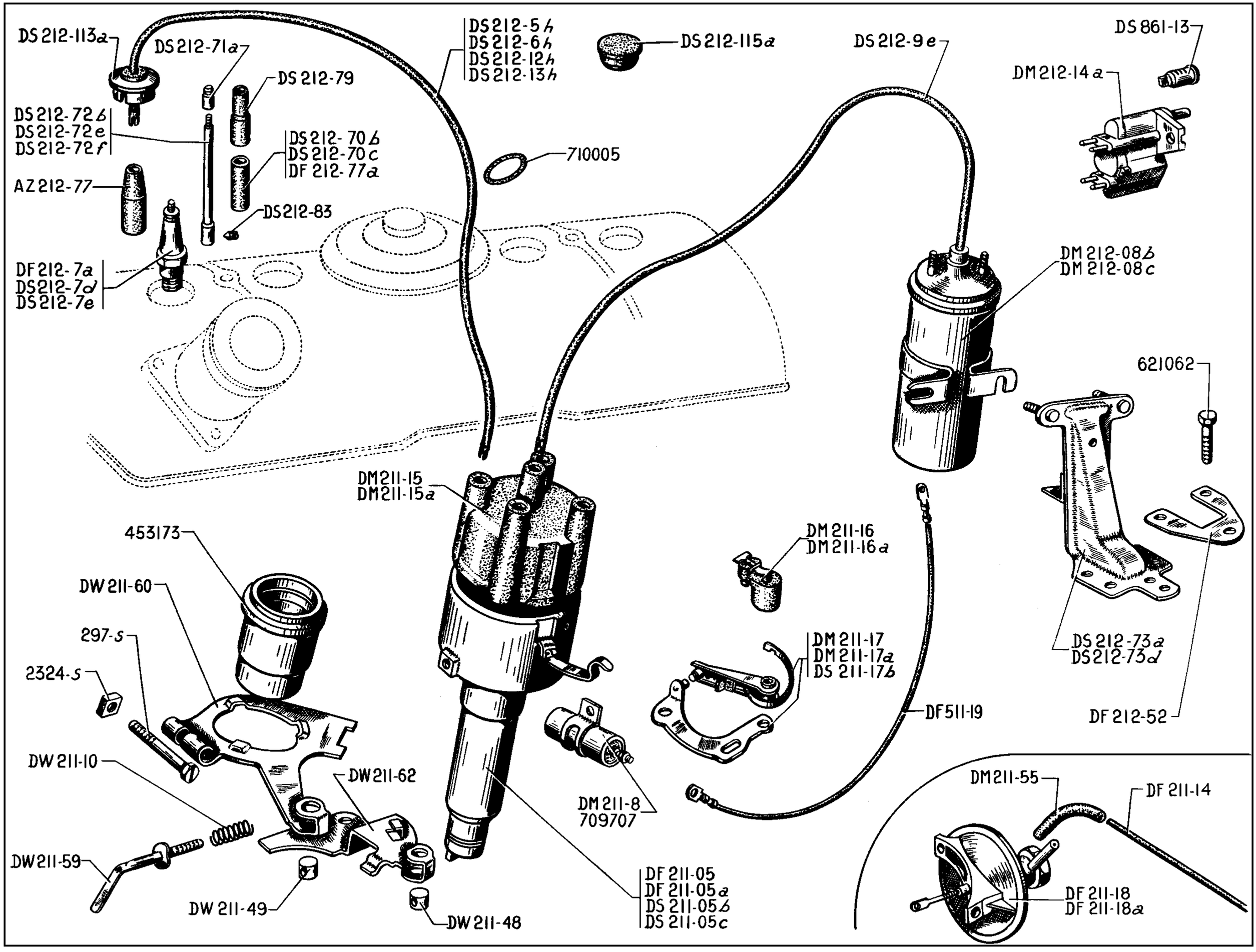
DS 212-113a
DS 212-71a
DS 212-79
DS 212-72b
DS 212-72e
DS 212-72f
DS 212-70b
DS 212-70c
DF 212-77a
AZ 212-77
DS 212-83
DF 212-7a
DS 212-7d
DS 212-7e
DS 212-5h
DS 212-6h
DS 212-12h
DS 212-13h
DS 212-115a
710005
DS 212-9e
DS 861-13
DM 212-14a
DM 212-08b
DM 212-08c
621062
DS 212-73a
DS 212-73d
DF 212-52
DM 211-15
DM 211-15a
453173
DW 211-60
297-s
2324-s
DW 211-10
DW 211-62
DW 211-59
DW 211-49
DW 211-48
DM 211-16
DM 211-16a
DM 211-17
DM 211-17a
DS 211-17b
DF 511-19
DM 211-8
709707
DF 211-05
DF 211-05a
DS 211-05b
DS 211-05c
DM 211-55
DF 211-14
DF 211-18
DF 211-18a

NUMBER	DESCRIPTION	No. OFF
	Since April 1962	
AZ 212-77	Protector for sparking plug (R. VI).	4
HY 211-59	Rod for adjusting distributor, threaded 4 diameter x 75 pitch (R. VI).	1
DF 211-05	*Distributor, Ducellier (R. VI). Until March 1963. Replaced by DF 211-05b.*	1
DF 211-05a	*Distributor, SEV (R. VI). Until March 1963. Replaced by DF 211-05c.*	1
DF 211-05b	Distributor, Ducellier (R. VI). Until March 1963.	1
DF 211-05c	Distributor, SEV (R. VI). Until March 1963.	1
DS 211-05b	Distributor, Ducellier without suction unit (R. VI). Since March 1963.	1
DS 211-05c	Distributor, SEV without suction unit (R. VI). Since March 1963.	1
DM 211-8	Condenser, Ducellier (R. VI).	1
DW 211-10	Return spring for distributor, 8 mm diameter, length 27.6 mm (R. VI).	1
DF 211-14	Suction pipe, 3 x 4 (Rilsan), 300 mm long (R. VI). Until March 1963.	1
DM 211-15	Distributor head, Ducellier (R. VI).	1
DM 211-15a	Distributor head, SEV (R. VI).	1
DM 211-16	Rotor, Ducellier (R. VI).	1
DM 211-16a	Rotor, SEV (R. VI).	1
DM 211-17	Contact points, complete Ducellier (R. VI). Until March 1963.	1
DM 211-17a	Arm with contact point SEV (R. VI).	1

NUMBER	DESCRIPTION	No. OFF
DS 211-17b	Contact points, complete Ducellier (R. VI). Since March 1963.	1
DF 211-18	Suction unit, Ducellier (R. VI). Until March 1963.	1
DF 211-18a	Suction unit, SEV (R. VI). Until March 1963.	1
DW 211-48	Trunnion for ignition control, hole tapped 5 diameter x 75 pitch (R. VI).	1
DW 211-49	Trunnion for distributor control lever, plain hole 5.25 mm diameter (R. VI).	1
DM 211-55	Rubber union for suction pipe. Until March 1963.	2
DW 211-59	*Rod with distributor adjusting washer, threaded 5 diameter x 75 pitch (R. VI). Replaced by HY 211-59.*	1
DW 211-60	Lever for distributor (R. VI).	1
DW 211-62	Plate securing housing without trunnion (R. VI).	1
DS 212-04e	Harness with plug lead and lead from distributor to coil (R. VI).	1
DM 212-08b	Coil, 12 volts, Ducellier (R. VI).	1
DM 212-08c	Coil, 12 volts, SEV (R. VI). Except U.S.A.	1
DS 212-5h	Sparking plug lead, distributor to number 1 cylinder, 520 mm long (R. VI).	1
DS 212-6h	Sparking plug lead, distributor to number 2 cylinder, 470 mm long (R. VI).	1
DF 212-7a	Sparking plug, Champion, 14 mm (L 10) (R. VI). U.S.A. Since February 1963.	4

NUMBER	DESCRIPTION	No. OFF
DS 212-7d	Sparking plug, Marchal, 14 mm diameter, end piece threaded 4 diameter x 70 pitch (R. VI).	4
DS 212-7e	Sparking plug, A.C. 14 mm diameter, end piece threaded 4 diameter x 70 pitch (43 F) (R. VI). Until March 1963.	4
DS 212-9e	Lead, distributor to coil, 405 mm long (R. VI).	1
DS 212-12h	Sparking plug lead, distributor to number 3 cylinder, 370 mm long (R. VI).	1
DS 212-13h	Sparking plug lead, distributor to number 4 cylinder, 370 mm long (R. VI).	1
DM 212-14a	Ignition switch and starter motor control without lock barrel (R. VI). Until September 1964.	1
DW 212-14c	Ignition switch without lock barrel (R. VI). Since September 1964.	1
DF 212-52	Reinforcing plate for coil support.	1
DS 212-70b	Insulating sleeve, 4.5 x 7 x 57, for sparking plug connecting rod (R. VI). Until March 1963.	4
DS 212-70c	Insulating sleeve, 4.5 x 7 x 47, for sparking plug connecting rod (R. VI) U.S.A. Since February 1963. All Types. Since March 1963.	4
DS 212-71a	End piece for sparking plug connecting rod, threaded 4 diameter x 70 pitch (R. VI).	4
DS 212-72b	Sparking plug connecting rod only, 82 mm long, threaded 4 diameter x 70 pitch (R. VI). Until March 1963.	4
DS 212-72e	Sparking plug connecting rod only, 72 mm long, threaded 4 diameter x 70 pitch (R. VI). Except U.S.A. Since March 1963.	4

The numbers underlined indicate new parts which do not appear on the illustration.

NUMBER	DESCRIPTION	No. OFF
DS 212-72f	Sparking plug connecting rod only, 72.5 mm long, threaded 4 diameter x 70 pitch, hole tapped 3 diameter x 60 pitch, for screw securing on sparking plug (R. VI). U.S.A. Since February 1963.	4
DS 212-73a	Support for coil. Until September 1962.	1
DS 212-73d	Support for coil with welded angle supporting coil. Since September 1962.	1
DF 212-77a	*Protector (cardboard), 13 x 15 x 55, for sparking plug connecting rod (R. VI). U.S.A. Since February 1963. Replaced by DS 212-77a.*	4
DS 212-77a	Protector (cardboard), 13 x 15 x 87, for sparking plug connecting rod (R. VI). Since March 1963.	4

NUMBER	DESCRIPTION	No. OFF
DS 212-79	Protector 6.2 x 7.2 x 39, for connecting rod and sparking plug lead (R. VI). All Types. U.S.A. Until February 1963.	4
DS 212-83	Screw, 3 diameter x 60 long, securing sparking plug connecting rod (R. VI). U.S.A. Since February 1963.	4
DS 212-113a	Plug for sparking plug tube (R. VI).	4
DS 212-115a	Plug, rubber, for 40 mm hole in scuttle for sparking plug spanner.	1
DF 511-19	Lead, distributor to coil, 450 mm long.	1

NUMBER	DESCRIPTION	No. OFF
DS 861-13	*Set of 4 lock barrels for ignition switch and doors (R. VI). Replaced by DS 861-13b.*	1
DS 861-43	Lock barrel for ignition switch (R. VI).	1
297-S	Screw, hex. head, slotted, 5 diameter x 35 long, securing distributor lever (R. III).	1
2.324-S	Nut, square, 5 diameter x 75 pitch, securing screw of distributor lever (R. III).	1
453.173	Distributor housing (R. VI).	1
621.062	Screw, hex. head, 5 diameter x 14 long, securing coil support (R. III).	2
709.707	Condenser, SEV (R. VI).	1
710.005	Ring, rubber, holding sparking plug leads (R. III).	1

The numbers underlined indicate new parts which do not appear in the illustration.

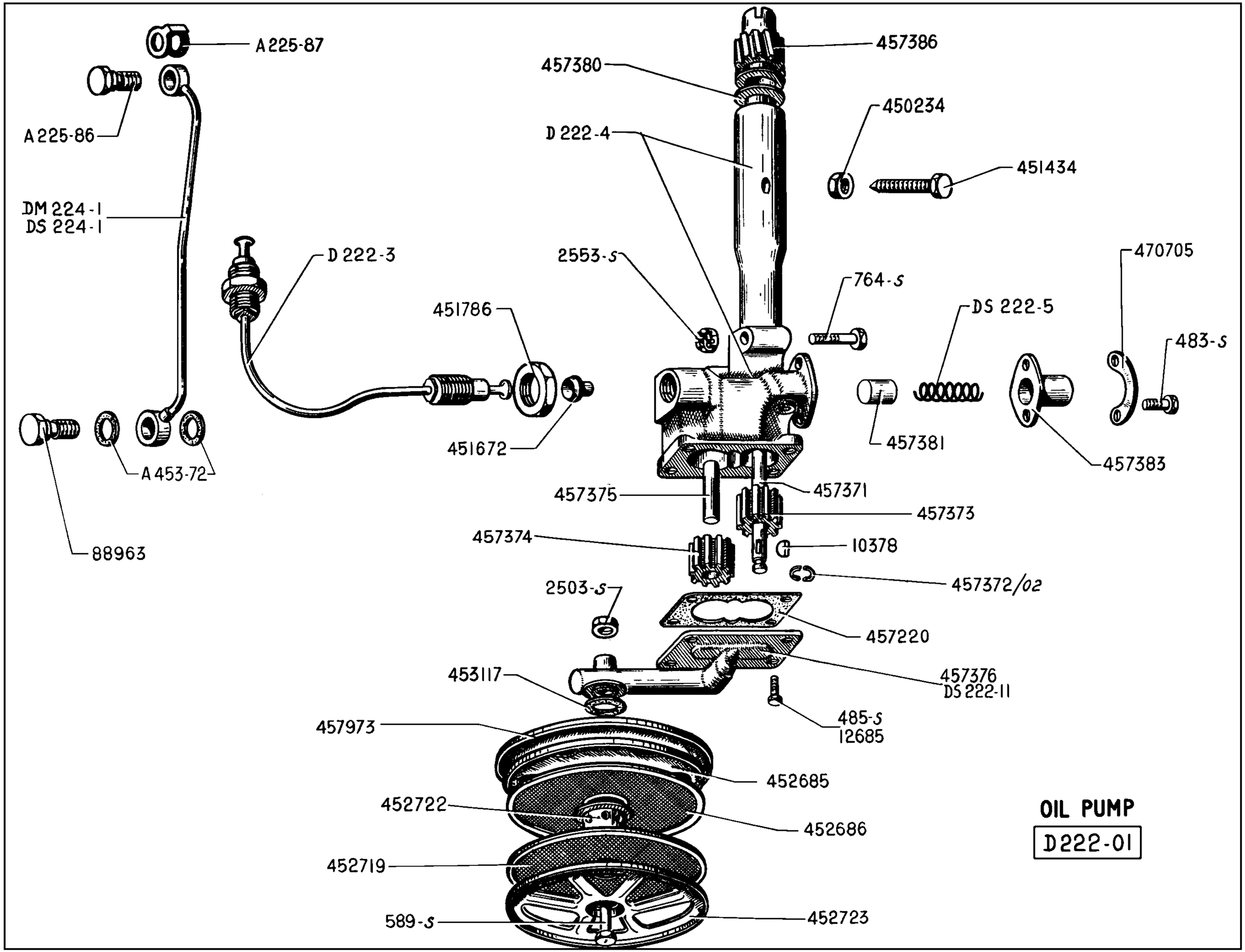
A 225-87
A 225-86
DM 224-1
DS 224-1
D 222-3
451786
451672
A 453-72
88963
457386
457380
450234
D 222-4
451434
2553-S
764-S
470705
DS 222-5
483-S
457381
457383
457375
457371
457373
457374
10378
457372/02
2503-S
457220
453117
457376
DS 222-11
485-S
12685
457973
452685
452722
452686
452719
589-S
452723
OIL PUMP
D 222-01

NUMBER	DESCRIPTION	No. OFF
A 225-86	Union screw, hex. head, 7 diameter x 18 long (1 mm hole), securing valve rocker lubrication pipe to cylinder head.	1
A 225-87	Joint, double, 7.2 mm diameter for union screw on cylinder head (R. VI).	1
A 453-72	Joint, copper, 10.2 x 18 x 1.5, for valve rocker lubrication pipe.	2
D 222-01	Oil pump, complete with filters.	1
D 222-3	Oil pipe, between pump and cylinder block.	1
D 222-4	Pump body with support.	1
DS 222-5	Spring for non-return valve.	1
DS 222-11	Oil pump base, forming support for filters (4 cylindrical holes). Since June 1960.	1
DM 224-1	Rocker lubrication pipe, 190 mm between centres. Until March 1963.	1
DS 224-1	Rocker lubrication pipe, 190 mm between centres. Since March 1963.	1
483-S	Screw, hex. head, 7 diameter x 15 long, securing piston spring housing (R. III).	2
485-S	Screw, hex. head, 7 diameter x 20 long, securing pump base on pump body (R. III). Until June 1960. Since June 1960.	3 4

NUMBER	DESCRIPTION	No. OFF
589-S	*Screw, hex. head, 7 diameter x 60 long, securing filters on pump (R. III). Replaced by 621.092 (R. I).*	1
764-S	Screw, hex. head, 8 diameter x 42.5 long, securing tubular support to pump body (R. III).	1
2.503-S	Nut, hex., 7 diameter x 100 pitch (6 mm thick), securing filters on pump base (R. III).	1
2.553-S	Nut, hex., castellated, 8 diameter x 125 pitch, for screws securing tubular pump support (R. III).	1
10.378	Woodruff key, for fixed pinion (2.5 mm thick) (R. I).	1
12.685	Screw, slotted head, 7 diameter x 15 long, securing pump base on body of pump (R. I). Until June 1960.	1
88.963	Union screw, hex. head, 10 diameter x 18 long, securing valve rocker lubrication pipe to cylinder block (R. I).	1
450.234	Locknut, hex., 10 diameter x 100 pitch (4 mm thick), for screw 451.434, securing tubular support to pump (R. I).	1
451.434	Screw, hex. head, pointed, 10 diameter x 30 long, securing tubular support to pump (R. I).	1
451.672	Conical union for oil circulation on pump and cylinder block (R. I).	2
451.786	Locknut, hex., 20 diameter x 150 pitch, securing pipe between pump and cylinder block (R. I).	2
452.685	Cover, upper, for pump filters (6 holes 30 mm diameter) (R. I).	1
452.686	Upper filter for pump, (centre hole 30 mm diameter) (R. I).	1
452.719	Lower filter, (centre hole 11 mm diameter) (R. I).	1
452.722	Distance piece for filters (R. I).	1

NUMBER	DESCRIPTION	No. OFF
452.723	Lower plate for pump filters (6 triangular holes) (R. I).	1
453.117	Gasket, 29 x 42, between bottom of pump and upper housing shielding filter cover (R. VI).	1
457.220	Gasket for base of pump, 0.05 mm thick (R. VI).	1
457.371	Spindle for fixed pinion, 288.5 mm long.	1
457.372/02	Retaining cotter for fixed pinion, 7 mm thick (2 parts) (R. I).	1
457.373	Fixed pinion, straight teeth (10 teeth, 24.9 mm high) (R. I).	1
457.374	Idler pinion, straight teeth (10 teeth, 24.9 mm high) (R. I).	1
457.375	Shaft for idler pinion, 44 mm long (R. I).	1
457.376	*Pump base, forming filter support (no seating for spindles) (R. I). Until June 1960. Replaced by DS 222-11; order in addition: 1-457.973 (R. I), 1-485-S (R. III).*	1
457.380	Bush for tubular support, 12.5 x 24 x 28 x 37 (R. I).	1
457.381	Piston for return valve, 12 mm diameter x 20 mm long (R. I).	1
457.383	Housing for piston spring (R. I).	1
457.386	Pinion driving pump and distributor, 10 teeth, left-hand pitch, total height 45.2 mm (R. I).	1
457.973	Upper casing, protecting filters. Since June 1960. Replaces early types.	1
470.705	Lockwasher, double, 7.5 mm holes (distance between centres 32 mm) for screws securing spring housing (R. I).	1
621.092	Screw, hex. head, for securing filters on pump (R. I). Since May 1963.	1

The numbers underlined indicate new parts which do not appear in the illustration.

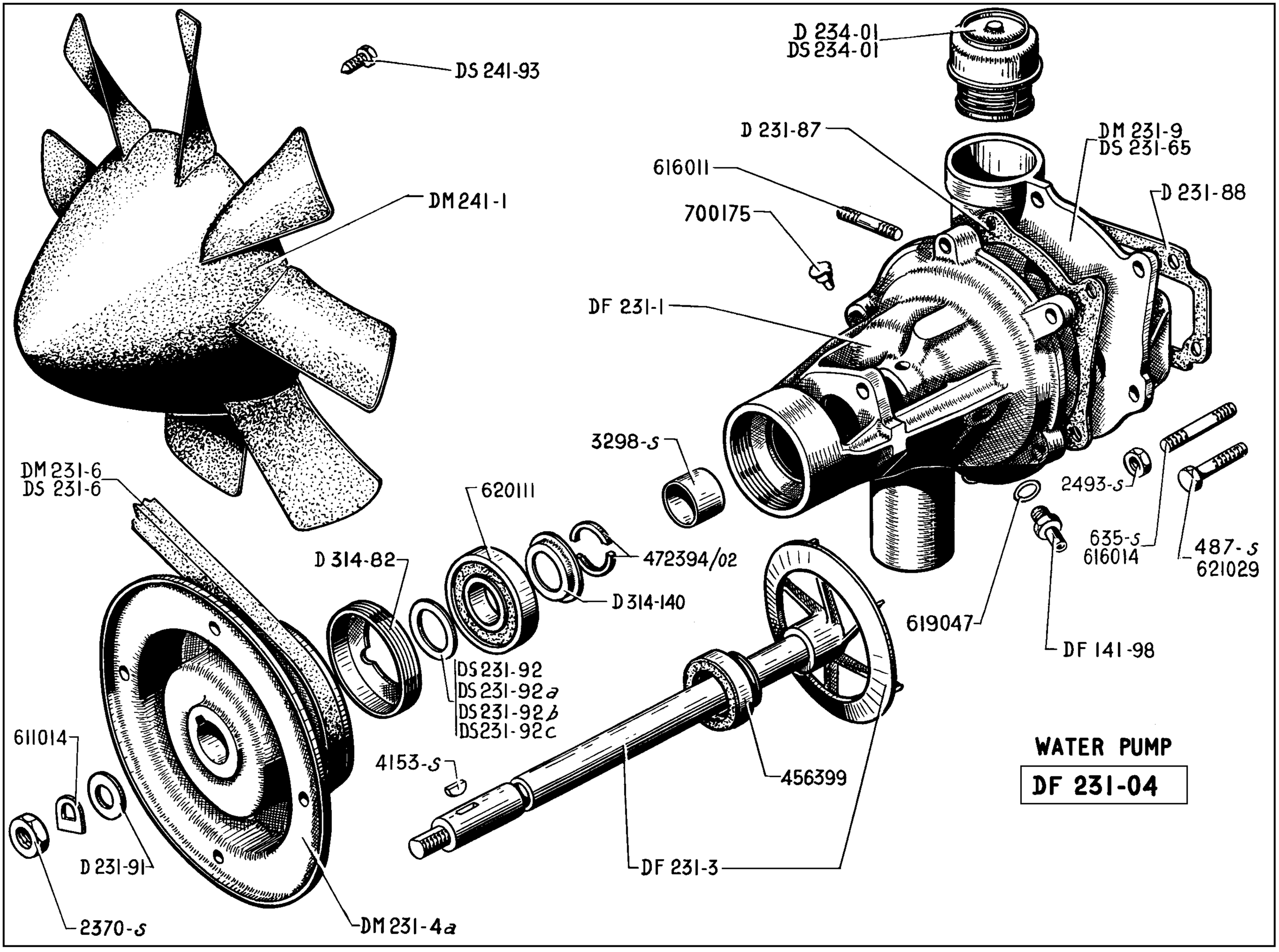
DS 241-93
DM 241-1
D 234-01
DS 234-01
D 231-87
DM 231-9
DS 231-65
616011
D 231-88
700175
DF 231-1
3298-S
2493-S
DM 231-6
DS 231-6
620111
635-S
616014
487-S
621029
472394/02
D 314-82
D 314-140
619047
DF 141-98
DS 231-92
DS 231-92a
DS 231-92b
DS 231-92c
611014
4153-S
456399
D 231-91
DF 231-3
2370-S
DM 231-4a
WATER PUMP
DF 231-04

NUMBER	DESCRIPTION	No. OFF
DF 141-98	Union for water outlet (threaded 20 x 150 pitch, external diameter 19 mm).	1
DF 231-04	*Water pump complete, without pulley, cover or thermostat (body with tapped hole 20 diameter x 150 pitch). Until June 1964. Replaced by DF 231-04a.*	1
DF 231-04a	Water pump complete, without pulley, cover or thermostat (nut locking bearing held by pin). Since June 1964.	1
DF 231-1	*Water pump body, bushed (hole tapped 20 diameter x 150 pitch, for water outlet union). Until June 1964. Replaced by DF 231-1a; order in addition: 1-451.415.*	1
DF 231-1a	Water pump body, bushed, (hole for locking pin for nut locking bearing). Since June 1964.	1
DF 231-3	Spindle for water pump with impeller attached (impeller 22.5 mm long).	1
DM 231-4a	Pulley for pump and fan.	1
DM 231-6	Belt, driving water pump and dynamo (R. VI). Until October 1961.	1
DS 231-6	Belt, driving water pump and dynamo (R. VI). Since October 1961.	1
DM 231-9	Cover for water pump with studs, EXCEPT COLD CLIMATES. EXCEPT AMBULANCE. Since September 1960.	1
DS 231-65	Cover only, for water pump, 2 tapped holes 5 mm diameter for heater pipe. AMBULANCE. Since September 1960. COLD CLIMATES.	1
231-87	Joint between water pump and cover (R. VI).	1
D 231-88	Joint between cover of water pump and cylinder head (R. VI).	1

NUMBER	DESCRIPTION	No. OFF
D 231-91	Washer, 9 x 28 x 4 under nut, securing pump and fan pulley.	1
	Washer for adjusting ball bearings on pump shaft, diameters 15.5 x 24.2:	As nec.
DS 231-92	1 mm thick.	
DS 231-92a	1.5 mm thick.	
DS 231-92b	2 mm thick.	
DS 231-92c	0.5 mm thick.	
D 234-01	Thermostat (R. VI). BREAK COMMERCIAL, FAMILY TYPE. EXCEPT -5° and -15°. Since September 1964.	1
DS 234-01	*Thermostat (R. VI). AMBULANCE and COLD CLIMATES. Replaced by DS 234-01a.*	1
DS 234-01a	Thermostat (R. VI). AMBULANCE and COLD CLIMATES -5° and 15°. Since September 1964.	1
DM 241-1	Fan, nylon, 8 blades (with securing bosses protruding 0.5 mm on contact face).	1
DS 241-93	Screw, hex. head, 7 diameter x 28 long (head 10 mm across flats) securing fan (R. VI).	4
D 314-82	Ring nut, external thread 45 diameter x 150 pitch, locking ball bearing on pump spindle. Until June 1964.	1
D 314-140	Cup retaining half segments (15.2 x 21 x 27 x 6).	1
487-S	Screw, hex. head, 7 diameter x 25 long, securing water pump (R. III).	1
635-S	Stud, 7 diameter x 30.5 long, (threaded 17 and 10.5) securing water pump on cover (R. III).	1
2.370-S	Nut, hex., 9 diameter x 125 pitch, securing pump and fan pulley (R. III).	1

NUMBER	DESCRIPTION	No. OFF
2.493-S	Nut, hex., 7 diameter x 100 pitch, securing water pump (R. III).	3
3.298-S	Bush, 15 x 19 x 20, for water pump body (R. VI).	1
4.153-S	Woodruff key, 4 x 5 x 13, securing pump and fan pulley (R. VI).	1
451.415	Nut, castellated (threaded externally 45 x 150) for locking roller bearing on pump shaft (R. I). Since June 1964.	1
456.399	Sealing ring, 15 mm internal diameter x 35 mm external diameter (R. VI).	1
472.394/02	Half segment locking ball bearing, height 9.4 mm (2 parts) (R. I).	1
611.014	Lockwasher, single, 9.5 mm diameter for nut securing pump and fan pulley (R. I). Until September 1961.	1
616.011	Stand, 5 diameter x 20 long (threaded 8 and 8) securing hot water inlet pipe on pump cover (R. I). AMBULANCE. Since September 1960. COLD CLIMATES.	2
616.014	Stud, 7 diameter x 35.5 long, securing pump on cover.	2
619.047	Joint for water outlet union, 20.5 x 26 x 1.5 to 2 (R. VI).	1
620.111	Ball bearing, 15 x 42 x 13, with twin sealing plate (R. VI).	1
621.029	Screw, hex. head, 10 diameter x 60 long, securing cover of water pump on cylinder head (R. I).	1
700.175	Oil on pump body (R. VI).	1

The numbers underlined indicate new parts which do not appear on the illustration.

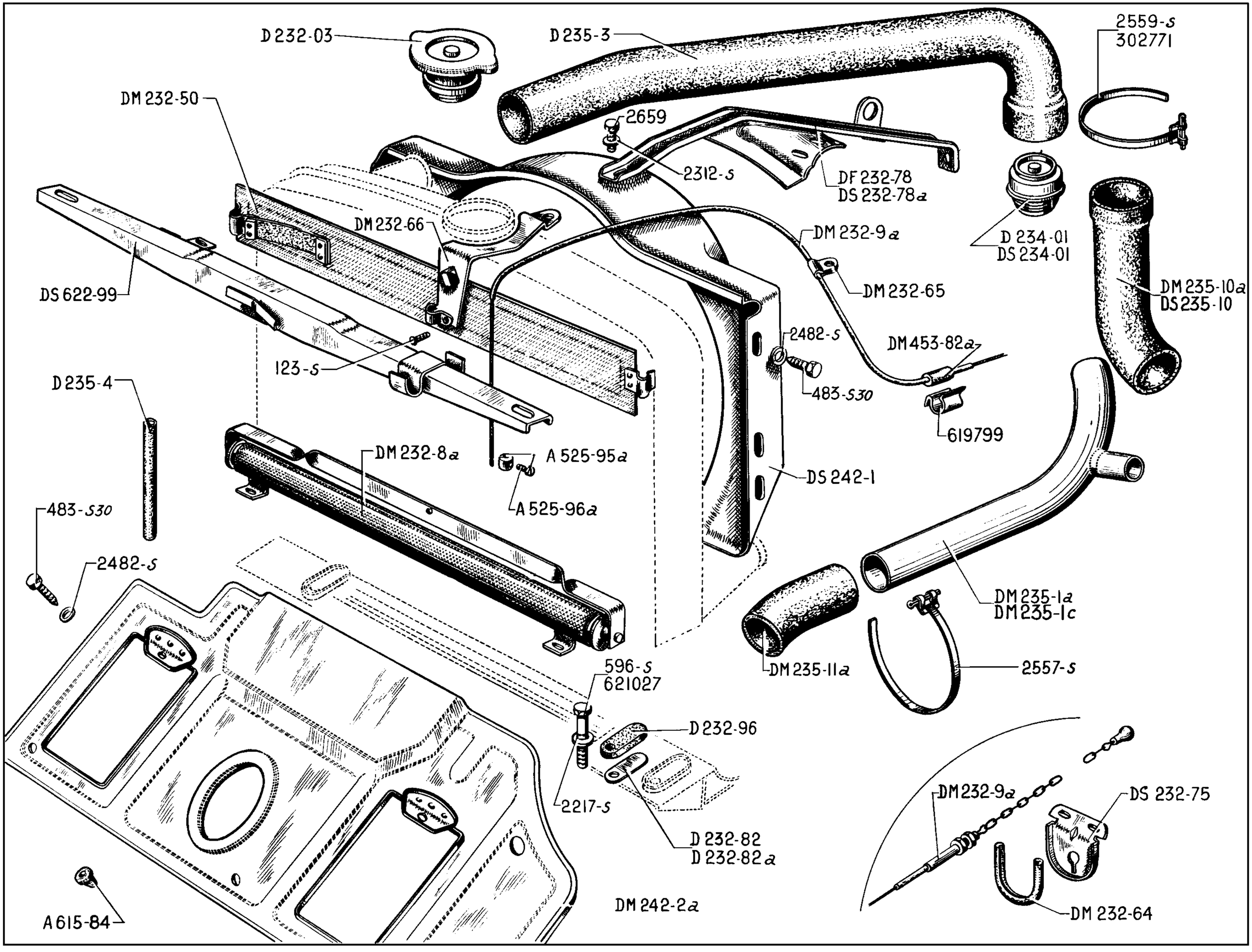
D 232-03
D 235-3
2559-s
302771
DM 232-50
2659
2312-s
DF 232-78
DS 232-78a
DM 232-66
DM 232-9a
D 234-01
DS 234-01
DS 622-99
DM 232-65
DM 235-10a
DS 235-10
2482-s
DM 453-82a
123-s
483-s30
D 235-4
619799
DM 232-8a
A 525-95a
DS 242-1
A 525-96a
483-s30
2482-s
DM 235-1a
DM 235-1c
DM 235-11a
2557-s
596-s
621027
D 232-96
2217-s
D 232-82
D 232-82a
DM 242-2a
DM 232-9a
DS 232-75
DM 232-64
A 615-84

NUMBER	DESCRIPTION	No. OFF
	Until September 1962	
A 615-84	Buffer, rubber, on deflector.	3
D 232-03	Radiator cap, AC (RC. 2) (R. VI).	1
DF 232-78	Tie-rod for radiator. EXCEPT AMBULANCE.	1
DS 232-78a	Tie-rod for radiator. AMBULANCE and COLD CLIMATES. Replaces earlier type.	1
D 232-82	Packing piece for radiator adjustment, 1 mm thick.	As nec.
D 232-82a	Packing piece for radiator adjustment, 2 mm thick.	As nec.
D 232-96	Pad, rubber, 60 x 35 x 16, under radiator bracket.	2
D 234-01	Thermostat Calorstat regulating water circulation to pump (R. VI). EXCEPT AMBULANCE.	1
DS 234-01	*Thermostat Dole regulating water circulation to pump (R. VI). AMBULANCE. Replaced by DS 234-01a.*	1
DS 234-01a	Thermostat Calorstat regulating water circulation (R. VI). AMBULANCE.	1
DM 235-1a	*Feed pipe between radiator and water pump with connecting pipe. Until November 1961. Replaced by DM 235-1c.*	1
DM 235-1c	Feed pipe between radiator and water pump with connecting pipe. Since November 1961.	1
D 235-3	Connecting pipe, upper, elbowed, between water pump and radiator.	1
D 235-4	Overflow pipe, rubber, 6 x 9 x 300 for radiator.	1

NUMBER	DESCRIPTION	No. OFF
DM 235-10a	Connecting pipe, rubber, between feed pipe and water pump. Until November 1961.	1
DS 235-10	Connecting pipe, rubber, between feed pipe and water pump. Since November 1961.	1
DM 235-11a	Connecting pipe, rubber, between inlet pipe and radiator, elbowed length 20 x 30.	1
DS 242-1	Fan cowl on radiator (R. VI).	1
DM 242-2a	Air deflector.	1
DS 622-99	Support for spare wheel with anchor plate for starting handle and extension.	1
483-S 30	Screw, hex. head, 7 diameter x 15 mm long (R. III) securing:	
	- fan cowl.	4
	- air deflector.	4
596-S	Screw, hex. head, 9 diameter x 42 mm long, securing radiator on bracket (R. III).	2
2.217-S	Washer, 9.5 x 16 x 2, for screw securing rubber pads under radiator (R. III).	2
2.312-S	Washer, 5.5 x 9 for screw securing tie-rod on radiator (R. III).	1
2.482-S	Washer, 7.5 x 14 (R. III) for screw securing:	
	- fan cowl.	4
	- air deflector.	4
2.557-S	Clip with split pin for securing connections on feed pipe, 366 mm long (R. VI).	4
2.559-S	Clip with split pin, 485 mm long (R. VI) securing upper union on thermostat.	1

NUMBER	DESCRIPTION	No. OFF
2.659	*Screw, hex. head, 5 diameter x 13 mm long, securing radiator tie-rod (R. III). Replaced by 283-S.*	1
2.884-S	Clip securing upper pipe connection on radiator (R. VI).	1
5.500-S	Nut, hex., 5 x 75, with collar, for securing radiator (R. III).	4
302.771	*Clip securing upper pipe connection on radiator (R. VI). Replaced by 2.884-S.*	1
614.028	Screw clip securing upper union on water pump cover (R. VI).	1
621.027	Screw, hex. head, 9 diameter x 50 long, securing radiator on bracket (R. III).	1
	RADIATOR BLIND	
	AMBULANCE	
	Until September 1962	
A 525-95a	Trunnion for blind control cable (R. VI).	2
A 525-96a	Screw, cylindrical head, for trunnion (R. VI).	2
DM 232-8a	Radiator blind (R. VI).	1
DM 232-9a	Blind control (R. VI).	1
DM 232-50	Shield for radiator.	1
DM 232-64	Protector, rubber, for chain support (R. VI).	1
DM 232-65	Retaining plate for sheath, on battery support (R. VI).	1
DM 232-66	Bracket for sheath on radiator.	1
DS 232-75	Bracket for chain stop (R. VI).	1
DM 453-82a	Protecting bush on cable sheath (R. VI).	1
123-S	Screw, round head, 5 diameter x 10 mm long, securing sheath to bracket (R. III).	1
619.799	Clip securing blind cable (R. VI).	2

The numbers underlined indicate new parts which do not appear on the illustration.

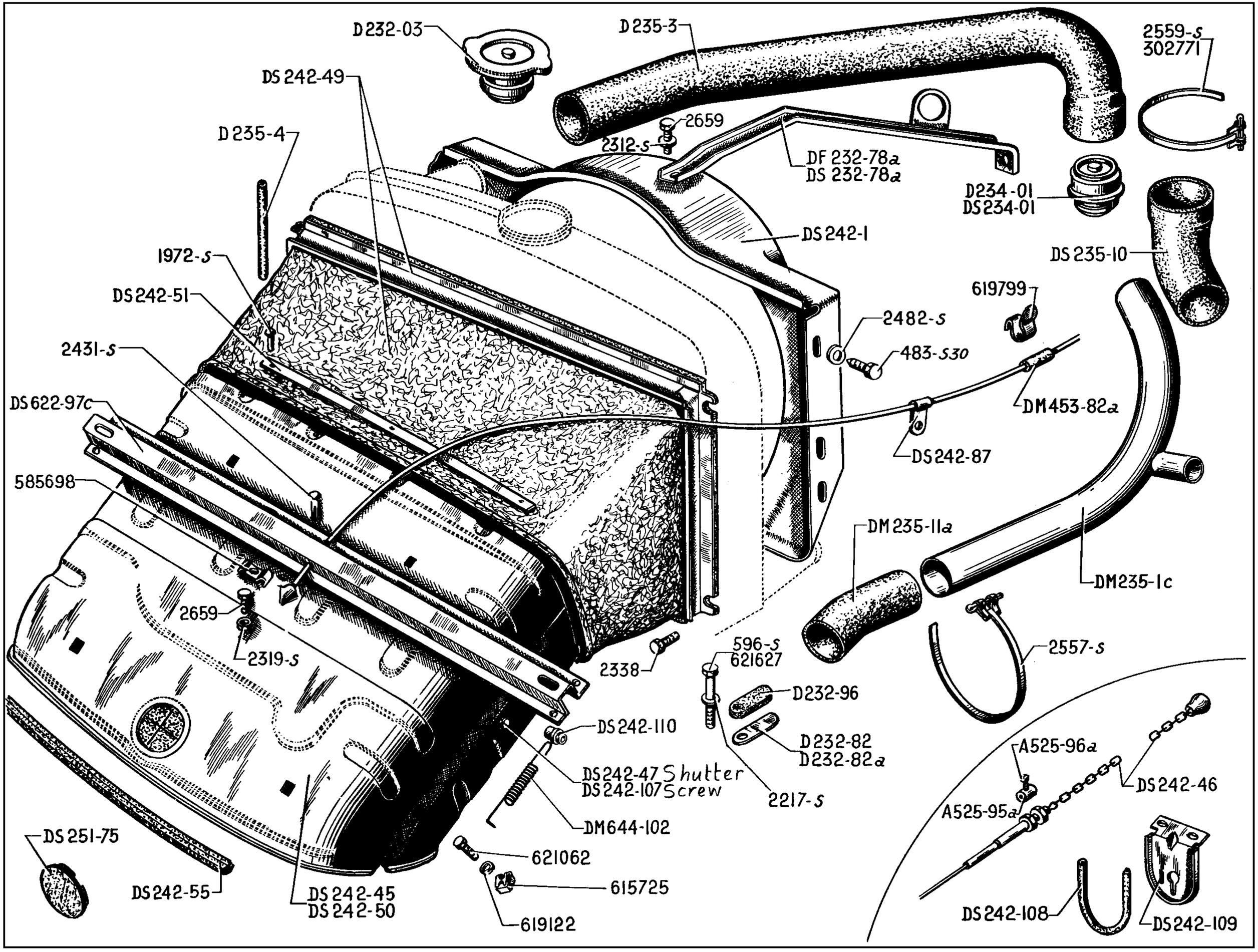
D232-03
D235-3
2559-s
302771
DS 242-49
D235-4
2659
2312-s
DF 232-78a
DS 232-78a
D234-01
DS234-01
DS 242-1
DS 235-10
1972-s
DS242-51
619799
2482-s
483-s30
2431-s
DS 622-97c
DM453-82a
DS242-87
585698
DM235-11a
DM235-1c
2659
2319-s
2338
596-s
621627
2557-s
D232-96
DS 242-110
D232-82
D232-82a
DS242-47 Shutter
DS242-107 Screw
2217-s
A525-96a
DS242-46
A525-95a
DM644-102
DS 251-75
621062
615725
DS242-55
DS 242-45
DS 242-50
619122
DS242-108
DS242-109

NUMBER	DESCRIPTION	No. OFF
	Since September 1962 Except COLD CLIMATES.	
D 232-03	Radiator cap, A. C. (RC. 2) (R. VI).	1
DF 232-78a	Tie-rod for radiator. EXCEPT AMBULANCE.	1
DS 232-78a	Tie-rod for radiator. AMBULANCE and COLD CLIMATES.	1
D 232-82	Packing piece for radiator adjustment, 1 mm thick.	As nec.
D 232-82a	Packing piece for radiator adjustment, 2 mm thick.	As nec.
D 232-96	Pad, rubber, 60 x 35 x 16, beneath radiator bracket.	2
D 234-01	Thermostat Calorstat regulating water circulation to pump (R. VI). EXCEPT AMBULANCE.	1
DS 234-01	*Thermostat Dole regulating water circulation to pump (R. VI). AMBULANCE. Replaced by DS 234-01a.*	1
DS 234-01a	Thermostat, Calorstat, regulating water circulation (R. VI). AMBULANCE.	1
DM 235-1c	Feed pipe between radiator and water pump with connecting tube.	1
D 235-3	Connecting tube, upper, with elbow, between water pump and radiator.	1
D 235-4	Overflow pipe, rubber, 6 x 9 x 300 for radiator.	1
DS 235-10	Connection, rubber, between feed pipe and water pump.	1
DM 235-11a	Connection, rubber, between inlet pipe and radiator, length of bend 20 x 30.	1
DS 242-1	Fan cowl on radiator (R. VI).	1
DS 242-49	*Frame with radiator flexible ventilation duct. Replaced by DS 242-49a.*	1
DS 242-49a	*Frame with radiator flexible ventilation duct. Replaced by DX 242-49b.*	1
DS 242-50	*Shell (rigid part) for ventilation duct. Replaced by DX 242-67.*	1
DS 242-51	Strap securing flexible part of duct on rigid part.	2
DS 242-55	*Sealing joint, rubber, for frame of ventilation duct on panel (R. VI). Replaced by 2-DS 242-55a.*	1

NUMBER	DESCRIPTION	No. OFF
DS 242-55a	Sealing joint, rubber, for frame of ventilation duct on panel (R. VI).	2
DS 242-90	Grille protecting rigid ventilation duct. Since September 1963.	1
DS 251-75	Plug (plastic) for starting handle opening (R. VI).	1
DS 622-97c	Support for spare wheel.	1
483-S 30	Screw, hex. head, 7 diameter x 10 long, securing fan cowl on radiator (R. III).	4
596-S	Screw, hex. head, 9 diameter x 42 long, securing radiator on bracket (R. III).	2
1.972-S	Rivet, round head, 2.4 x 6, securing flexible part of duct on rigid part (R. VI).	10
2.217-S	Washer, 9.5 x 16.2 for screws securing rubber packing under radiator (R. III).	2
2.312-S	Washer, 5.5 x 12, for screws securing tie-rod on radiator (R. III).	1
2.338	*Screw, hex. head, 5 diameter x 20 long, securing flexible duct on radiator (R. III). Replaced by 284-S*	4
2.482-S	Washer, 7.5 x 14 (R. III) for screws securing fan cowl.	4
2.557-S	Clip with pin securing connections on feed pipe, 366 mm long (R. VI).	4
2.559-S	Clip with pin, 485 mm long (R. VI) securing:	
	- upper connection on thermostat.	1
	- upper connection on pump cover	1
2.659	*Screw, hex. head, 5 diameter x 13 long, securing radiator tie-rod (R. III). Replaced by 283-S.*	1
2.884-S	Clip securing upper connection on radiator (R. VI).	1
5.500-S	Nut, hex., 5 x 75, with collar, for securing radiator (R. III).	4
302.771	*Clip securing upper connection on radiator (R. VI). Replaced by 2.884-S.*	1
615.725	Nut, 5 diameter x 75 pitch (in cage) for screws securing ventilation duct (R. VI).	4

NUMBER	DESCRIPTION	No. OFF
619.122	Washer, plain, 5.5 x 12 x 1, for screws securing ventilation duct (R. III).	4
621.027	Screw, hex. head, 9 diameter x 50 long, securing radiator on bracket (R. III).	1
621.062	Screw, hex. head, 5 diameter x 14 long, securing ventilation duct (R. III).	4
	SPECIAL PARTS AMBULANCE AND COLD CLIMATES	
A 525-95a	Trunnion for shutter control cable (R. VI).	1
A 525-96a	Screw, cylindrical head, for trunnion (R. VI).	1
DS 242-45	Frame (rigid part) for ventilation duct with closing shutter.	1
DS 242-46	Control for closing shutter (R. VI).	1
DS 242-47	Shutter for closing rigid duct.	1
DS 242-87	Plate retaining sheath on battery bracket (R. VI).	1
DS 242-107	Screw, securing closing shutter (R. VI).	2
DS 242-108	Protector, rubber, for chain bracket (R. VI).	1
DS 242-109	Bracket, for chain (R. VI).	1
DS 242-110	Articulating bearing for closing shutter (R. VI).	2
DM 453-82a	Protective bush on cable guide (R. VI)	1
DM 644-102	Return spring for closing shutter.	2
2.319-S	Nut, hex., 5 diameter x 75 pitch, securing screw fixing sheath (R. III).	1
2.431-S	Rivet, bifurcated, 4.8 x 14.5, securing cable on closing shutter (R. VI).	1
2.659	*Screw, hex. head, 5 diameter x 13 long, securing sheath on duct (R. III). Replaced by 283-S.*	1
585.698	Clamp securing sheath on rigid duct (R. III).	1
619.799	Clip securing closing shutter cable (R. VI).	1

The numbers underlined indicate new parts which do not appear in the illustration.

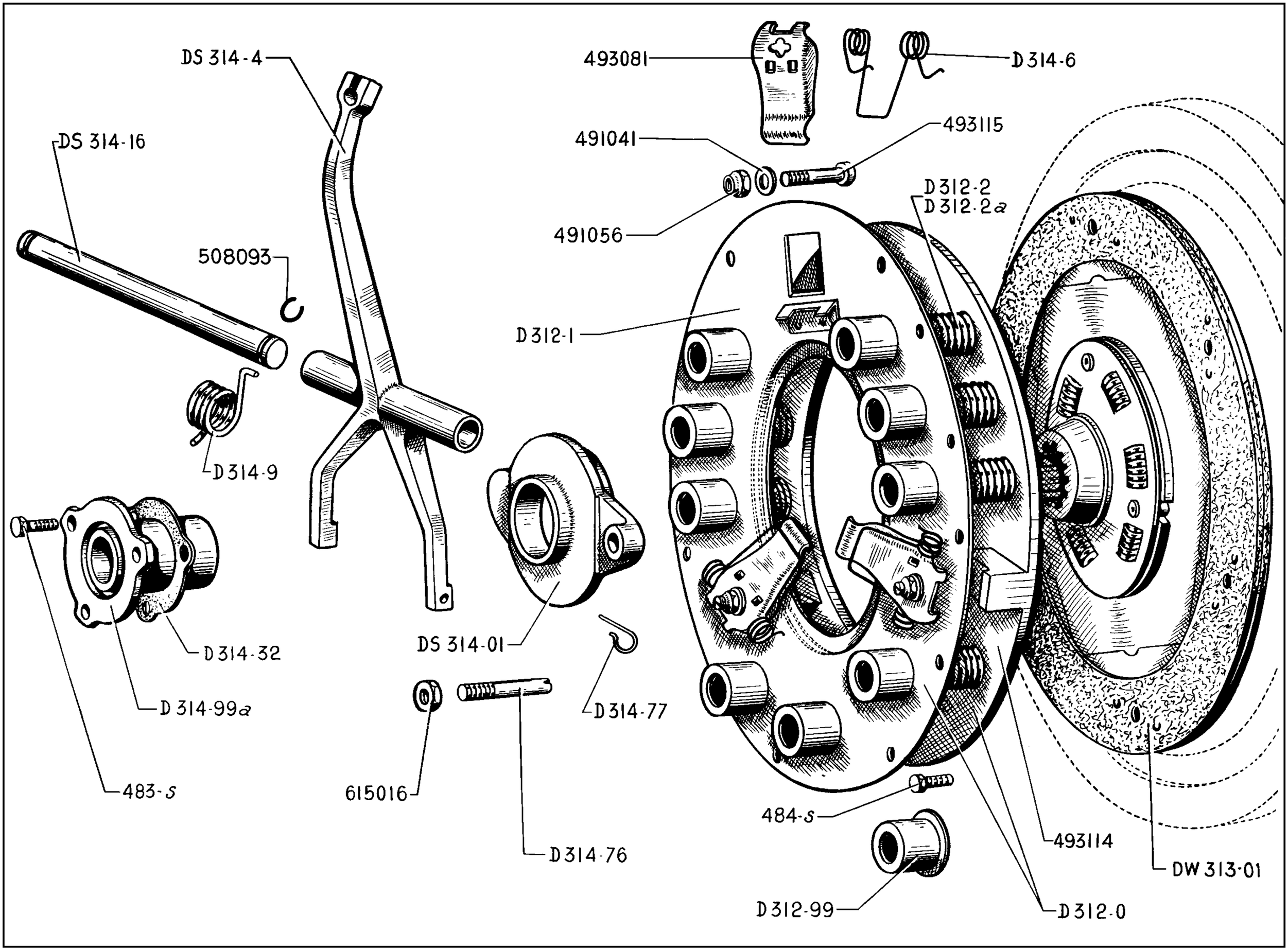
DS 314-4
493081
D 314-6
DS 314-16
491041
493115
D 312-2
D 312-2a
491056
508093
D 312-1
D 314-9
D 314-32
DS 314-01
D 314-99a
D 314-77
483-s
615016
D 314-76
484-s
493114
DW 313-01
D 312-99
D 312-0

NUMBER	DESCRIPTION	No. OFF
D 312-0	*Clutch mechanism (R. VI). Until March 1965. Replaced by DS 312-0a.*	1
DS 312-0a	Clutch mechanism with insulating washers (R. VI) (marked DS white paint). Since March 1965.	1
D 312-1	Carrier plate for clutch toggles, 243 mm diameter (R. VI).	1
D 312-2	*Clutch spring (marked green) (R. VI). Until March 1965. Replaced by DS 312-2; order in addition 1-DS 312-80.*	3
D 312-2a	*Clutch spring (marked white) (R. VI). Until March 1965. Replaced by DS 312-2a; order in addition: 1-DS 312-80.*	6
DS 312-2	Clutch spring (marked light green) (R. VI). Since March 1965.	3
DS 312-2a	Clutch spring (marked purple red) (R. VI). Since March 1965.	6
DS 312-80	Insulating washer (R. VI).	9
D 312-99	Cup for clutch spring, 26.5 mm high, internal diameter 29 mm (R. VI).	9
DW 313-01	Clutch disc (hub with springs), 215 mm diameter, 12 splines (R. VI).	1
DS 314-01	Housing for clutch thrust race.	1
DS 314-4	*Clutch fork. Thickness of head 11 mm. Until December 1963. Replaced by DS 314-4a.*	1
DS 314-4a	Clutch fork. Thickness of head 8.5 mm. Since December 1963.	1

NUMBER	DESCRIPTION	No. OFF
D 314-6	Return spring for clutch toggles (R. VI).	3
D 314-9	Return spring for clutch fork (R. VI).	1
DS 314-16	Spindle for clutch fork (10 x 126.4, with 2 grooves for circlip).	1
D 314-32	Paper gasket for ball thrust bearing sleeve (R. VI).	1
D 314-76	Guide pin for thrust bearing sleeve, threaded 9 diameter x 125 pitch, total length 52 mm.	1
D 314-77	Retaining spring for ball thrust bearing.	2
D 314-99a	Hub for thrust bearing.	1
483-S	Screw, hex. head, 7 diameter x 15 long, securing hub for thrust bearing (R.III).	3

NUMBER	DESCRIPTION	No. OFF
484-S	Screw, hex. head, 7 diameter x 17.5 long, securing clutch mechanism on flywheel (R. III).	6
491.041	Washer, 10 x 18 x 2.5, for clutch toggle adjusting screws (R. VI).	3
491.056	Nut, 8 diameter x 75 pitch, for clutch toggle adjusting screws (R. VI).	3
493.081	Clutch toggle, 87.5 mm long (R. VI).	3
493.114	Clutch pressure plate, 216 mm diameter holes for toggle screws, 8.5 mm, 10.5 mm and 16 mm diameter (R. VI).	1
493.115	Screw, cylindrical head, 8 diameter x 41 long, for clutch toggle adjustment (R. VI).	3
508.093	Circlip, 8.8 x 10.8, for clutch withdrawal fork shaft (R. I).	2
615.016	Nut, hex., 9 diameter x 125 pitch, height 4 mm securing clutch thrust guide pin (R. I).	1

The numbers underlined indicate new parts which do not appear on the illustration.

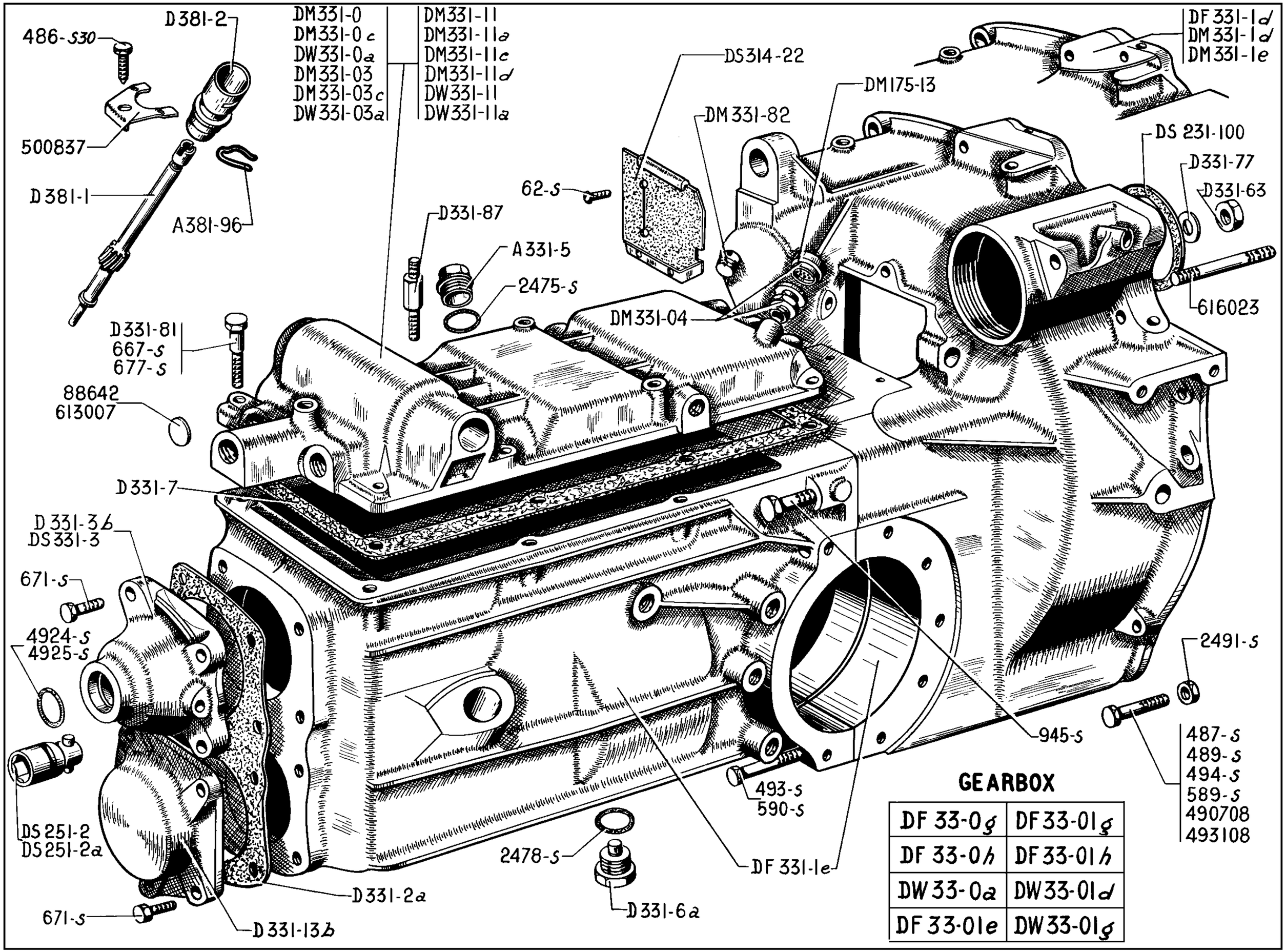

GEARBOX

DF 33-0g	DF 33-01g
DF 33-0h	DF 33-01h
DW 33-0a	DW 33-01d
DF 33-01e	DW 33-01g

NUMBER	DESCRIPTION	No. OFF
	GEARBOX COMPLETE	
	Gearbox, crown wheel and pinion, 8 x 31, complete with: clutch withdrawal fork and thrust bearing, brake discs, lateral arms and upper support.	1
DF 33-0g	- *with water pump driving shaft (drive fixed by 9 mm diameter screws). L.H. steering. October 1961 to September 1962. Replaced by DM 33-0d; order in addition: 1-DW 313-01 (R. VI).*	
DF 33-0h	- *without water pump driving shaft (drive fixed by 7 mm diameter screws). L.H. steering. Until October 1961. Replaces earlier types. Replaced by DM 33-0d (see MR 4479/1).*	
DF 33-0j	- arrangement with tripod transmission, without brake disc. L.H. steering. Since October 1964.	
DM 33-0d	- Reverse gear sliding pinion out of mesh. L.H. steering. July 1964 - October 1964.	
DW 33-0a	- *1st speed synchronised. L.H. steering. September 1962 - July 1964. Replaced by DM 33-0d.*	
DF 33-01e	- *Reverse speed out of mesh, 2nd speed ratio 17 x 33 with breather R.H. steering. Until July 1961. Replaces earlier types. Replaced by DF 33-01h.*	
DF 33-01g	- *with water pump driving shaft (drive fixed by 9 mm diameter screws). R.H. steering. October 1961-September 1962. Replaced by DW 313-01g; order in addition: 1-DW 313-01 (R. VI), 1-DM 314-39f (R. VI), 1-DM 314-36c, 1-DF 391-103.*	
DF 33-01h	- without water pump driving shaft (drive fixed by 7 mm diameter screws). R.H. steering. July 1961 - October 1961.	

NUMBER	DESCRIPTION	No. OFF
DF 33-01j	- arrangement with tripod transmission, without brake disc. R.H. steering. Since October 1964.	
DM 33-01j	- Reverse gear sliding pinion out of mesh. R.H. steering. July 1964 - October 1964.	
DW 33-01d	- *1st speed synchronised. R.H. steering. September 1962 - November 1962. Replaced by DW 33-01g; order in addition: 1-DM 314-39f (R. VI), 1-DM 314-36c, 1-DF 391-103.*	
DW 33-01g	- *inclined hole for clutch cable fixing. R.H. steering. November 1962 - July 1964. Replaced by DM 33-01j.*	
	GEARBOX HOUSING	
A 331-5	Filler plug, hex. head, 30 diameter x 200 pitch.	1
A 381-96	Locking piece for speedometer cable.	1
DM 175-13	Filter for breather on gearbox (R. VI). Since April 1961.	1
DS 231-100	Joint between clutch bellhousing and cylinder block (40 x 50 x 0.1) (R. VI).	1
DS 251-2	Spindle with pin for starting handle. (Assembly with ring seal in cap). Until March 1962.	1
DS 251-2a	Spindle with pin for starting handle. (Groove for ring seal). Since March 1962.	1
DS 314-22	Closing plate, rubber, for hole of clutch withdrawal fork.	1
	Lid, upper, for gearbox complete with shafts, forks and locking device.	1
DM 331-0	- L.H. steering. Until February 1961.	
DM 331-0c	- with breather. L.H. steering. February 1961 - September 1962.	

NUMBER	DESCRIPTION	No. OFF
DM 331-0g	- Arrangement with reverse gear sliding pinion out of mesh. L.H. steering. Since July 1964.	
DW 331-0a	- 1st speed synchronised. L.H. steering. September 1962-July 1964.	
DM 331-03	- R.H. steering. Until February 1961.	
DM 331-03c	- with breather. R.H. steering. February 1961-September 1962.	
DM 331-03g	- Arrangement with reverse gear sliding pinion out of mesh. R.H. steering. Since July 1964.	
DW 331-03a	- 1st speed synchronised. R.H. steering. September 1962 - July 1964.	
DM 331-04	Breather on gearbox with filter. Since April 1961.	1
DF 331-1d	Gearbox and clutch housing assembly (gearbox housing, housing for front bearings 62 mm diameter, clutch housing without greasing hole for bearing of shaft driving water pump, fork shaft locking by circlip). R.H. steering. February 1961 - September 1962. Replaces earlier type.	1
DF 331-1e	Gearbox and clutch housing assembly (gearbox housing, housing for front bearings 62 mm diameter, clutch housing without greasing hole for bearing of shaft driving water pump, fork shaft locked by circlips). L.H. steering. Since September 1962. Replaces earlier types.	1
DM 331-1d	*Gearbox and clutch housing assembly. R.H. steering. September 1962 - November 1962. Replaced by DM 331-1e; order in addition: 1-DM 314-39f, 1-DM 314-36c, 1-DF 391-103.*	1
DM 331-1e	Gearbox and clutch housing assembly inclined hole for fixing clutch cable. R.H. steering. Since November 1962.	1
D 331-2a	Double joint for front face of gearbox housing (R. VI).	1

The numbers underlined indicate new parts which do not appear on the illustration.

NUMBER	DESCRIPTION	No. OFF
D 331-3b	*Cap for mainshaft front bearing, bearing housing, 67.5 mm diameter, 5.35 mm wide. (With interior groove for ring seal). Until March 1962. Replaced by DS 331-3; order in addition: 1-DS 251-2a, 1-4.924-S (R. VI).*	1
DS 331-3	Cap for mainshaft front bearing, (without groove for ring seal). Since March 1962.	1
DS 331-6a	Drain plug, hex. head, 16 diameter x 150 pitch, with magnetised dowel (R. VI).	1
D 331-7	Joint, paper, for gearbox lid (R. VI).	1
	Lid only, upper, for gearbox.	1
DM 331-11	- *6 holes, threaded 16 diameter x 150 pitch. Until December 1959. Replaced by DM 331-11a; order in addition: 2-88.642 (R. I).*	
DM 331-11a	- 4 holes threaded 16 diameter x 150 pitch and 2 plain holes. December 1959 - February 1961.	
DM 331-11c	- 3 holes threaded 16 diameter x 150 pitch and 3 plain holes. February 1961 - September 1962.	
DM 331-11d	- Tapped 9 diameter for breather. April 1961 - September 1962.	
DW 331-11f	- 2 holes threaded at front and 1 hole threaded at rear (breather fitting). Since July 1964.	

NUMBER	DESCRIPTION	No. OFF
DW 331-11	- 1st speed synchronised, except breather arrangement. September 1962 - July 1964.	
DW 331-11a	- 1st speed synchronised, breather arrangement. September 1962 - Julv 1964.	
D 331-13b	Cap for bevel pinion front bearing, bearing housing: 67.5 mm diameter, 5.35 mm wide.	1
D 331-63	Nut, hex., with collar, 12 diameter x 175 pitch, for assembling gearbox and clutch housing (R. VI).	4
D 331-77	Washer, 12.5 x 18 x 2.5, under nut for assembling gearbox and clutch housing.	4
D 331-81	Screw, hex. head, 8 diameter x 32 long, for securing and centring gearbox lid.	2
DM 331-82	Sleeve for air vent on gearbox lid, threaded 9 diameter x 125 pitch, 10 mm long (R. VI). Since November 1962.	1
D 331-87	Shouldered stud for securing gearbox lid, hexagonal, shoulder 25.5 mm long, threaded 8 diameter x 125 pitch, total length 66.5 mm.	2
D 381-1	Pinion for speedometer drive (15 teeth).	1
D 381-2	Socket for speedometer pinion (cable secured by locking piece).	1
62-S	Screw, round head, 4 diameter x 7.5 long, securing rubber closing plate for clutch withdrawal fork (R. III).	3

NUMBER	DESCRIPTION	No. OFF
486-S 30	Screw, hex. head, pointed, 7 diameter x 22.5 long, securing speedometer pinion socket (R. III).	1
487-S	Screw, hex. head, 7 diameter x 25 long, securing clutch housing to engine (R. III).	2
489-S	Screw, hex. head, 7 diameter x 30 long, securing clutch housing to engine (R. III).	1
493-S	Screw, hex. head, 7 diameter x 40 long, assembling gearbox and clutch housing (R. III).	4
494-S	Screw, hex. head, 7 diameter x 42 long, securing clutch housing to sump (R. III).	2
589-S	Screw, hex. head, 7 diameter x 60 long, securing clutch housing to engine (R. III).	2
590-S	Screw, hex. head, 7 diameter x 65 long, securing clutch housing to engine (R. III).	3
667-S	Screw, hex. head, 8 diameter x 25 long, securing gearbox lid (R. III).	2
671-S	Screw, hex. head, 8 diameter x 35 long, securing mainshaft front bearing cap (R. III).	9
677-S	Screw, hex. head, 8 diameter x 50 long, securing gearbox lid (R. III).	2
945-S	Screw, hex. head, 10 diameter x 48 long, assembling gearbox and clutch housing (R. III).	2

The numbers underlined indicate new parts which do not appear on the illustration.

NUMBER	DESCRIPTION	No. OFF
2.475-S	Washer, copper - asbestos, 30.5 x 38 x 2.3 for filler plug (R. VI).	1
2.478-S	Joint, copper, 16.3 x 22 x 2, for drain plug (R. VI).	1
2.491-S	Nut, hex., 7 diameter x 100 pitch, securing clutch housing to sump (R. III).	2
4.924-S	Ring seal, 18.4 x 24.1 x 2.7, on starting handle spindle (R. VI). Since March 1962.	1
4.925-S	Ring seal, 19.8 x 27 x 3.6, for cap for front mainshaft bearing (R. VI). Until March 1962.	1
88.642	Expanding sealing washer, 15.9 mm diameter (R. I).	1
490.708	Screw, round head, special, 7 diameter x 22.5 long, securing clutch housing to engine (R. I).	2
493.108	Screw, 7 diameter x 38.5 long, securing clutch housing to engine (R. I).	2
500.837	Retainer for speedometer drive socket (R. I).	1
613.007	Expanding sealing washer, 12 mm diameter (R. I).	1
616.023	Stud, 12 diameter x 74 long, threaded 18 and 22, for assembling gearbox and clutch housing (R. I).	4

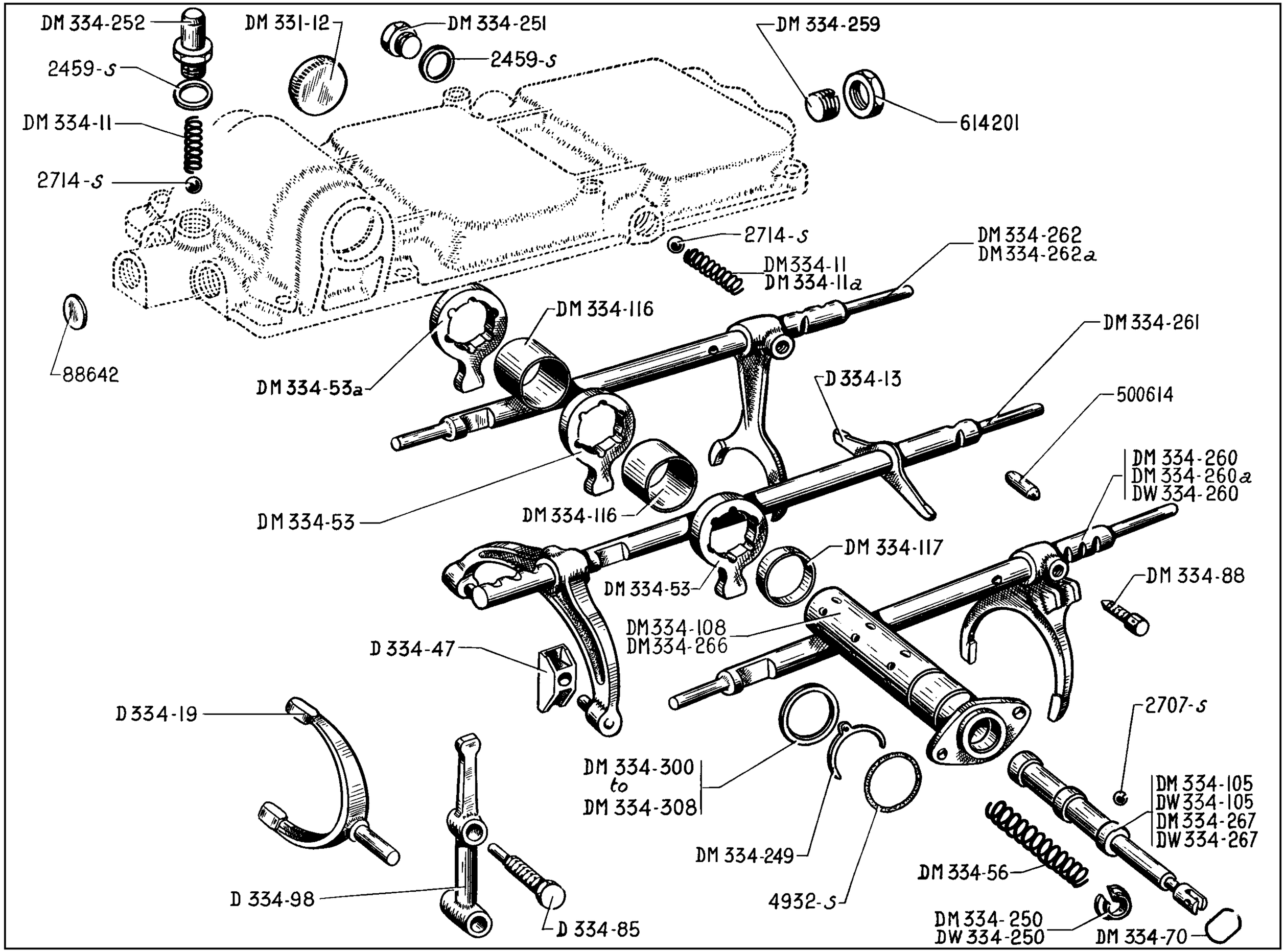
DM 334-252
2459-s
DM 334-11
2714-s
88642
DM 331-12
DM 334-251
2459-s
DM 334-259
614201
2714-s
DM334-11
DM 334-11a
DM 334-262
DM 334-262a
DM 334-116
DM 334-53a
DM 334-261
D 334-13
500614
DM 334-53
DM 334-116
DM 334-260
DM 334-260a
DW 334-260
DM 334-117
DM 334-53
DM 334-88
DM334-108
DM334-266
D 334-47
D 334-19
2707-s
DM 334-300
to
DM 334-308
DM 334-105
DW 334-105
DM 334-267
DW 334-267
DM 334-249
DM 334-56
D 334-98
4932-s
D 334-85
DM 334-250
DW 334-250
DM 334-70

NUMBER	DESCRIPTION	No. OFF
DM 331-12	Steel plug, 28 mm diameter for gear control housing.	1
DW 334-1a	Selector fork shaft for 1st and 2nd speeds, 208 mm long. Since November 1964.	1
DM 334-11	Spring retaining locking ball (6.8 internal diameter x 9.2 external diameter x 14 coils).	
	February 1961 - March 1961.	2
	March 1961 - November 1964.	3
	Since November 1964.	2
DM 334-11a	*Spring retaining locking ball of reverse speed (6.3 internal diameter x 9.5 external diameter x 11 coils). February 1961 - March 1961. Replaced by DM 334-11.*	1
DM 334-11b	Spring retaining locking ball of 1st and 2nd speed (6.2 x 9.2 x 12 coils). Since November 1964.	1
DW 334-17	Selector for 1st and 2nd speed. Since September 1962.	1
DM 334-18	Selector for reverse.	1
D 334-19	Selector for 1st speed. Until September 1962.	1
DW 334-19	Selector for 1st speed, total length 72.5 mm. Since September 1962.	1
DM 334-22	Selector fork shaft for reverse, 257 mm long. Since July 1964.	1
D 334-47	Fork slide block for 3rd and 4th speeds.	2
DM 334-53	Control lever for selector fork shafts.	3
	February 1961 - July 1964.	2
	Since July 1964.	3
DM 334-53a	Control lever for reverse speed selector fork shaft. February 1961 - July 1964.	1

NUMBER	DESCRIPTION	No. OFF
DM 334-56	Return spring for locking lever (14 x 19 x 15 coils).	1
DM 334-70	Circlip for washer and return spring for locking lever.	1
D 334-85	Pin, hex. head (threaded 14 diameter x 100 pitch, total length 44.5 mm), for operating lever of 1st speed selector fork.	1
DM 334-88	Screw, hex. head, pointed, 9 diameter x 18.5 long, securing selector fork.	3
D 334-98	Lever operating 1st speed selector fork.	1
DM 334-105	*Locking lever for levers operating selector fork shafts. L.H. steering Until December 1962. Replaced by DW 334-105.*	1
DW 334-105	Locking lever for levers operating selector fork shafts. Left-hand steering. Since December 1962.	1
DM 334-108	Support tube for levers operating selector fork shafts with flange. Left-hand steering.	1
DM 334-116	Distance piece for levers operating selector fork shafts (28.5 x 32 x 23.2).	2
DM 334-117	Distance piece for levers operating selector fork shafts (28.5 x 32 x 6).	1
DM 334-249	Circlip for levers operating selector fork shafts (R. VI).	1
DM 334-250	Split cotter for locking lever return spring, (8.5 x 22.5 x 4.2). Until December 1962.	1
DW 334-250	Split cotter for locking lever return spring, (8.5 x 22.5 x 3.5). Since December 1962.	1

NUMBER	DESCRIPTION	No. OFF
DM 334-251	Screw, hex. head, 14 diameter x 8 long, retaining springs for locking ball, 1st, 2nd and reverse speeds.	2
DM 334-252	Spring retaining cap (threaded 14 diameter x 150 pitch) for locking ball springs, 3rd and 4th speeds.	1
DM 334-259	Threaded thrust socket, for gear selector shaft (threaded 16 diameter x 150 pitch x 15 mm long).	
	Until December 1959.	6
	December 1959 - February 1961.	4
	Since February 1961.	3
DM 334-260	Selector shaft and fork for 1st and 2nd speeds (shaft 240 mm long). Until February 1961.	1
DM 334-260a	Selector shaft and fork for 1st and 2nd speeds (shaft 248 mm long). February 1961 - September 1962.	1
DW 334-260	*Selector shaft and fork for 1st and 2nd speeds (shaft 208 mm long). September 1962 - November 1964. Replaced by DW 334-1a; order in addition: 1-DM 334-11b, 1-DW 334-17.*	1
DM 334-261	Selector shaft and fork for 3rd and 4th speeds (shaft 240 mm long).	1
DM 334-262	*Selector shaft and fork for reverse speeds (shaft 257 mm long). Until February 1961. Replaced by DM 334-22; order in addition: 1-DM 334-18.*	1
DM 334-262a	Selector shaft and fork for reverse speed (shaft 214 mm long). February 1961 - July 1964.	1
DM 334-266	Support tube for levers operating selector fork shafts. Right-hand steering.	1
DM 334-267	Locking lever. Right-hand steering. Until December 1962.	1

The numbers underlined indicate new parts which do not appear on the illustration.

NUMBER	DESCRIPTION	No. OFF
DW 334-267	Locking lever. R.H. steering. Since December 1962.	1
	Washer, adjusting, for operating levers of selector fork shafts, 28.5 mm internal diameter x 36 mm external diameter:	As nec.
DM 334-300	1.76 mm thick.	
DM 334-301	1.85 mm thick.	
DM 334-302	1.94 mm thick.	
DM 334-303	2.03 mm thick.	
DM 334-304	2.12 mm thick.	
DM 334-305	2.21 mm thick.	
DM 334-306	2.3 mm thick.	
DM 334-307	2.39 mm thick.	
DM 334-308	2.48 mm thick.	

NUMBER	DESCRIPTION	No. OFF
2.459-S	Sealing ring, copper, 14.3 x 19 x 1 under thrust socket for locking ball spring (R. VI).	3
2.707-S	Locking ball, 6 diameter for levers operating the selector fork shafts (R. VI).	18
2.714-S	Locking ball, 9.52 diameter for selector shafts (R. VI).	3
4.932-S	Ring seal, 24.2 internal diameter x 28 external diameter x 1.9 mm thick for lever support tube (R. VI).	1

NUMBER	DESCRIPTION	No. OFF
88.642	Expanding sealing washer, for 15.9 mm diameter, 3rd and 4th speed shaft holes (R. I). December 1959 - February 1961.	2
	Since February 1961.	3
500.614	Locking plunger (9.5 x 18.2) (R. I).	2
614.201	Nut, hex., 16 diameter x 150 pitch x 5 mm thick, locking thrust sockets for selector shafts (R. II).	
	Until December 1959.	6
	December 1959 - February 1961.	4
	Since February 1961.	3

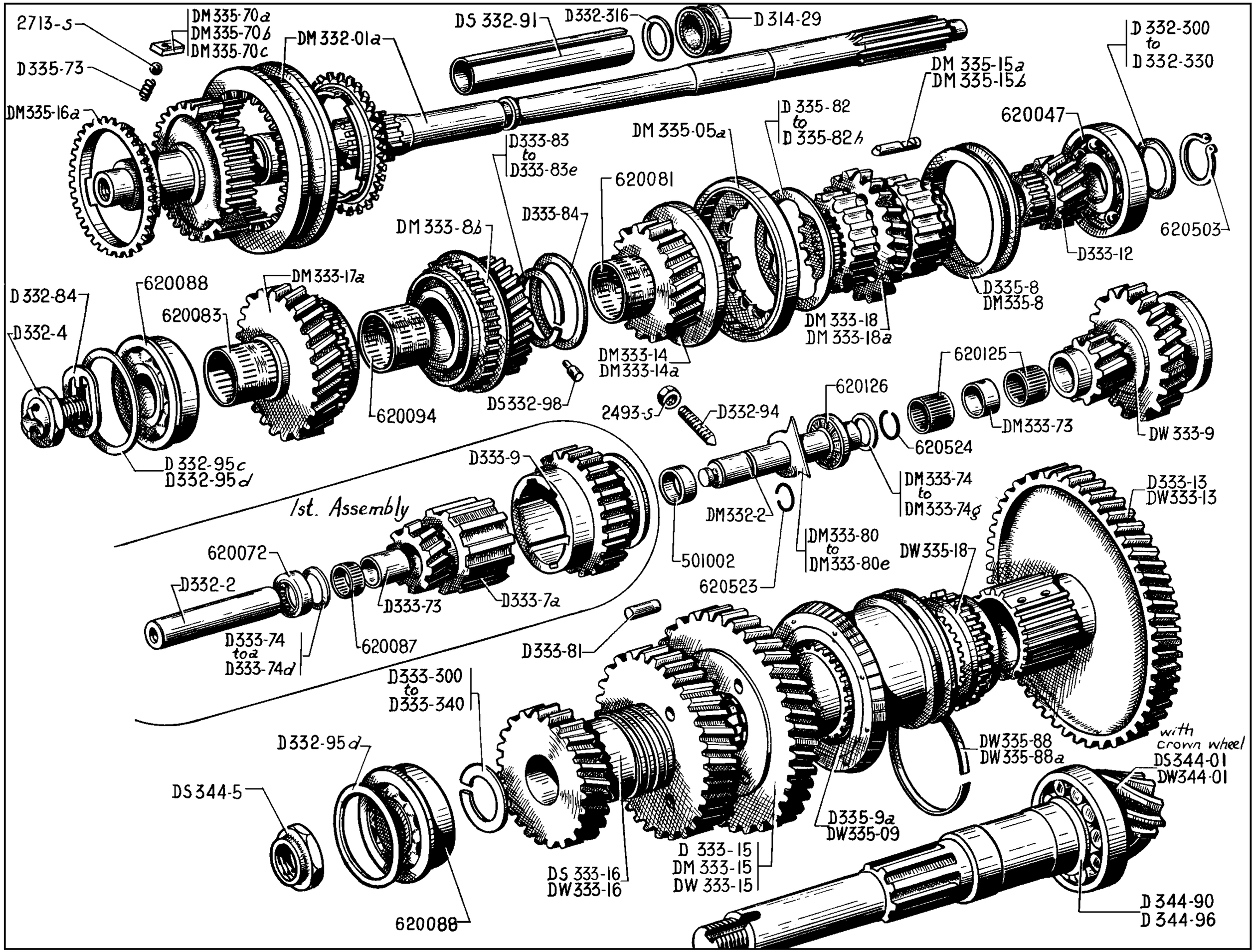
2713-s
DM 335-70a
DM 335-70b
DM 335-70c
D 335-73
DM 335-16a
DM 332-01a
DS 332-91
D332-316
D 314-29
D 332-300
to
D 332-330
DM 335-15a
DM 335-15b
620047
D 335-82
to
D 335-82h
DM 335-05a
D333-83
to
D333-83e
620081
D333-84
DM 333-8b
620503
D333-12
D 332-84
620088
DM 333-17a
620083
D332-4
D335-8
DM335-8
DM 333-18
DM 333-18a
DM 333-14
DM 333-14a
620125
620126
DS 332-98
2493-s
D332-94
620094
DM333-73
DW 333-9
620524
D 332-95c
D 332-95d
D333-9
1st. Assembly
DM 333-74
to
DM 333-74g
D333-13
DW333-13
DM332-2
DM333-80
to
DM333-80e
DW 335-18
620072
501002
620523
D332-2
D333-73
D333-7a
D333-74
to
D333-74d
620087
D333-81
D333-300
to
D333-340
with
crown wheel
DS344-01
DW344-01
D332-95d
DW335-88
DW335-88a
DS344-5
D335-9a
DW335-09
D 333-15
DM 333-15
DW 333-15
DS 333-16
DW333-16
D 344-90
D 344-96
620088

NUMBER	DESCRIPTION	No. OFF
D 314-29	Sealing ring on mainshaft (20 x 35 x 18) (R. VI).	1
DM 332-01a	*Mainshaft, synchromesh assembly for 3rd and 4th speeds (straight tooth entry). Until November 1963. Replaced by DM 332-01b; order in addition: 1-DS 332-4 (R. VI).*	1
DM 332-01b	Mainshaft, synchromesh assembly for 3rd and 4th speeds (without stopping device). Since November 1963.	1
D 332-2	*Shaft for intermediate reverse speed pinion (16 x 120). Until February 1961. Replaced by DS 332-2.*	1
DM 332-2	Shaft for intermediate reverse speed pinion (16 x 120, 1 groove for locking circlip). February 1961 - July 1964.	1
DS 332-2	Shaft for intermediate reverse speed pinion, 16 x 124. Since July 1964.	1
D 332-4	Dog nut, 16 diameter x 150 pitch, internal bore 7 mm diameter. Until November 1963.	1
DS 332-4	Dog nut, 18 diameter x 125 pitch (R. VI). Since November 1963.	1
D 332-84	Lockwasher for dog nut (internal diameter 17 mm). Until November 1963.	1
DS 332-91	Distance piece retaining sealing ring (20 x 21.6 x 118.8).	1
D 332-94	Grub screw, pointed, 7 diameter x 31 long, securing intermediate reverse speed pinion shaft.	1
	Washer, 54 internal diameter x 66.5 external diameter for adjusting: front end of mainshaft front bearing for bevel pinion.	As nec.
D 332-95c	0.1 mm thick.	
D 332-95d	0.05 mm thick.	
DS 332-98	Dowel pin, 2.7 x 2.9 x 5, for half washers between 2nd and 3rd speed pinions (R. VI).	1

NUMBER	DESCRIPTION	No. OFF
	Washer, thrust for rear ball bearing on gearbox mainshaft, 20 internal diameter x 28 external diameter:	As nec.
D 332-300	4.5 mm thick.	
D 332-301	4.53 mm thick.	
D 332-302	4.56 mm thick.	
D 332-303	4.59 mm thick.	
D 332-304	4.62 mm thick.	
D 332-305	4.65 mm thick.	
D 332-306	4.68 mm thick.	
D 332-307	4.71 mm thick.	
D 332-308	4.74 mm thick.	
D 332-309	4.77 mm thick.	
D 332-310	4.80 mm thick.	
D 332-311	4.83 mm thick.	
D 332-312	4.86 mm thick.	
D 332-313	4.89 mm thick.	
D 332-314	4.92 mm thick.	
D 332-315	4.95 mm thick.	
D 332-316	4.98 mm thick (and thrust for sealing ring).	1
D 332-317	5.01 mm thick.	
D 332-318	5.04 mm thick.	
D 332-319	5.07 mm thick.	
D 332-320	5.10 mm thick.	
D 332-321	5.13 mm thick.	
D 332-322	5.16 mm thick.	
D 332-323	5.19 mm thick.	
D 332-324	5.22 mm thick.	
D 332-325	5.25 mm thick.	
D 332-326	5.28 mm thick.	
D 332-327	5.31 mm thick.	
D 332-328	5.34 mm thick.	
D 332-329	5.49 mm thick.	
D 332-330	6.48 mm thick.	
DS 333-040	Assembly of reverse speed pinions with shaft and needle bearing cages. Since July 1964.	1
D 333-7a	Intermediate reverse pinion (10 teeth, total length 72.35 mm). Until February 1961.	1
DS 333-7e	Intermediate reverse pinion, 47.2 mm long. Since July 1964.	1
DM 333-8b	Pinion for mainshaft, 3rd speed pinion with dogs (22 teeth), straight tooth entry, groove marked on face, cone end, helix angle 33° 30'.	1

NUMBER	DESCRIPTION	No. OFF
D 333-9	*Intermediate sliding reverse speed pinion (28 teeth), 29.5 mm long. Replaces type 38 mm long. Until February 1961. Replaced by DS 333-040.*	1
DS 333-9c	Intermediate reverse speed sliding pinion, total length 28.3 mm. Since July 1964.	1
DW 333-9	*Intermediate sliding reverse speed pinion, 17 teeth, diameter of teeth 72.4 mm. February 1961 - July 1964. Replaced by DS 333-040; order in addition: 1-DS 333-18a, 1-DS 333-80 (R. VI), 1-DM 334-22, 1-DM 334-53, 1-DM 334-259, 1-614.201.*	1
D 333-12	1st speed mainshaft pinion (11 teeth, 18 splines).	1
D 333-13	1st speed layshaft pinion (39 teeth). Until September 1962.	1
DW 333-13	1st speed layshaft pinion, 44.5 mm long. Since September 1962.	1
DM 333-14	*2nd speed mainshaft pinion (18 teeth), (symmetric hole entry). Until February 1961. Replaced by DM 333-14a; order in addition: 1-DS 333-040, 1-DS 333-15, 1-DS 333-80 (R. VI).*	1
DM 333-14a	2nd speed mainshaft pinion (17 teeth). Since February 1961.	1
D 333-15	*2nd and reverse speed layshaft pinion (34 teeth). Until February 1961. Replaced by DS 333-15; order in addition: 1-DS 333-040, 1-DM 333-14a, 1-DS 333-80 (R. VI).*	1

The numbers underlined indicate new parts which do not appear on the illustration.

NUMBER	DESCRIPTION	No. OFF
DM 333-15	2nd and reverse speed layshaft pinion (33 teeth) inclined tooth entry. February 1961 - September 1962.	1
DS 333-15a	2nd and reverse speed pinion. Since July 1964.	1
DW 333-15	2nd and reverse speed layshaft pinion, without hole for driving dowel. September 1962 - July 1964.	1
DS 333-16	3rd and 4th speed pinion assembly on layshaft (23 and 27 teeth) helix angle of 3rd speed pinion 33° 30'. Until September 1962.	1
DW 333-16	3rd and 4th speed pinion assembly on layshaft, without hole for driving dowel. Splined interior. Since September 1962.	1
DM 333-17a	4th speed mainshaft pinion with dogs with straight tooth entry (27 teeth), groove marked on face, cone end.	1
DM 333-18	Reverse speed mainshaft driving pinion (25 teeth). Until February 1961.	1
DM 333-18a	*Reverse speed mainshaft driving pinion (sprial teeth). February 1961 - July 1964. Replaced by DS 333-18a; order in addition: 1-DS 333-040, 1-DS 333-80 (R. VI), 1-DM 334-22, 1-DM 334-53, 1-DM 334-259, 1-614. 201.*	1
DS 333-18a	Reverse speed mainshaft driving pinion, thickness of pinion 13.2 mm. Since July 1964.	1
D 333-73	Distance piece between needle roller bearing cage of intermediate reverse speed pinion (28.15 mm long, replaces one 28.7 mm long) (R. VI). Until February 1961.	1
DM 333-73	Distance piece between needle roller bearing cage of intermediate reverse speed pinion (16.6 x 19 x 9.5) (R. VI). February 1961 - July 1964.	1
DS 333-73d	Distance piece between needle roller bearing cage and reverse speed pinion, 16.6 x 18.9 x 9, (R. VI). Since July 1964.	1
	Washer, 16 internal diameter x 26 external diameter for adjusting intermediate reverse speed pinion. Until February 1961.	As nec.
D 333-74	1.58 mm thick.	
D 333-74a	1.69 mm thick.	
D 333-74b	1.80 mm thick.	
D 333-74c	1.91 mm thick.	
D 333-74d	2.02 mm thick.	
	Washer, 16 internal diameter x 17.5 external diameter for adjusting intermediate reverse speed (R. VI). Since February 1961.	As nec.
DM 333-74	0.4 mm thick.	
DM 333-74a	0.7 mm thick.	
DM 333-74b	1 mm thick.	
DM 333-74c	1.3 mm thick.	
DM 333-74d	1.6 mm thick.	
DM 333-74e	1.9 mm thick.	
DM 333-74f	2.2 mm thick.	
DM 333-74g	2.5 mm thick.	
DM 333-74h	2.8 mm thick.	
DM 333-74i	3.1 mm thick.	
DM 333-74j	3.4 mm thick.	
DM 333-74k	3.7 mm thick.	
DM 333-74m	4 mm thick.	
DM 333-74n	4.3 mm thick.	
DM 333-74p	4.6 mm thick.	
DM 333-74q	4.9 mm thick.	
DS 333-75a	Bush for reverse speed sliding pinion, 19 x 37.5 x 30.3. Since July 1964.	1
	Eared thrust washer for stop on reverse speed sliding pinion. Until July 1964.	As nec.
DM 333-80	1.54 mm thick.	
DM 333-80a	2.02 mm thick.	
DM 333-80b	2.50 mm thick.	
DM 333-80c	2.98 mm thick.	
DM 333-80d	3.46 mm thick.	
DM 333-80e	3.94 mm thick.	
DS 333-80	Eared thrust washer for stop on reverse speed sliding pinion (R. VI). Since July 1964.	1
D 333-81	Dowel between 3rd and 4th speed layshaft pinion assembly and 2nd and reverse speed layshaft pinion (8 x 17).	
	Until April 1962.	6
	April 1962 - September 1962.	3
	Half washer between 2nd and 3rd speed mainshaft pinions:	As nec.
D 333-83	2.77 to 2.80 mm thick.	
D 333-83a	2.80 to 2.83 mm thick.	
D 333-83b	2.83 to 2.86 mm thick.	
D 333-83c	2.86 to 2.89 mm thick.	
D 333-83d	2.89 to 2.92 mm thick.	
D 333-83e	2.92 to 2.95 mm thick.	
D 333-84	Washer, 40 x 45 x 2.7 for locking half washers between 2nd and 3rd speed mainshaft pinions.	1
	Thrust washer for front layshaft ball bearing, 25 x 33:	As nec.
D 333-300	2.65 mm thick.	
D 333-301	2.69 mm thick.	
D 333-302	2.73 mm thick.	

The numbers underlined indicate new parts which do not appear in the illustration.

NUMBER	DESCRIPTION	No. OFF
501.002	Cap, 20 mm diameter for hole for reverse pinion shaft (R. I).	1
620.047	Ball bearing, 20 x 62 x 17, on rear of mainshaft (R. VI).	1
620.072	Ball thrust bearing, 16 x 30 x 9.5, for intermediate reverse pinion (R. I). Until February 1961.	2
620.081	Cage for needle roller bearing, 33 x 36 x 30, for 2nd speed mainshaft pinion (R. VI).	1
620.083	Cage for needle roller bearing, 33 x 36 x 36, for 4th speed mainshaft pinion (R. VI).	1
620.087	Cage for needle roller bearing, 16 x 19 x 18, for intermediate reverse pinion (R. VI). Until February 1961.	2
620.088	Ball bearing, double, tapered, shouldered, 25 x 62 x 67.5 x 25.4 (R. I):	
	- front end of mainshaft.	1
	- front end of bevel pinion.	1
620.094	Cage for needle roller bearing, 33 x 36 x 32.2, for 3rd speed mainshaft pinion (R. VI).	1
620.125	Cage for needle roller bearing, 16 x 19 x 20, for reverse speed sliding pinion (R. VI). Since February 1961.	2
620.126	Needle thrust bearing for reverse speed sliding pinion (16 x 32 x 2.8) (R. VI). February 1961 - July 1964.	1
	Since July 1964.	2
620.262	Cage for needle roller bearing for intermediate reverse pinion, 16 x 19 x 16 (R. VI). Since July 1964.	2
620.503	Circlip for locking bearing (R. VI).	2
620.523	Locking ring for reverse speed sliding pinion (R. I). February 1961 - July 1964.	1
620.524	Locking ring for reverse speed sliding pinion needle bearing cage, (17 x 20 x 1.2) (R. VI). February 1961 - July 1964.	2

The numbers underlined indicate new parts which do not appear on the illustration.

NUMBER	DESCRIPTION	No. OFF
D 333-303	2.77 mm thick.	
D 333-304	2.81 mm thick.	
D 333-305	2.85 mm thick.	
D 333-306	2.89 mm thick.	
D 333-307	2.93 mm thick.	
D 333-308	2.97 mm thick.	
D 333-309	3.01 mm thick.	
D 333-310	3.05 mm thick.	
D 333-311	3.09 mm thick.	
D 333-312	3.13 mm thick.	
D 333-313	3.17 mm thick.	
D 333-314	3.21 mm thick.	
D 333-315	3.25 mm thick.	
D 333-316	3.29 mm thick.	
D 333-317	3.33 mm thick.	
D 333-318	3.37 mm thick.	
D 333-319	3.41 mm thick.	
D 333-320	3.45 mm thick.	
D 333-321	3.49 mm thick.	
D 333-322	3.53 mm thick.	
D 333-323	3.57 mm thick.	
D 333-324	3.61 mm thick.	
D 333-325	3.65 mm thick.	
D 333-326	3.69 mm thick.	
D 333-327	3.73 mm thick.	
D 333-328	3.77 mm thick.	
D 333-329	3.81 mm thick.	
D 333-330	3.85 mm thick.	
D 333-331	3.89 mm thick.	
D 333-332	3.93 mm thick.	
D 333-333	3.97 mm thick.	
D 333-334	4.01 mm thick.	
D 333-335	4.05 mm thick.	
D 333-336	4.09 mm thick.	
D 333-337	4.13 mm thick.	
D 333-338	4.17 mm thick.	
D 333-339	4.21 mm thick.	
D 333-340	4.25 mm thick.	

NUMBER	DESCRIPTION	No. OFF
DM 335-05a	Synchromesh for 2nd speed. Since July 1962. Replaces earlier type.	1
DW 335-09	Synchromesh for 1st speed. Since September 1962.	1
D 335-8	Sliding collar operating meshing plungers, width 10.5 mm. Until September 1962.	1
DM 335-8	Sliding collar operating meshing plungers, width 10 mm. Since September 1962.	1
D 335-9a	1st speed sliding collar. Until September 1962.	1
DM 335-15a	Set of 12 meshing plungers (1 pip on rear face) groove for housing collar, 10.6 mm wise. Until September 1962.	1
DM 335-15b	Set of 12 meshing plungers, groove for housing collar, 10.1 mm wide. Since September 1962.	1
DM 335-16a	Synchronising ring for 3rd and 4th speeds, straight tooth entry.	2
DW 335-18	Synchronising ring for 1st speed. Since September 1962.	1
	Synchronising ball pad, 23.2 mm long.	As nec.
DM 335-70a	5.20 mm thick.	
DM 335-70b	5.30 mm thick.	
DM 335-70c	5.40 mm thick.	

NUMBER	DESCRIPTION	No. OFF
D 335-73	Spring for synchromesh ball pad 3rd and 4th pinion.	3
	Internally toothed ring for adjusting 2nd speed synchromesh assembly:	As nec.
D 335-82	0.4 mm thick.	
D 335-82a	0.7 mm thick.	
D 335-82b	1 mm thick.	
D 335-82c	1.2 mm thick.	
D 335-82d	1.5 mm thick.	
D 335-82e	0.2 mm thick.	
D 335-82f	0.35 mm thick.	
D 335-82g	0.50 mm thick.	
D 335-82h	0.60 mm thick.	
	Ring for 1st speed synchromesh. Since September 1962.	As nec.
DW 335-88	1.3 mm thick. 1st possibility.	
DW 335-88a	1.4 mm thick. 2nd possibility.	
DS 344-01	Crown wheel and pinion, 8 x 31, assembled with rear bearing (3rd and 4th speed train, driven by dowels). Until September 1962.	1
DW 344-01	Crown wheel and pinion, 8 x 31, (3rd and 4th speed gear train, driven by splines). Since September 1962.	1
DS 344-5	Nut, hex., 24 diameter x 150 pitch, with shoulder 25 mm diameter, for locking bevel pinion.	1
D 344-90	Locking ring for rear roller bearing on bevel pinion (tooth side), internal chamfer on one face.	1
D 344-96	Locking ring for rear roller bearing on bevel pinion (shaft side), without chamfer.	1
2.493-S	Nut, hex., 7 diameter x 100 pitch, for locking grub screw (R. III).	1
2.713-S	Ball, 6.35 mm diameter for 3rd and 4th speed sliding pinion (R. VI).	3

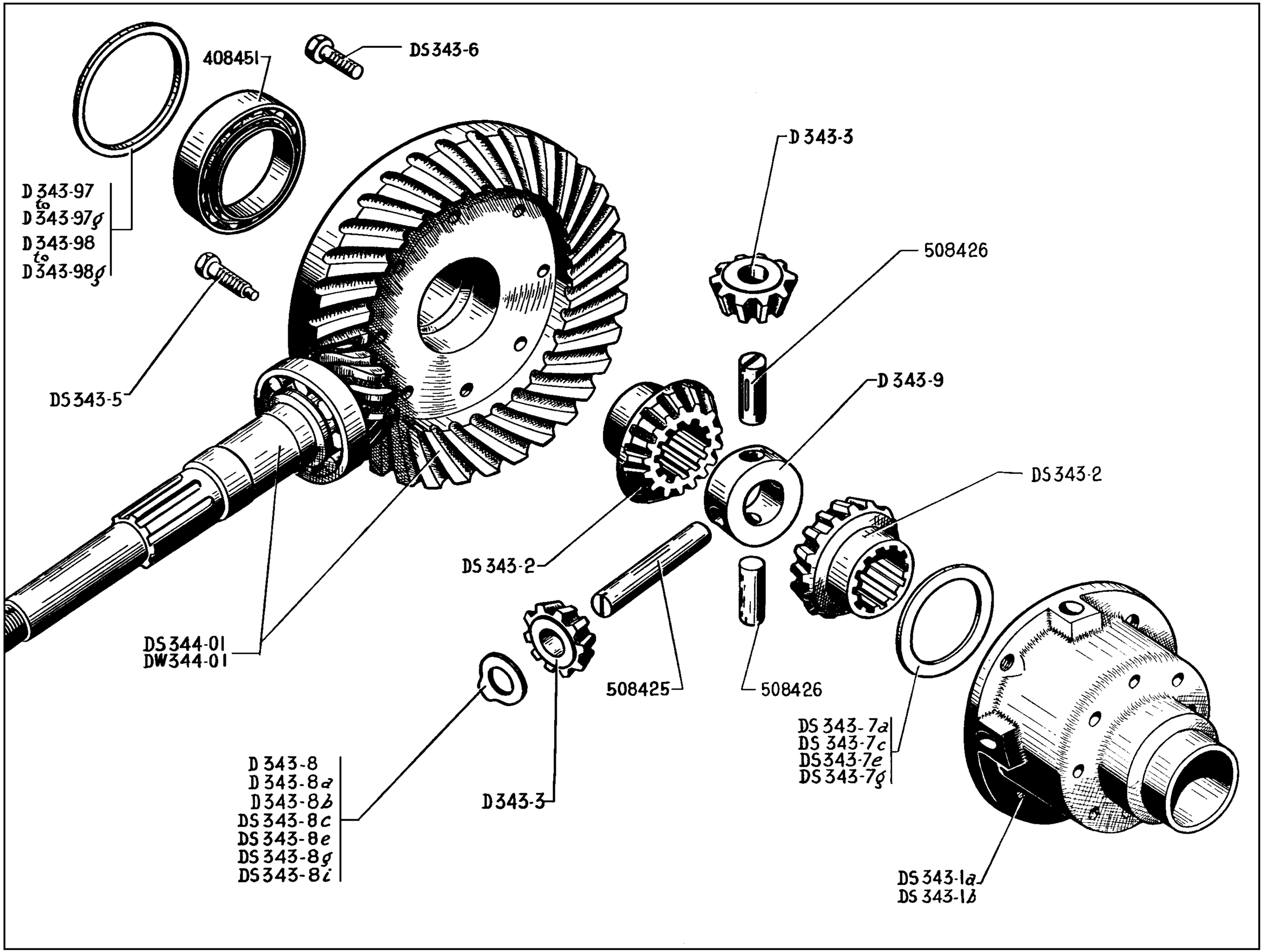
408451
DS 343-6
D 343-3
508426
D 343-97
to
D 343-97g
D 343-98
to
D 343-98g
DS 343-5
D 343-9
DS 343-2
DS 343-2
DS 344-01
DW 344-01
508425
508426
DS 343-7a
DS 343-7c
DS 343-7e
DS 343-7g
D 343-8
D 343-8a
D 343-8b
DS 343-8c
DS 343-8e
DS 343-8g
DS 343-8i
D 343-3
DS 343-1a
DS 343-1b

NUMBER	DESCRIPTION	No. OFF
DS 343-1a	*Casing for differential, distance between planet gear thrust face and crown wheel thrust face: 54 mm; between satellite thrust faces: 74.4 mm, threaded for securing crown wheel 10 mm diameter x 125 pitch. Until June 1960. Replaced by DS 343-1b; order in addition: 1-DS 343-7a to DS 343-7g (R. VI), 2-DS 343-8c to 2-DS 343-8i according to the setting.*	1
DS 343-1b	Casing for differential, distance between planet gear thrust face and crown wheel thrust face: 54 mm; between satellite thrust faces: 75.6 mm. Since June 1960.	1
DS 343-2	Planet wheel (16 teeth).	2
D 343-3	Satellite pinion, 10 teeth, total height 10.6 mm.	4
DS 343-5	Screw, hex. head, with dowel, 10 diameter x 125 pitch, x 36.5 long, for locking satellite pinion spindle.	3
DS 343-6	Screw, hex. head, 10 diameter x 125 pitch x 25 long, securing crown wheel on differential casing.	5
	Thrust washer for planet gear, 38.25 x 56 (R. VI).	As nec.
DS 343-7a	1.91 mm thick.	
DS 343-7c	2.03 mm thick.	
DS 343-7e	2.15 mm thick.	
DS 343-7g	2.27 mm thick.	

NUMBER	DESCRIPTION	No. OFF
	Fixed thrust washer for satellite pinion, 14 x 27.7. Until June 1960.	As nec.
D 343-8	1.4 mm thick.	
D 343-8a	1.2 mm thick.	
D 343-8b	1 mm thick.	
	Thrust washer for satellite pinion, 14 x 27.7. Since June 1960.	As nec.
DS 343-8c	1.71 mm thick.	
DS 343-8e	1.85 mm thick.	
DS 343-8g	1.99 mm thick.	
DS 343-8i	2.13 mm thick.	
D 343-9	Crosshead for satellite pinions, 25 x 40.5 x 20.	1
	Distance washer for roller bearing on differential casing, 74 x 82.8:	As nec.
D 343-97	2.9 mm thick.	
D 343-97a	3.3 mm thick.	
D 343-97b	3.7 mm thick.	
D 343-97c	4.1 mm thick.	
D 343-97d	4.5 mm thick.	
D 343-97e	4.9 mm thick.	
D 343-97f	5.3 mm thick.	
D 343-97g	5.7 mm thick.	

NUMBER	DESCRIPTION	No. OFF
	Washer for adjusting differential roller bearing 72 x 82.8:	As nec.
D 343-98	3 mm thick.	
D 343-98a	3.05 mm thick.	
D 343-98b	3.10 mm thick.	
D 343-98c	3.15 mm thick.	
D 343-98d	3.20 mm thick.	
D 343-98e	3.25 mm thick.	
D 343-98f	3.30 mm thick.	
D 343-98g	3.35 mm thick.	
DS 344-01	Crown wheel and pinion, 8 x 31 with rear bearing fitted. Arrangement with 3rd and 4th speed gear train driven by dowels. Until September 1962.	1
DW 344-01	Crown wheel and pinion, 8 x 31. Arrangement with 3rd and 4th speed gear train driven by splines. Since September 1962.	1
408.451	Taper roller bearing (40 x 80 x 19.5) for differential casing (R. VI).	2
508.425	Spindle for satellite pinions (14 x 109) (R. I).	1
508.426	Spindle for satellite pinions (14 x 47.5) (R. I).	2

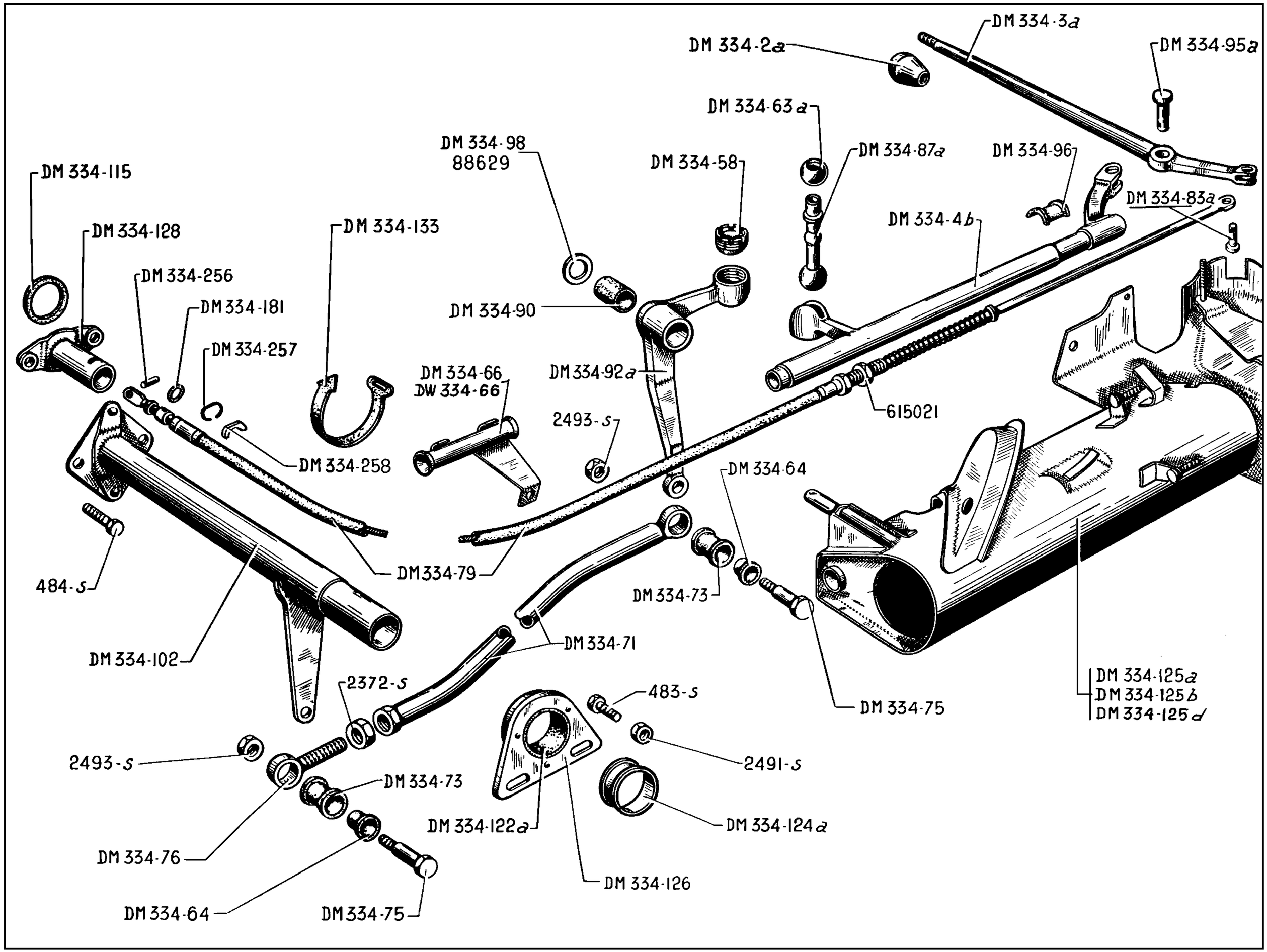
DM 334-3a
DM 334-2a
DM 334-95a
DM 334-63a
DM 334-98
88629
DM 334-58
DM 334-87a
DM 334-96
DM 334-115
DM 334-83a
DM 334-4b
DM 334-128
DM 334-133
DM 334-256
DM 334-181
DM 334-90
DM 334-257
DM 334-66
DW 334-66
DM 334-92a
615021
2493-s
DM 334-258
DM 334-64
DM 334-79
484-s
DM 334-73
DM 334-71
DM 334-102
2372-s
483-s
DM 334-75
DM 334-125a
DM 334-125b
DM 334-125d
2493-s
2491-s
DM 334-73
DM 334-122a
DM 334-124a
DM 334-76
DM 334-126
DM 334-64
DM 334-75

NUMBER	DESCRIPTION	No. OFF
	EXCEPT GERMAN ANTI-THEFT ARRANGEMENT	
DM 334-2a	Knob for gear lever on dashboard (R. VI). Until September 1964.	1
DW 334-2	Knob for gear lever on dashboard, threaded 7 x 100 (R. VI). Since September 1964.	1
DM 334-3a	Gear lever on dashboard (hole for clevis pin, 7 mm diameter). Until September 1964.	1
DW 334-3	Gear lever on dashboard, threaded 7 x 100. Since September 1964.	1
DM 334-4b	Shaft for gear change control with fork end and lever, dashboard side (hole for clevis pin, 7 mm diameter). Until September 1964.	1
DW 334-4	Shaft for gear change control, with fork end and lever, (hole for clevis pin 7 mm diameter). Since September 1964.	1
DM 334-58	Slotted ball joint nut for gear change return lever.	2
DM 334-63a	Ball joint for return lever of gear change control.	1
DM 334-64	Shouldered sleeve, rilsan, 10 x 12 x 17 x 7.5, securing control rod (R. VI).	4
DM 334-66	Guide for gear change control cable. Until September 1962.	1
DW 334-66	Guide for gear change control cable. Since September 1962.	1
DM 334-71	Rod for gear change control. Until April 1963.	1
DM 334-71a	Rod for gear change control, total length 772 mm. Since April 1963.	1

NUMBER	DESCRIPTION	No. OFF
DM 334-73	Shouldered sleeve, rubber, 12 x 16 x 19 x 14.5, securing control rod.	2
DM 334-75	Shouldered pin, 10 diameter (threaded 7 diameter x 100 pitch), securing control rod.	2
DM 334-76	*End piece, adjustable, for gear control rod (threaded 9 diameter x 125 pitch). Until April 1963. Replaced by DM 334-190; order in addition 1 DM 334-71a.*	1
DM 334-79	*Cable, gear change control, 1410 mm long (R. VI). Until September 1964. Replaced by DW 334-79.*	1
DW 334-79	Cable, gear change control, 1410 mm long (R. VI). Since September 1964.	1
DM 334-83a	Clevis pin, 5 diameter x 15.5 mm long, connecting cable to lever on dashboard.	1
DM 334-87a	Ball pin and stem for gear change control return lever.	1
DM 334-90	Bush, 12 x 16 x 25, rilsan, for gear change control return lever (R. VI).	1
DM 334-92a	Return lever, gear change control.	1
DM 334-95a	Clevis pin, 7 diameter x 32.8 mm long, for gear lever on dashboard.	1
DM 334-96	Half bearing, rilsan, for gear change control shaft (20 mm long) (R. VI).	2
DM 334-98	Washer, flexible, 12 x 22 x 0.5, for gear change control return lever (R. VI).	1
DM 334-102	Tube, gear change control, with flexible coupling and lever.	1
DM 334-115	Joint, rubber, 28.5 x 35 x 2, between flange and support for fork shaft levers.	1

NUMBER	DESCRIPTION	No. OFF
DM 334-122a	Collar, rubber, 31.5 x 40.25 x 10, for control tube bearing.	1
DM 334-124a	Shouldered sleeve, 29 x 31.5 x 33.4 x 12, for control tube bush (R. VI).	1
DM 334-125a	Bracket, gear change control, on dashboard. EXCEPT AMBULANCE. Until June 1960.	1
DM 334-125b	*Bracket, gear change control, on dashboard. AMBULANCE. June 1960 - December 1962. Replaced by DM 334-125d.*	1
DM 334-125d	Bracket, gear change control, on dashboard (3 grooves on width). December 1962 - September 1964.	1
DV 334-125	Bracket, gear change control, on dashboard. Since July 1965.	1
DW 334-125a	Bracket, gear change control, on dashboard. September 1964 - July 1965.	1
DM 334-126	Bushed bearing for gear control tube.	1
DM 334-128	Coupling flange, between flexible plate and support for levers of fork shafts.	1
DM 334-133	Strap, rubber, securing gear change control cable.	1
DS 334-181	*Ring seal, 10.5 x 15.9 x 2.7, on end piece of cable sheath (R. VI). Replaced by 4.978-S.*	1
DM 334-190	Sleeve, adjustable, for rod for gear change control (threaded 9 x 125, with hole in centre of thread). Since April 1963.	1
DM 334-256	Cylindrical pin, 5 diameter x 13 mm long, for connecting cable to locking lever.	1
DM 334-257	Circlip for end piece of sheath, for gear change control cable.	1

The numbers underlined indicate new parts which do not appear on the illustration.

NUMBER	DESCRIPTION	No. OFF
DM 334-258	Half washer for securing end of gear change control cable sheath (R. VI).	1
483-S	Screw, hex. head, 7 diameter x 15 mm long, securing bushed bearing for tube (R. III).	2
484-S	Screw, hex. head, 7 diameter x 17.5 mm long, securing flexible coupling of gear change control (R. III).	2
2.372-S	Nut, hex., 9 diameter x 125 pitch, for adjustable end piece of control rod (R. III).	1
2.491-S	Nut, hex., 7 diameter x 100 pitch x 7 mm thick, for screws securing bushed bearing bracket supporting tube (R. III).	2
2.493-S	Nut, hex., 7 diameter x 100 pitch x 5 mm thick, for securing control rod (R. III).	2
88.629	Washer, flat, 12.5 x 20 x 1, for locking control return lever (R. I).	1
615.021	Nut, hex., 15 diameter x 150 pitch, securing shaft of gear change control (R. VI).	1

NUMBER	DESCRIPTION	No. OFF
	GERMAN ANTI-THEFT ARRANGEMENT	
	March 1962 — December 1962	
DM 334-75a	Pin, shouldered, 10 x 36, securing control rod. Threaded 6 diameter x 100 pitch (R. VI).	2
DM 334-83b	Pin, shouldered, 5 diameter x 28.65 long, connecting cable to control lever on dashboard (R. VI).	1
DM 334-125c	Housing for gear change control on dashboard.	1
DM 611-1	Anti-theft device with its brackets.	1
DM 611-10	Bracket for anti-theft device.	1
DM 611-74	Flexible distance piece for trunnion (R. VI).	1

NUMBER	DESCRIPTION	No. OFF
DM 611-75	Bracket for anti-theft mechanism.	1
DM 611-79	Return spring for anti-theft bolt (R. VI).	1
DM 611-82	Safety bolt for anti-theft device (R. VI).	1
DS 611-90	Lock barrel, with keys and nuts locking anti-theft device (R. VI).	1
DM 611-98	Bolt, only, for lock.	1
615.850	Nut, 7 diameter, snap-off head, securing reinforcement on support for control (R. VI).	2
615.851	Nut, 6 diameter, snap-off head, securing control rod (R. VI).	2
622.950	Screw, 7 diameter x 18 long, snap-off head, for connecting tube and coupling on gearbox (R. VI).	2

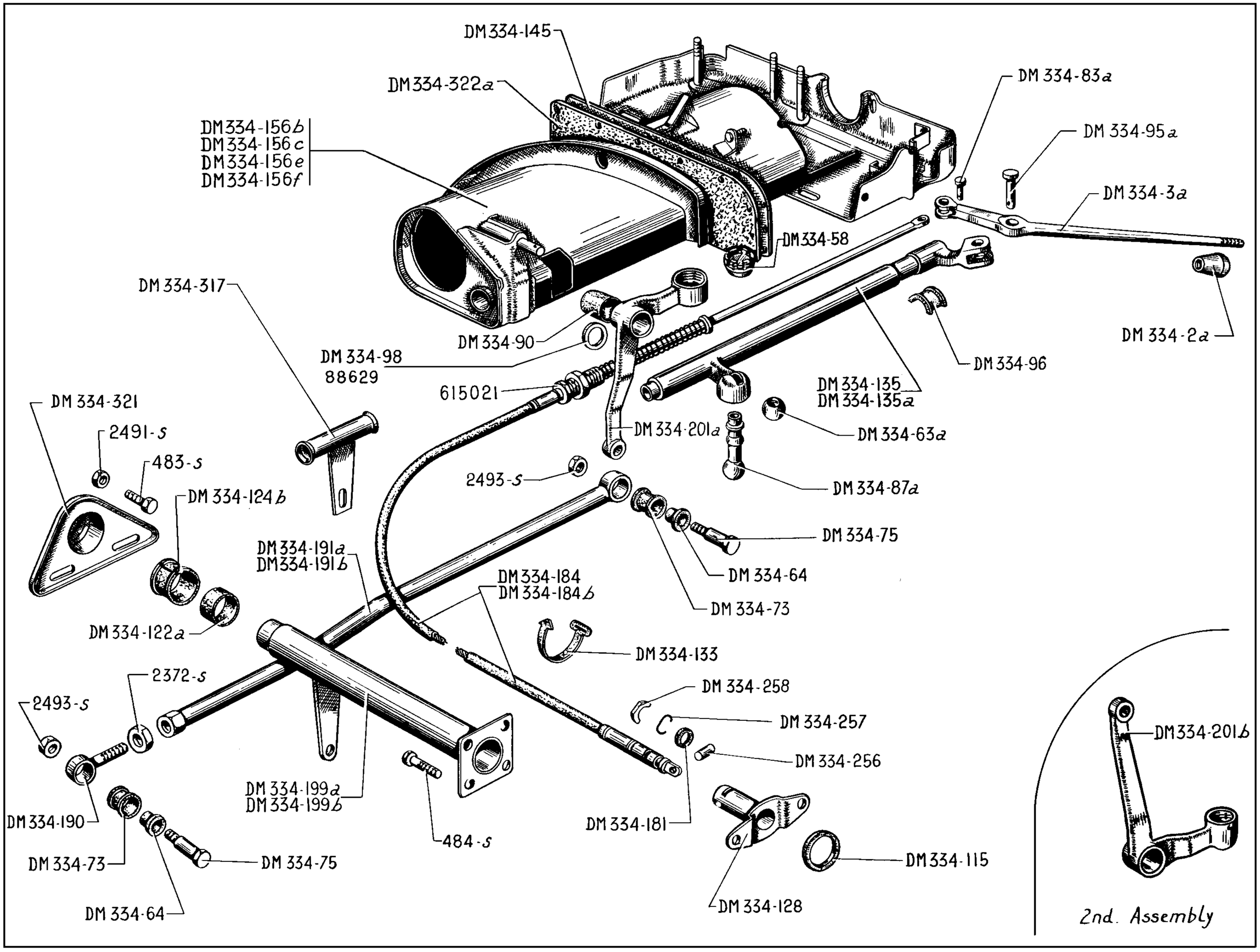
DM334-145
DM334-322a
DM334-156b
DM334-156c
DM334-156e
DM334-156f
DM 334-83a
DM 334-95a
DM 334-3a
DM334-58
DM 334-317
DM 334-90
DM 334-98
88629
615021
DM 334-2a
DM 334-96
DM 334-135
DM 334-135a
DM 334-321
2491-s
483-s
DM 334-201a
DM 334-63a
2493-s
DM 334-87a
DM 334-124b
DM 334-75
DM 334-191a
DM334-191b
DM 334-64
DM 334-184
DM 334-184b
DM 334-73
DM 334-122a
DM 334-133
2372-s
DM 334-258
2493-s
DM 334-257
DM 334-256
DM 334-199a
DM 334-199b
DM 334-190
DM 334-181
484-s
DM 334-73
DM 334-75
DM 334-115
DM 334-64
DM 334-128
DM334-201b
2nd. Assembly

NUMBER	DESCRIPTION	No. OFF
DM 334-2a	Knob for gear lever on dashboard (R. VI). Until September 1964.	1
DW 334-2	Knob for gear lever on dashboard, threaded 7 x 100 (R. VI). Since September 1964.	1
DM 334-3a	Gear lever on dashboard (hole for clevis pin, 7 mm diameter). Until September 1964.	1
DW 334-3a	Gear lever on dashboard. Since September 1964.	1
DM 334-58	Slotted ball joint nut for gear change return lever.	2
DM 334-63a	Ball joint for return lever of gear change control.	1
DM 334-64	Shouldered sleeve, rilsan, 10 x 12 x 17 x 7.5, securing control rod (R. VI).	4
DM 334-73	Shouldered sleeve, rubber, 12 x 16 x 19 x 14.5, securing control rod.	2
DM 334-75	Shouldered pin, 10 diameter (threaded 7 diameter x 100 pitch) securing control rod.	2
DM 334-83a	Clevis pin, 5 diameter x 15.5 mm long, connecting cable to lever on dashboard.	1
DM 334-87a	Ball pin and stem for gear change control return lever.	1
DM 334-90	Bush, rilsan, 12 x 16 x 25, for gear change control return lever (R. VI).	1

NUMBER	DESCRIPTION	No. OFF
DM 334-95a	Clevis pin, 7 diameter x 32.8 mm long, for gear lever on dashboard.	1
DM 334-96	Half bearing, rilsan, for gear change control shaft (20 mm long) (R. VI).	2
DM 334-98	Washer, flexible, 12 x 22 x 0.5, for gear change control return lever (R. VI).	1
DM 334-115	Joint, rubber, 28.5 x 35 x 2, between flange and support for fork shaft levers.	1
DM 334-122a	Collar, rubber, 31.5 x 40.25 x 10, for control tube bearing.	1
DM 334-124b	Shouldered sleeve, open, for control tube bush (R. VI).	1
DM 334-128	Coupling flange, between flexible plate and support for levers of fork shafts.	1
DM 334-133	Strap, rubber, securing gear change control cable.	1
DM 334-135	Gear control shaft, dashframe side with yoke and lever (hole for clevis pin 7 mm diameter). Until October 1962.	1
DM 334-135a	Gear control shaft with yoke and lever. October 1962 - September 1964.	1
DW 334-135	*Gear control shaft with yoke and lever. Since September 1964. Replaced by DJ 334-135; order in addition: 1-DJ 334-142, 1-DJ 334-257 (R. VI).*	1
DM 334-145	Back plate for sealing lining (R. VI). Since October 1962.	1

NUMBER	DESCRIPTION	No. OFF
DM 334-156b	*Bracket for gear change control on dashboard. Until September 1962. Replaced by DM 334-156f.*	1
DM 334-156c	*Bracket for gear change control on dashboard. September 1962 - October 1962. Replaced by DM 334-156f.*	1
DM 334-156e	*Bracket for gear change control on dashboard, (2 grooves on the width). October 1962 - December 1962. Replaced by DM 334-156f.*	1
DM 334-156f	Bracket for gear change control on dashboard. December 1962 - September 1964.	1
DW 334-156	Bracket for gear change control on dashboard. Since September 1964.	1
DS 334-181	*Ring seal, 10.5 x 15.9 x 2.7, on end piece of cable sheath (R. VI). Replaced by 4.978-S.*	1
DM 334-184	Cable for gear control, 1650 mm long (R. VI). Until October 1962.	1
DM 334-184a	Cable for gear control (R. VI). Since July 1965.	1
DM 334-184b	Cable for gear control, 1630 mm between centres (R. VI). October 1962 - September 1964.	1
DW 334-184	Cable for gear change control (R. VI). September 1964 - July 1965.	1
DM 334-190	End piece, adjustable, for gear control rod (threaded 9 diameter x 125 pitch).	1
DM 334-191a	Gear control rod. Until October 1962.	1
DM 334-191b	Gear control rod (total length 795 mm) (R. VI). Since October 1962.	1

The numbers underlined indicate new parts which do not appear on the illustration.

NUMBER	DESCRIPTION	No. OFF
DM 334-199a	Tube, gear change control, with flexible coupling and lever. Until October 1962.	1
DM 334-199b	Tube, gear change control, with flexible coupling and lever. Since October 1962.	1
DM 334-201a	Return lever, gear change control. Until October 1962.	1
DM 334-201b	Return lever, gear change control (R. VI). Since October 1962.	1
DM 334-256	Cylindrical pin, 5 diameter x 13 mm long, connecting cable to locking lever.	1
DM 334-257	Circlip for end piece of sheath for gear change control cable.	1

NUMBER	DESCRIPTION	No. OFF
DM 334-258	Half washer for securing end of gear change control cable sheath (R. VI).	1
DM 334-317	Guide for gear change control cable. Until October 1962.	1
DM 334-321	Bushed bearing for gear control tube.	1
DM 334-322a	Sealing strip between dashframe and gear control support (R. VI). Since October 1962.	1
483-S	Screw, hex. head, 7 diameter x 15 mm long, securing bushed bearing for tube (R. III).	2
484-S	Screw, hex. head, 7 diameter x 17.5 mm long, securing flexible coupling of gear change control (R. III).	2

NUMBER	DESCRIPTION	No. OFF
2.372-S	Nut, hex., 9 diameter x 125 pitch, for adjustable end piece of control rod.	1
2.491-S	Nut, hex., 7 diameter x 100 pitch x 7 mm thick, for screws securing bushed bearing bracket supporting tube (R. III).	2
2.493-S	Nut, hex., 7 diameter x 100 pitch x 5 mm thick securing control rod (R. III).	2
88.629	Washer, plain, 12.5 x 20 x 1, locking control return lever (R. I).	1
615.021	Nut, hex., 15 diameter x 150 pitch, securing gear control cable (R. VI).	1

NUMBER	DESCRIPTION	No. OFF
	ARRANGEMENT WITH 'TRIPODE' TRANSMISSION Since October 1964	
A 451-80	Tube, flexible, 5 x 7 x 185 for draining oil from differential shaft bearing (R. VI).	2
D 331-79	Joint for differential shaft bearing (R. VI).	2
D 371-3	Bearing for differential shaft, left-hand, 145.5 mm long.	1
D 371-3a	Bearing for differential shaft, right-hand, 135.5 mm long.	1
D 371-5	Sealing bush for roller bearing on differential shaft, 39 x 65 x 10 (R. VI).	2
D 371-92	Thrust ring for roller bearing on differential shaft, 30.2 x 38 x 10.	2
D 371-93	Special locknut, male, 74 x 150, locking roller bearing on differential shaft.	2
DS 371-94b	Shaft, only, for differential, left-hand, 6 holes 12 x 125, length of shaft 202 mm.	1
DS 371-94c	Shaft, only, for differential, right-hand, 6 holes 12 x 125, length of shaft 192 mm.	1

NUMBER	DESCRIPTION	No. OFF
D 371-95	Locknut, 7 x 100, for special male nut, locking bearing on differential shaft.	2
D 371-96	Nut, hex., 30 x 150, for differential shaft.	2
D 371-99	Oil seal washer on differential shaft, 35 diameter x 71.5 (R. VI).	2
DS 373-01	Transmission complete, front, left-hand.	1
DS 373-01a	Transmission complete, front, right-hand.	1
DS 373-7	Ball joint with triple spindle with bearing. Since May 1965.	6
DS 373-7a	*Ball joint for triple spindle with bearing. Until May 1965. Replaced by DS 373-7.*	6
DS 373-31	Transmission triple spindle.	2
DS 373-68	Stud, 12 x 125 x 52.5 mm long, length of thread 14 mm and 12.5 mm.	12
DS 373-69	Driving sleeve.	2
DS 373-71	Sealing joint between driving sleeve and closing plate (R. VI).	2
DS 373-72	Closing plate for driving sleeve.	2
DS 373-88	Sealing cover, driving sleeve side.	2
DS 373-94	Sealing joint for transmission, 108 x 118 x 16 (R. VI).	2

NUMBER	DESCRIPTION	No. OFF
DS 373-99	Sealing sleeve, rubber, for transmission, internal diameter 40 mm and 95 mm.	2
DS 451-23a	Friction plate for brake.	2
368-S	Circlip, 30 x 36 x 1.5, for triple spindles (R. III).	2
486-S	Screw, hex. head, 7 x 22.5 for securing differential shaft bearing (R. III).	8
4.737-S	Transmission greaser (R. VI).	2
10.530	Roller bearing, 30 x 72 x 19 for differential shaft (R. VI).	2
508.440	Screw, hex. head, 6 x 11, for locking nut on differential shaft (R. I).	2
602.009	Collar, securing sealing sleeve on transmission (340 mm long)(R. VI).	2
614.008	Collar, securing sealing cover on driving sleeve (580 mm long) (R. VI).	2
614.011	Collar, securing sealing cover on transmission (length 240 mm) (R. VI).	2
615.032	Nut with collar, 12 x 125 for securing brake fixing plate (R. VI).	12

The numbers underlined indicate new parts which do not appear on the illustration.

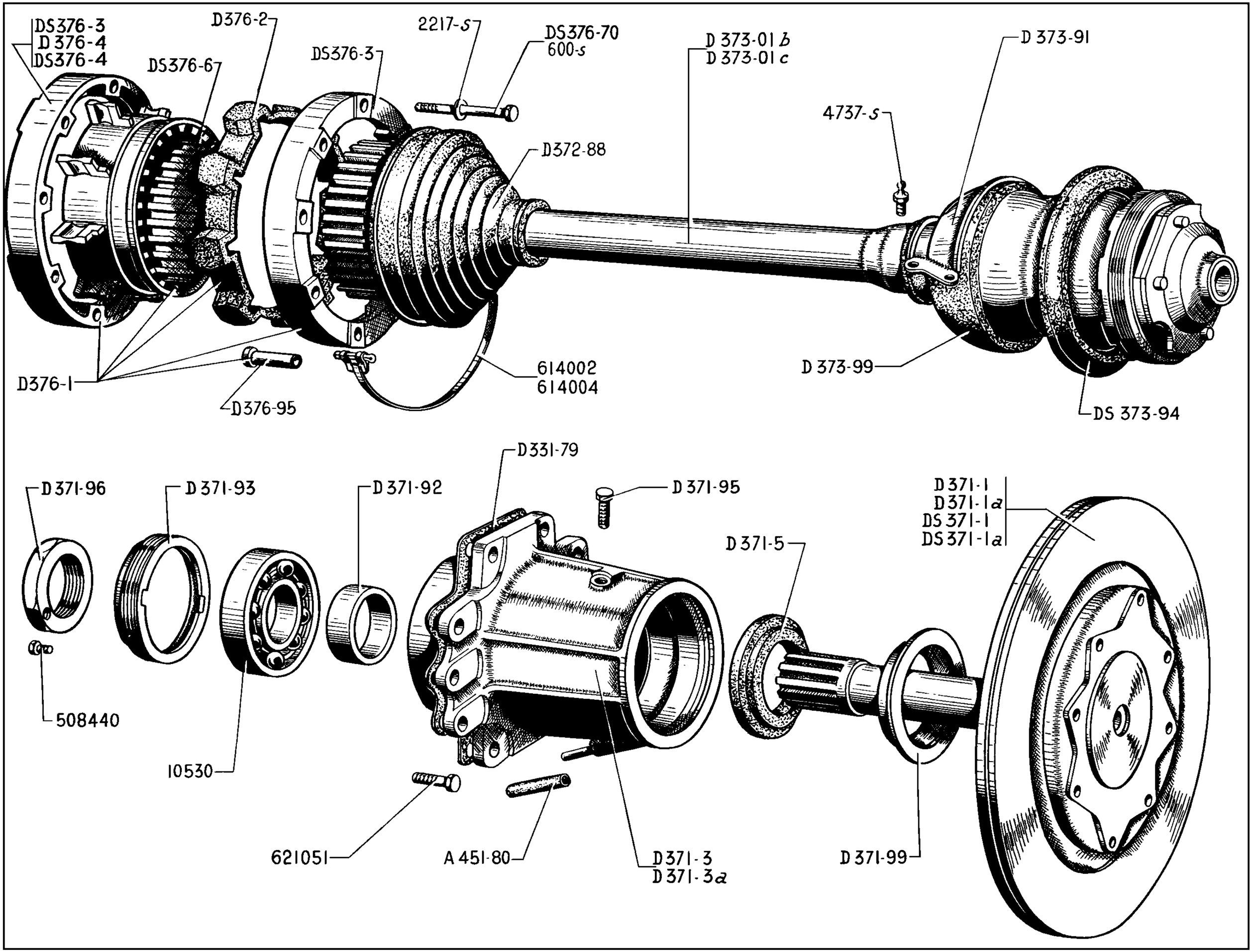
DS376-3
D 376-4
DS376-4
D376-2
DS376-6
DS376-3
2217-s
DS376-70
600-s
D 373-01 b
D 373-01 c
D 373-91
4737-s
D372-88
D376-1
D376-95
614002
614004
D 373-99
DS 373-94
D331-79
D 371-96
D 371-93
D 371-92
D 371-95
D 371-1
D 371-1a
DS 371-1
DS 371-1a
D 371-5
508440
10530
621051
A 451-80
D 371-3
D 371-3a
D 371-99

NUMBER	DESCRIPTION	No. OFF
	Until October 1964	
A 451-80	Tube, flexible, oil drain, 5 x 7 x 185, on differential shaft housing (R. VI).	2
D 331-79	Joint for differential shaft housing (R. VI).	2
D 371-1	Differential shaft, left-hand with brake friction disc, length of shaft 202 mm. Until October 1961.	1
D 371-1a	Differential shaft, right-hand with brake friction disc, length of shaft 192 mm. Until October 1961.	1
DS 371-1	Differential shaft, left-hand with brake friction disc, 8 holes 9 mm diameter, length of shaft 202 mm. Since October 1961.	1
DS 371-1a	Differential shaft, right-hand with brake friction disc, 8 holes 9 mm diameter, length of shaft 202 mm. Since October 1961.	1
D 371-3	Housing for differential shaft, left-hand, 145.5 mm long.	1
D 371-3a	Housing for differential shaft, right-hand, 135.5 mm long.	1
D 371-5	Sealing ring for differential shaft bearing, 39 x 65 x 10 (R. VI).	2
D 371-92	Thrust sleeve for differential shaft bearing, 30.2 x 38 x 10.	2
D 371-93	Ring nut, 74 diameter x 150 pitch, locking bearing cage in differential shaft housing.	2
D 371-95	Locking screw, 7 diameter x 100 pitch, securing ring nut locking bearing in differential shaft housing.	2
D 371-96	Nut, hex., 30 diameter x 150 pitch, on differential shaft.	2

NUMBER	DESCRIPTION	No. OFF
D 371-99	Oil retaining washer on differential shaft, 35 x 71.5 (R. VI).	2
D 372-88	Dust shield on driving shaft (gear-box end), internal diameter 26 and 111 mm.	2
D 373-01b	Driveshaft complete, front, left-hand (without driving dowels on plate).	1
D 373-01c	Driveshaft complete, front, right-hand (without driving dowels on plate).	1
D 373-91	*Half cover for retaining rubber cover on driveshaft. Until April 1964. Replaced by DS 373-99; order in addition: 1-602.009 (R. VI). For 2 half covers.*	4
DS 373-94	Sealing ring for driveshaft, 108 x 118 x 16 (R. VI).	2
D 373-99	*Rubber cover for driveshaft, internal diameter 40 mm and 103 mm. Until April 1964. Replaced by DS 373-99; order in addition: 1-602.009 (R. VI) and delete half cover D 373-91.*	2
DS 373-99	Rubber cover for driveshaft, internal diameter 40 mm and 95 mm. Since April 1964.	2
D 376-1	*Driving sleeve with flexible coupling 30 splines. Until October 1961. Replaced by DS 376-4; order in addition: 1-DS 376-3, 1-DS 376-6, 1-D 376-2, 8-DS 376-70.*	2
D 376-2	Rubber driving block, female, external diameter 149 mm.	2
DS 376-3	Driving sleeve, female, (differential side and wheel side), 8 holes 9 mm diameter. Since October 1961.	4

NUMBER	DESCRIPTION	No. OFF
D 376-4	*Driving sleeve, female, (differential side). external diameter 164 mm. Until October 1961. Replaced by DS 376-4; order in addition: 1-DS 376-3, 8-DS 376-70, 8-2.217-S (R. III).*	2
DS 376-4	Driving sleeve with housing for centring dowels, differential shaft side, 8 holes 9 mm diameter. For replacement of D 376-1.	2
DS 376-6	Driving sleeve, female only, with cup. Since October 1961.	2
DS 376-70	Screw, 7 diameter x 100 pitch, securing female driving sleeve, length under head 73 mm, body 8 mm diameter.	16
D 376-95	*Bush for assembling female driving sleeves, 10 mm diameter. Until October 1961. No longer supplied.*	8
486-S	Screw, hex. head, 7 x 22.5, for securing the differential shaft housing (R. III).	8
600-S	Screw, hex. head, 7 diameter x 70 long, securing driving sleeve (R. III). Until October 1961.	16
2.217-S	Washer, 9.5 x 16 x 2, securing driving sleeve (R. III). Since October 1961.	16
4.737-S	Greaser for driveshaft (R. VI).	2
10.530	Bearing, 30 x 72 x 19, for differential shaft (R. VI).	2
508.440	Screw, hex. head, 6 x 11, locking differential shaft nut (R. I).	2
602.009	Clip securing dust shield on driving shaft (340 mm long) (R. VI). Since April 1964.	2
614.002	Clip securing dust shield on driving shaft, 220 mm long (R. VI).	2
614.004	Clip securing dust shield on driving sleeve, 765 mm long (R. VI).	2
621.051	*Screw, hex. head, 7 diameter x 22.5 long, securing differential shaft housing (R. II). Replaced by 486-S (R. III).*	8
621.076	Screw, 9 x 75, for securing the female driving sleeve (R. II). Since October 1961.	16

The numbers underlined indicate new parts which do not appear on the illustration.

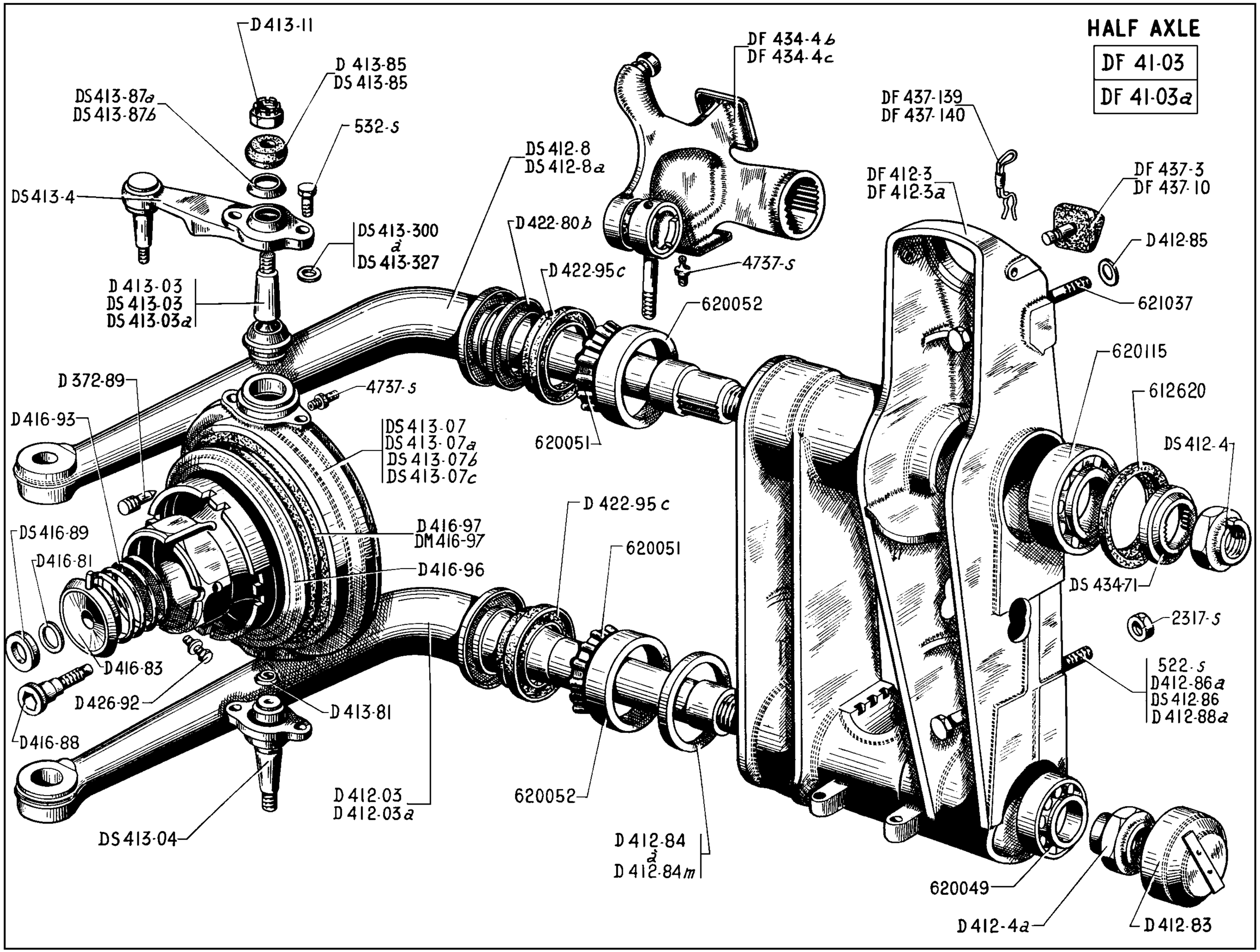
HALF AXLE
DF 41-03
DF 41-03a
D 413-11
D 413-85
DS 413-85
DS 413-87a
DS 413-87b
532-s
DS 413-4
DS 413-300 à DS 413-327
D 413-03
DS 413-03
DS 413-03a
DS 412-8
DS 412-8a
D 422-80b
D 422-95c
DF 434-4b
DF 434-4c
4737-s
620052
DF 437-139
DF 437-140
DF 412-3
DF 412-3a
DF 437-3
DF 437-10
D 412-85
621037
620115
612620
DS 412-4
DS 434-71
2317-s
522-s
D412-86a
DS 412-86
D 412-88a
D 372-89
4737-s
D416-93
DS 413-07
DS 413-07a
DS 413-07b
DS 413-07c
620051
D 422-95 c
DS 416-89
D416-81
D 416-97
DM 416-97
D 416-96
620051
D 416-83
D 426-92
D 413-81
D416-88
D 412-03
D 412-03a
620052
DS 413-04
D 412-84 à D 412-84m
620049
D 412-4a
D 412-83

NUMBER	DESCRIPTION	No. OFF
DF 41-03	*Half axle, front L.H. (without swivel or driveshaft). Until October 1964. Replaced by DF 41-03d.*	1
DF 41-03a	*Half axle, front R.H. (without swivel or driveshaft). Until October 1964. Replaced by DF 41-03e.*	1
DF 41-03d	Half axle, front L. H. (without swivel or driveshaft), for fitting with wide tread tyres. October 1964-July 1965.	1
DF 41-03e	Half axle, front R. H. (without swivel or driveshaft), for fitting with wide tread tyres. October 1964-July 1965.	1
DF 41-03h	Half axle, front L. H. (without swivel or driveshaft) 1 flat on the upper part of the arm bracket. Since July 1965.	1
DF 41-03i	Half, axle, front R. H. (without swivel or driveshaft) 1 flat on the upper part of the arm bracket. Since July 1965.	1
D 372-89	Screw, with dowel, 7 diameter x 100 pitch x 18.8 mm long, for locking stub axle nut.	2
D 412-03	Lower link arm, front L. H. seating for bearing 30 mm (without cup).	1
D 412-03a	Lower link arm, front R. H. seating for bearing 30 mm (without cup).	1
DF 412-3	*Bracket for front link arm, L.H. (1 hole 12.5 mm diameter for rubber buffer). Until October 1964. Replaced by DF 412-3b.*	1
DF 412-3a	*Bracket for front link arm, R.H. (1 hole 12.5 mm diameter for rubber buffer). Until October 1964. Replaced by DF 412-3c.*	1
DF 412-3b	Bracket for front link arm, L. H. (1 hole 12.5 mm diameter for rubber buffer) arrangement with wide tread tyres. October 1964 - July 1965.	1
DF 412-3c	Bracket for front link arm, R. H. (1 hole 12.5 mm diameter for rubber buffer) arrangement with wide tread tyres. October 1964 - July 1965.	1
DVF 412-3	Bracket for front link arm, left-hand, (2 holes 12.5 mm diameter for buffer, 2 holes 7.15 mm diameter x 46.9 mm centres for securing corrector bracket). Since July 1965.	1
DVF 412-3a	Bracket for front link arm, right-hand, (2 holes 12.5 mm diameter for securing buffer). Since July 1965.	1

NUMBER	DESCRIPTION	No. OFF
D 412-4a	Nut, hex., 27 diameter x 150 pitch, for locking lower front link arm, 22.6 mm thick.	2
DS 412-4	Nut, hex., 27 diameter x 150 pitch, for locking upper front link arm (46 mm across flats).	2
DS 412-8	Upper link arm, front, L. H. seating for bearing 40 mm (without cup).	1
DS 412-8a	Upper link arm, front, R. H. seating for bearing 40 mm (without cup).	1
D 412-83	Cap, sheet metal, for bearing on lower arm, 62.1 mm external diameter.	2
	Washer, 60 x 71.5 for adjusting caster angle on lower arms.	As nec.
D 412-84	4.6 mm thick.	
D 412-84a	4.8 mm thick.	
D 412-84b	5 mm thick.	
D 412-84c	5.2 mm thick.	
D 412-84d	5.4 mm thick.	
D 412-84e	5.6 mm thick.	
D 412-84f	5.8 mm thick.	
D 412-84g	6 mm thick.	
D 412-84h	6.2 mm thick.	
D 412-84j	6.4 mm thick.	
D 412-84k	6.6 mm thick.	
D 412-841	6.8 mm thick.	
D 412-84m	7 mm thick.	
D 412-85	Washer, 12 mm diameter for upper bolt on axle arm bracket.	2
D 412-86a	Screw, round head, 14 diameter x 150 pitch x 104 mm long, securing lower end of rear part of link arm bracket. Until October 1959.	2
DS 412-86	Screw, splined, round head, 14 diameter x 150 pitch x 98 mm long securing lower end of rear part of link arm bracket. Since October 1959.	2
D 412-88a	Screw, hex. head, 14 diameter x 150 pitch x 78.5 mm long, securing lower end of front part of link arm bracket.	2
D 413-03	*Ball pin assembly, upper, for swivel, with seating, bush and washers. Until October 1959. Replaced by DS 413-03c; order in addition: 1-DS 413-4a, 1-DS 413-85, 1-DS 413-87a (R. VI), 1-615.751 (R. VI), 1-615.752(R. VI).*	2

NUMBER	DESCRIPTION	No. OFF
DS 413-03	*Ball pin assembly, upper, for swivel, (with 2 seatings). October 1959 - October 1963. Replaced by DS 413-03b; order in addition: 1-615.752 (R. VI).*	2
DS 413-03a	*Ball pin assembly, upper, for swivel, (2 seatings, 1 distance piece) for replacement of D 413-03. Until October 1963. Replaced by DS 413-03c; order in addition: 1-615.752 (R. VI).*	2
DS 413-03b	Ball pin assembly, upper, for swivel (with 2 seatings), without pin hole. Since October 1963.	2
DS 413-03c	Ball pin assembly, upper, for swivel (with 2 seatings and 1 distance piece), for replacement of D 413-03, without pin hole. Since October 1963.	2
DS 413-04	*Ball pin assembly, lower, for front swivel, with seating and swivelling flange (seat diameter 36.3 mm). Until October 1963. Replaced by DS 413-04a; order in addition: 1-615.752 (R. VI).*	2
DS 413-04a	Ball pin assembly, lower, for front swivel, with seating and swivelling flange (seat diameter 36.3 mm), without pin hole. Since October 1963.	2
DS 413-07	*Swivel, left-hand (with coupling lever flange 22 mm thick). October 1959 - June 1962. Replaces earlier type; order in addition: 1-DS 413-85, 1-DS 413-87a (R. VI). Replaced by DS 413-07d; order in addition: 1-615.751 (R. VI), 1-615-752 (R. VI).*	1
DS 413-07a	*Swivel, right-hand (with coupling lever, flange 22 mm thick). October 1959 - June 1962. Replaces earlier type; order in addition: 1-DS 413-85, 1-DS 413-87a (R. VI). Replaced by DS 413-07e; order in addition: 1-615.751 (R. VI), 1-615.752 (R. VI).*	1

The numbers underlined indicate new parts which do not appear on the illustration.

NUMBER	DESCRIPTION	No. OFF
DS 413-07b	*Swivel, left-hand, with hub (greaser for lower swivel). June 1962 - October 1963. Replaced by DS 413-07d; order in addition: 1-615.751 (R. VI), 1-615.752 (R. VI).*	1
DS 413-07c	*Swivel, right-hand, with hub (greaser for lower swivel). June 1962 - October 1963. Replaced by DS 413-07e; order in addition: 1-615.751 (R. VI), 1-615.752 (R. VI).*	1
DS 413-07d	Swivel, left-hand, with hub (greaser for lower swivel). Upper and lower ball pin without pin hole. Since October 1963.	1
DS 413-07e	Swivel, right-hand, with hub (greaser for lower swivel). Upper and lower ball pin without pin hole. Since October 1963.	1
DS 413-4	*Coupling lever for swivel with ball pin (flange 22 mm thick). October 1959 - October 1963. Replaces earlier type; order in addition: 1-DS 413-03a, 1-DS 413-85, 1-DS 413-87a (R. VI). Replaced by DS 413-4a; order in addition: 1-615.751 (R. VI).*	2
DS 413-4a	Coupling lever for swivel with ball pin, (flange 22 mm thick), without pin hole. Since October 1963.	2
D 413-11	Nut, hex., castellated, 16 diameter x 150 pitch, for front swivel ball pin (R. VI). Until October 1963.	4
D 413-81	Spring for lower swivel ball pin, 25.5 mm external diameter.	2
D 413-85	Buffer, rubber, for upper and lower front swivel ball pin, 21.5 mm internal diameter x 13 mm thick.	4
	- Lower. Since October 1959.	2
DS 413-85	Buffer, rubber, for upper swivel ball pin, 21.5 mm internal diameter x 10.5 mm thick. Since October 1959.	2
DS 413-87a	Articulation cup, upper for swivel, 9 mm thick (R. VI).	2
DS 413-87b	Articulation cup, lower for swivel, 7.5 mm thick (R. VI).	2
	Washer, for adjusting upper and lower swivel ball pins, 9.5 x 14.5:	As nec.
DS 413-300	1.23 mm thick.	
DS 413-301	1.27 mm thick.	
DS 413-302	1.31 mm thick.	
DS 413-303	1.35 mm thick.	
DS 413-304	1.39 mm thick.	
DS 413-305	1.43 mm thick.	
DS 413-306	1.47 mm thick.	
DS 413-307	1.51 mm thick.	
DS 413-308	1.55 mm thick.	
DS 413-309	1.59 mm thick.	
DS 413-310	1.63 mm thick.	
DS 413-311	1.67 mm thick.	
DS 413-312	1.71 mm thick.	
DS 413-313	1.75 mm thick.	
DS 413-314	1.79 mm thick.	
DS 413-315	1.83 mm thick.	
DS 413-316	1.87 mm thick.	
DS 413-317	1.91 mm thick.	
DS 413-318	1.95 mm thick.	
DS 413-319	1.99 mm thick.	
DS 413-320	2.03 mm thick.	
DS 413-321	2.07 mm thick.	
DS 413-322	2.11 mm thick.	
DS 413-323	2.15 mm thick.	
DS 413-324	2.19 mm thick.	
DS 413-325	2.23 mm thick.	
DS 413-326	2.27 mm thick.	
DS 413-327	2.31 mm thick.	
D 416-81	Washer, 21 x 30 x 3, for retaining screw securing wheel (R. VI).	2
D 416-83	Cone for locking wheel on hub, threaded 18 diameter x 150 pitch (R. VI).	2
D 416-88	Screw, securing wheel, 18 diameter x 150 pitch x 63 mm long (R. VI).	2
DS 416-89	Thrust washer, 23.5 x 44 x 6.4, for wheel screw (R. VI).	2
D 416-93	Spring for cone locking wheel on hub 59 mm external diameter.	2
D 416-96	Deflector for ring seal on front swivel, 127 x 168.	4
D 416-97	*Ring seal on front swivel, 129 x 164 x 13 (R. VI). Until September 1962. Replaced by DM 416-97.*	4
DM 416-97	Ring seal on front swivel, 129 x 164 x 13 with rubber lip (R. VI). Since September 1962.	4
D 422-80b	Cup for oil on link arm.	4
D 422-95c	Oil seal on upper and lower link arm (54 x 72 x 12.5) (R. VI).	4
D 426-92	Dowel for positioning wheel (R. VI).	2
DF 434-4b	Control lever for front suspension, L.H. without flexible thrust block (with greaser).	
DF 434-4c	Control lever for front suspension, R.H. without flexible thrust block (with greaser).	1
DS 434-71	Distance piece for front suspension lever on upper link arm, 38 x 54 x 10.25 (R. VI).	2
DF 437-3	Rubber rebound buffer, for front link arms, 33 mm thick with pin 12.5 mm diameter.	2
DF 437-10	Rubber anti-rebound buffer, for front link arms, 27 mm thick with pin 12.5 mm diameter.	2
DF 437-139	Clip securing anti-rebound buffer on front link arms, Wire 2.8 mm dia.	2
DF 437-140	Clip securing rebound buffer on front link arm (with hook).	2
522-S	Screw, hex. head, 14 diameter x 150 pitch x 65 mm long, for securing centre of link arm bracket (R. III).	4
532-S	Screw, hex. head, 9 diameter x 125 pitch x 28 mm long, securing coupling lever and swivel flange (R. III).	8
2.317-S	Nut, hex., 14 diameter x 150 pitch, for bottom of link arm bracket (R. III).	2
4.737-S	Greaser (R. VI).	
	- on front swivel.	2
	- for suspension control lever. Since June 1961.	2
	- for lower swivel. Since June 1962.	2
612.620	Oil seal on upper link arm (54 x 72 x 5) (R. VI).	2
615.752	Nut, "Nylstop", 16 x 150, for swivel ball pin (R. VI). Since October 1963.	4
620.049	Bearing, lower link arm (30 x 62 x 21.5) (R. VI).	2
620.051	Cage with 14 taper rollers for upper and lower front link arms (R. VI).	4
620.052	Outer ring for taper roller bearings on upper and lower front axle arm (19 x 72) (R. VI).	4
620.115	Roller bearings on upper arm (40 x 72 x 21.25) (R. VI).	2
621.037	Screw, 12 diameter x 125 pitch x 89 mm long securing upper axle support arm (R. II).	2

The numbers underlined indicate new parts which do not appear on the illustration.

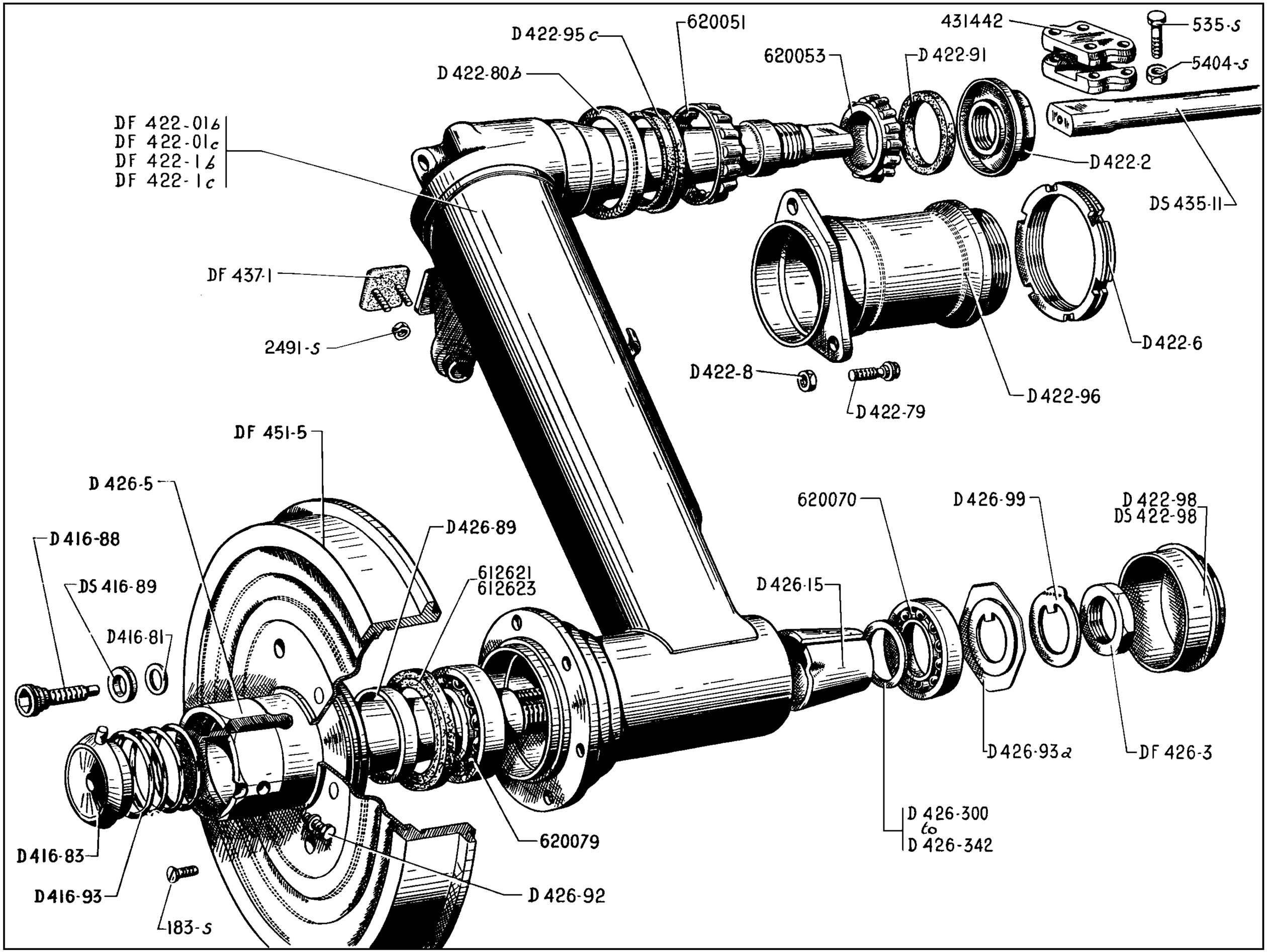
D 422-95 c
620051
431442
535-s
620053
D 422-91
5404-s
D 422-80b
DF 422-01b
DF 422-01c
DF 422-1b
DF 422-1c
D 422-2
DS 435-11
DF 437-1
2491-s
D 422-6
D 422-8
D 422-96
D 422-79
DF 451-5
D 426-5
620070
D 426-99
D 422-98
DS 422-98
D 416-88
D 426-89
DS 416-89
612621
612623
D 426-15
D416-81
D 426-93a
DF 426-3
D 426-300
to
D 426-342
620079
D416-83
D 426-92
D416-93
183-s

NUMBER	DESCRIPTION	No. OFF
D 416-81	Washer, 21 x 30 x 3, for retaining screw, securing wheel (R. VI).	2
D 416-83	Cone for locking wheel on hub, threaded 18 diameter x 150 pitch (R. VI).	2
D 416-88	Screw, securing wheel 18 diameter x 150 pitch x 63 mm long (R. VI).	2
DS 416-89	Thrust washer, 23.5 x 44 x 6.4, for wheel screw (R. VI).	2
D 416-93	Spring for cone locking wheel on hub.	2
DF 422-01b	Link arm, rear, left-hand complete with brake (arrangement with 63 mm diameter cap for stub bearing). Since May 1960. Replaces earlier type.	1
DF 422-01c	Link arm, rear, right-hand complete with brake (arrangement with 63 mm diameter cap for stub bearing). Since May 1960. Replaces earlier type.	1
DF 422-1b	*Link arm, rear, left-hand only (with thrust plates), arrangement with 63 mm diameter bearing cap. Since May 1960. Replaces earlier type; order in addition: 1-DS 422-98, 1-612.623 (R. VI). Replaced by DVF 412-1b.*	1
DF 422-1c	*Link arm, rear, right-hand only (with thrust plates), arrangement with 63 mm diameter bearing cap. Since May 1960. Replaces earlier type; order in addition: 1-DS 422-98, 1-612.623 (R. VI). Replaced by DVF 412-1c.*	1

NUMBER	DESCRIPTION	No. OFF
D 422-2	Nut, hex., 30 diameter x 150 pitch, with cup for rear link arm bearing.	2
D 422-6	Ring nut, 6 slots, 66 diameter x 150 pitch, securing link arm (inner end).	2
D 422-8	Nut, hex., with collar, 9 diameter x 125 pitch, securing rear link arm (outer end).	6
D 422-79	Screw, round head, 9 diameter x 22 long, securing bearing housing.	6
D 422-80b	Cap for link arm sealing ring.	2
D 422-91	Sealing ring, rubber, 54 x 62 x 4, for rear link arm bearing housing.	2
D 422-95c	Sealing ring, 54 x 72 x 12.5, for bearing housing of rear link arm (outer end) (R. VI).	2
D 422-96	Bearing housing for rear link arm bearing shaft (diameter of housing 66 mm).	2
D 422-98	Cap for rear stub axle housing, 62 mm diameter. Until May 1960.	2
DS 422-98	Cap for rear stub axle housing, 63 mm diameter. Since May 1960.	2
DF 426-3	Nut, hex., 25 diameter x 150 pitch x 10.5 mm thick, securing rear stub axle.	2
D 426-5	Stub axle, rear, with centring dowels.	2
D 426-15	Distance piece, tapered, for bearing on stub axle, 72.78 mm long.	2
D 426-89	Spacing ring for stub axle bearing (brake drum end) 40.25 x 58 x 10.	2

NUMBER	DESCRIPTION	No. OFF
D 426-92	Dowel for positioning wheel (R. VI).	2
D 426-93a	Spacing ring for stub axle bearing (inner end) 25 x 58 x 3.5.	2
D 426-99	Lockwasher, 25 mm diameter for nut securing rear stub axle.	2
	Washer for adjusting bearing on rear stub axle, 25.1 x 31.8 (R. VI)	As nec.
D 426-300	1.98 to 2.02 mm thick.	
D 426-301	2.02 to 2.06 mm thick.	
D 426-302	2.06 to 2.10 mm thick.	
D 426-303	2.10 to 2.14 mm thick.	
D 426-304	2.14 to 2.18 mm thick.	
D 426-305	2.18 to 2.22 mm thick.	
D 426-306	2.22 to 2.26 mm thick.	
D 426-307	2.26 to 2.30 mm thick.	
D 426-308	2.30 to 2.34 mm thick.	
D 426-309	2.34 to 2.38 mm thick.	
D 426-310	2.38 to 2.42 mm thick.	
D 426-311	2.42 to 2.46 mm thick.	
D 426-312	2.46 to 2.50 mm thick.	
D 426-313	2.50 to 2.54 mm thick.	
D 426-314	2.54 to 2.58 mm thick.	
D 426-315	2.58 to 2.62 mm thick.	
D 426-316	2.62 to 2.66 mm thick.	
D 426-317	2.66 to 2.70 mm thick.	
D 426-318	2.70 to 2.74 mm thick.	
D 426-319	2.74 to 2.78 mm thick.	
D 426-320	2.78 to 2.82 mm thick.	
D 426-321	2.82 to 2.86 mm thick.	

NUMBER	DESCRIPTION	No. OFF
D 426-322	2.86 to 2.90 mm thick.	
D 426-323	2.90 to 2.94 mm thick.	
D 426-324	2.94 to 2.98 mm thick.	
D 426-325	2.98 to 3.02 mm thick.	
D 426-326	3.02 to 3.06 mm thick.	
D 426-327	3.06 to 3.10 mm thick.	
D 426-328	3.10 to 3.14 mm thick.	
D 426-329	3.14 to 3.18 mm thick.	
D 426-330	3.18 to 3.22 mm thick.	
D 426-331	3.22 to 3.26 mm thick.	
D 426-332	3.26 to 3.30 mm thick.	
D 426-333	3.30 to 3.34 mm thick.	
D 426-334	3.34 to 3.38 mm thick.	
D 426-335	3.38 to 3.42 mm thick.	
D 426-336	3.42 to 3.46 mm thick.	
D 426-337	3.46 to 3.50 mm thick.	
D 426-338	3.50 to 3.54 mm thick.	
D 426-339	3.54 to 3.58 mm thick.	
D 426-340	3.58 to 3.62 mm thick.	
D 426-341	3.62 to 3.66 mm thick.	
D 426-342	3.66 to 3.70 mm thick.	

NUMBER	DESCRIPTION	No. OFF
DS 435-11	Anti-roll bar, rear, 481 mm long x 17 mm diameter.	1
DF 437-1	Rebound buffer (rubber), 54 x 54, with 2 studs 40 mm between centres.	4
DF 451-5	Brake drum, rear, external diameter 305 mm (with fins).	2
183-S	Screw, raised head countersunk, 5 diameter x 10 mm long, securing rear brake drum (R. III).	4
535-S	Screw, 12 diameter x 55 mm long, securing clamp on rear torsion bar (R. III).	8
2.491-S	Nut, hex., 7 diameter x 100 pitch, securing rebound buffer (R. III).	4
5.404-S	Nut, hex., 12 diameter x 125 pitch, securing coupling flange of torsion bar (R. VI).	8

NUMBER	DESCRIPTION	No. OFF
431.442	Clamp for rear torsion bar, 29 and 42 between hole centres (R. II).	4
612.621	Oil seal, 58 x 80 x 5, for rear stub axle bearing (R. VI). Until May 1960.	2
612.623	Oil seal, 58 x 81.2 x 5, for rear stub axle bearing (R. VI). Since May 1960.	2
620.051	Cage with 14 taper rollers on link arm (outer end) (R. VI).	2
620.053	Taper roller bearing (without outer ring), 30 mm internal diameter on link arm (inner end) (R. VI).	2
620.070	Thrust bearing on rear stub axle (inner end) (25 x 62 x 17) (R. II).	2
620.079	Thrust bearing on rear stub axle (brake drum end) (40 x 80 x 18) (R. II).	2

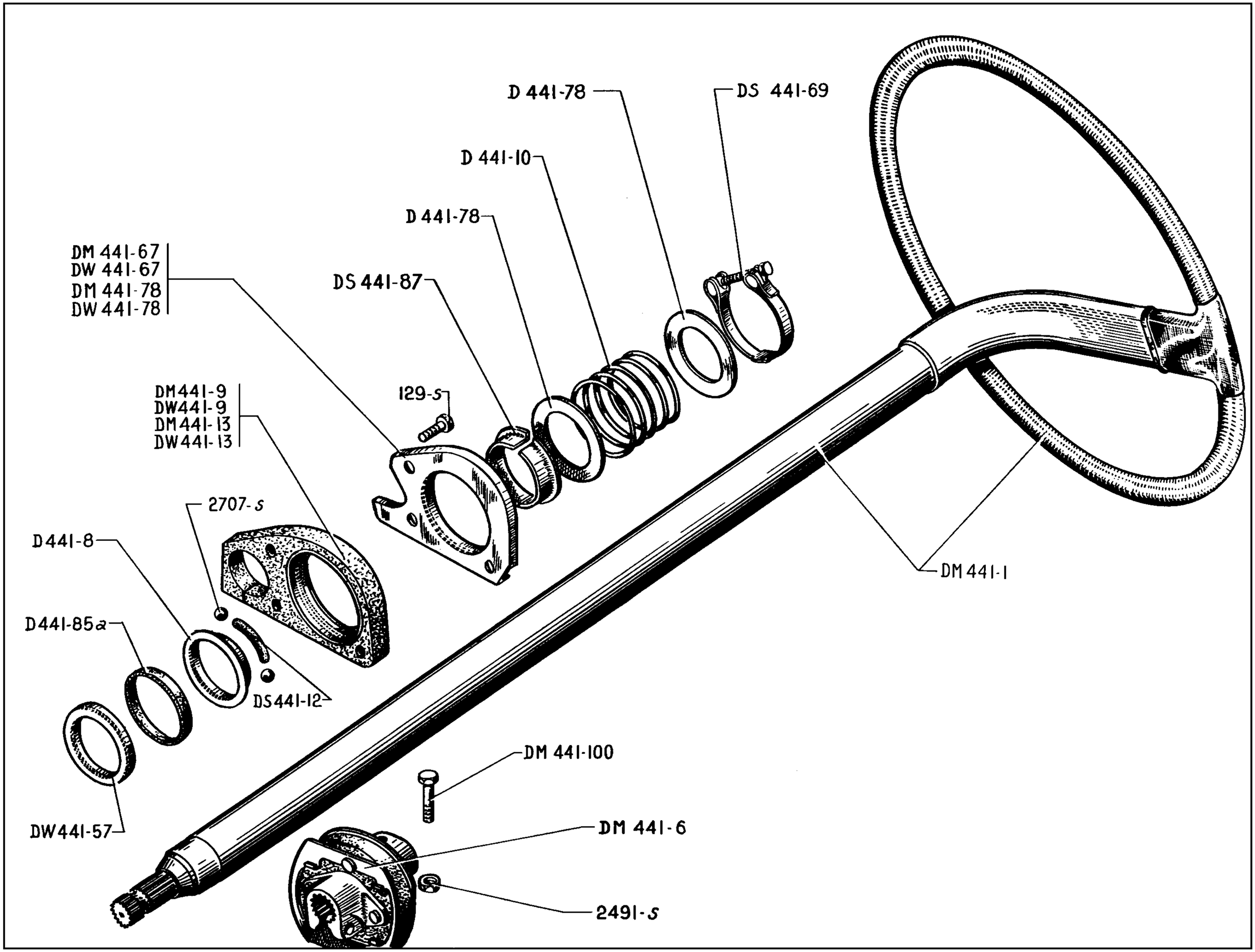
D 441-78
DS 441-69
D 441-10
D 441-78
DM 441-67
DW 441-67
DM 441-78
DW 441-78
DS 441-87
DM441-9
DW441-9
DM441-13
DW441-13
129-s
2707-s
D441-8
D441-85a
DS441-12
DM 441-1
DM 441-100
DW441-57
DM 441-6
2491-s

NUMBER	DESCRIPTION	No. OFF
DM 441-1	*Steering wheel and steering column, (ivory). Until September 1964. Replaced by DM 441-1a.*	1
DM 441-1c	Steering wheel and steering column, (black). Since September 1964.	1
DM 441-6	Coupling for steering, flexible.	1
D 441-8	Bush, inner, for ball bearing in steering column bracket, 43.6 x 55 x 11.	1
DM 441-9	Bush, outer, for ball bearing on steering column bracket and gear change control shaft. Left-hand steering. Until September 1962.	1
DW 441-9	Outer race of ball bearing on bracket for steering column. Left-hand steering. Since September 1962.	1
D 441-10	Spring, thrust, for bush of steering column bracket, 41 mm internal diameter.	1
DS 441-12	Segment, nylon, for spacing balls in steering column bracket bearing 5.5 mm diameter (R. VI).	3

NUMBER	DESCRIPTION	No. OFF
DM 441-13	Bush, outer, for ball bearing on steering column bracket and gear change control shaft. Right-hand steering. Until September 1962.	1
DW 441-13	Outer race of ball bearing on bracket for steering column. Right-hand steering. Since September 1962.	1
DW 441-57	Cup retaining felt for steering column bracket bearing, external diameter 56.8 mm, 4 mm thick. Since September 1962.	1
DS 441-66	Screw, 5 x 22, for clip adjusting spring on steering column bracket (R. VI).	1
DM 441-67	Locking plate for bearing bush, left-hand steering. Until September 1962.	1
DW 441-67	Locking plate for ball bearing on bracket for steering column. Since September 1962.	1
DS 441-69	Clip, adjusting, for steering column bracket spring, 40 mm internal diameter.	1
DS 441-70a	Covering for rim of steering wheel, (ivory), 12.5 mm wide (sold by the metre, 8 metres per wheel) (R. VI). Until September 1965.	As nec.
DS 441-70b	Covering for rim of steering wheel, (black), 12.5 mm wide (sold by the meter, 8 metres per wheel) (R. VI).	As nec.

NUMBER	DESCRIPTION	No. OFF
D 441-78	Thrust ring for steering column bracket spring, 40.5 x 49.	2
DM 441-78	Locking plate for bearing bush on steering column bracket. Right-hand steering. Until September 1962.	1
DW 441-78	Locking plate for ball bearing on bracket for steering column. Right-hand steering. Since September 1962.	1
D 441-85a	Sealing washer, felt, for steering column bracket bearing, 47.5 x 55.5 x 7.	1
DS 441-87	Split bush, sheet metal, on steering column bracket (39.8 x 48).	1
DM 441-100	Screw, hex. head, 7 diameter x 35 mm long, locking end piece of steering column.	2
129-S	Screw, round head, 5 diameter x 25 mm long, securing bearing locking plate (R. III).	3
2.491-S	Nut, hex., 7 diameter x 100 pitch, locking end piece of steering column (R. III).	2
2.707-S	Ball, 6 diameter for bearing in steering column bracket (R. VI).	9

The numbers underlined indicate new parts which do not appear in the illustration.

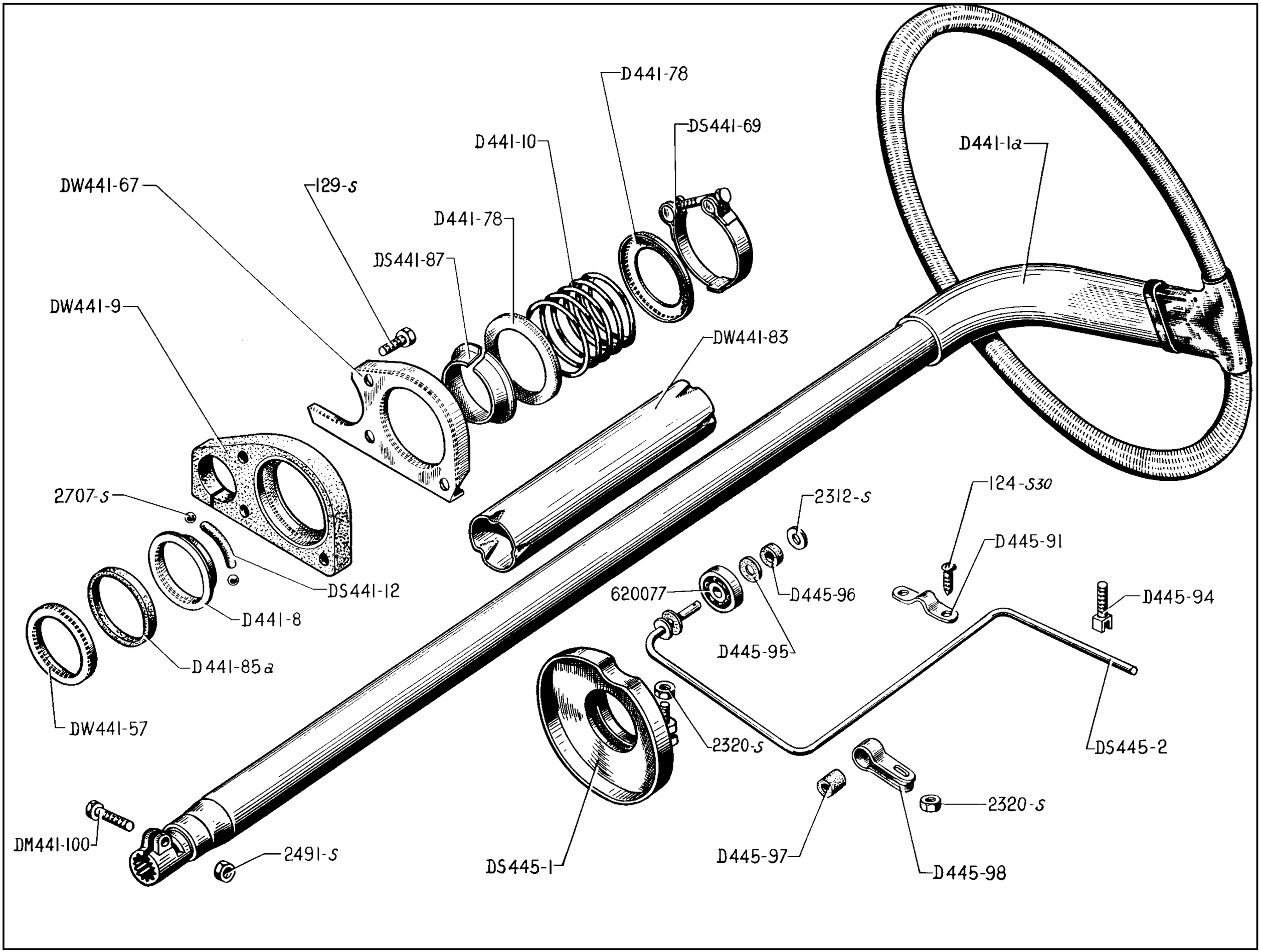
D441-78
DS441-69
D441-10
D441-1a
DW441-67
129-s
D441-78
DS441-87
DW441-9
DW441-83
2707-s
2312-s
124-S30
D445-91
DS441-12
620077
D445-96
D445-94
D441-8
D445-95
D441-85a
DW441-57
2320-s
DS445-2
2320-s
DM441-100
2491-s
DS445-1
D445-97
D445-98

NUMBER	DESCRIPTION	No. OFF
D 441-1a	*Steering wheel and column (ivory). Until September 1964. Replaced by DS 441-1.*	1
DW 441-1	Steering wheel and column (black). Since September 1964.	1
D 441-8	Bush, inner, for ball bearing in steering column bracket.	1
DW 441-9	Bush, outer, for bearing on steering column bracket. L.H. steering.	1
D 441-10	Spring, thrust, for bush of steering column bracket, 41 mm internal diameter.	1
DS 441-12	Segment, nylon, for spacing balls in steering column bracket bearing, 5.5 mm diameter (R. VI).	3
DW 441-13	Outer bush for bearing in steering column bracket. R.H. steering.	1
DW 441-57	Cup retaining felt for steering column bracket bearing, external diameter 56.8 mm, 4 mm thick.	1
DS 441-66	Screw, 5 x 22, for clip adjusting spring on steering column bracket (R. VI).	1
DW 441-67	Locking plate for ball bearing on bracket for steering column. L.H. steering.	1
DS 441-69	Clip, adjusting for steering column bracket spring, 40 mm internal diameter.	1
DS 441-70a	Covering for rim of steering wheel (ivory), 12.5 mm wide (sold by the metre, 8 metres per wheel) (R. VI).	As nec.
DS 441-70b	Covering for rim of steering wheel (black), 12.5 mm wide (sold by the metre, 8 metres per wheel) (R. VI).	As nec.

NUMBER	DESCRIPTION	No. OFF
D 441-78	Thrust ring for steering column bracket spring, 40.5 x 49.	2
DW 441-78	Stop plate for bush on bearing for steering column bracket. R.H. steering.	1
DW 441-83	Distance piece between clip and spring retaining steering column, length 410 mm.	1
D 441-85a	Sealing washer, felt, for steering column bracket bearing, 47.5 x 55.5 x 7.	1
DS 441-87	Split bush, sheet metal, on steering column bracket (39.8 x 48).	1
DM 441-100	Screw, hex. head, 7 diameter x 35 mm long, locking end piece of steering column.	1
DS 445-1	Cam for positioning steering centraliser.	1
DS 445-2	Spring for locating centring position. L.H. steering.	1
DM 445-3	Spring for locating centring position (R. VI). R.H. steering.	1
DS 445-87	Locking ring on steering column tube, 40 mm diameter. R.H. steering.	1
D 445-91	Clip securing spring locating centring position.	1
D 445-94	Screw, square head, 5 diameter x 22 long, for adjusting tension of spring locating centring position.	1

NUMBER	DESCRIPTION	No. OFF
D 445-95	Washer, for ball bearing on steering centring spring, 5 x 17 x 0.5 (R. VI).	2
D 445-96	Rubber washer for ball bearing on steering centring spring, 5 x 10 x 2.	1
D 445-97	Rubber bush on steering centring spring, 5 x 12 x 16.	1
D 445-98	Clip for rubber bush on steering centring spring, width 12 mm.	1
124-S 30	Screw, round head, 5 diameter x 12.5 long, securing clip for spring locating centring position (R. III).	2
129-S	Screw, round head, 5 diameter x 25 long, securing bearing locking plate (R. III).	3
2.312-S	Washer, plain. 5.5 x 12, for ball bearing for steering centring spring (R. III).	2
2.320-S	Nut, hex., 5 diameter x 75 pitch (R. III):	
	- for clip for bearing on steering centring spring.	1
	- for positioning cam.	1
2.491-S	Nut, hex., 7 diameter x 100 pitch, locking end piece of steering column (R. III).	1
2.707-S	Ball, 6 mm diameter for bearing in steering column bracket (R. VI).	9
620.077	Ball bearing for steering centring spring, 5 x 19 x 6 (R. VI).	1

The numbers underlined indicate new parts which do not appear on the illustration.

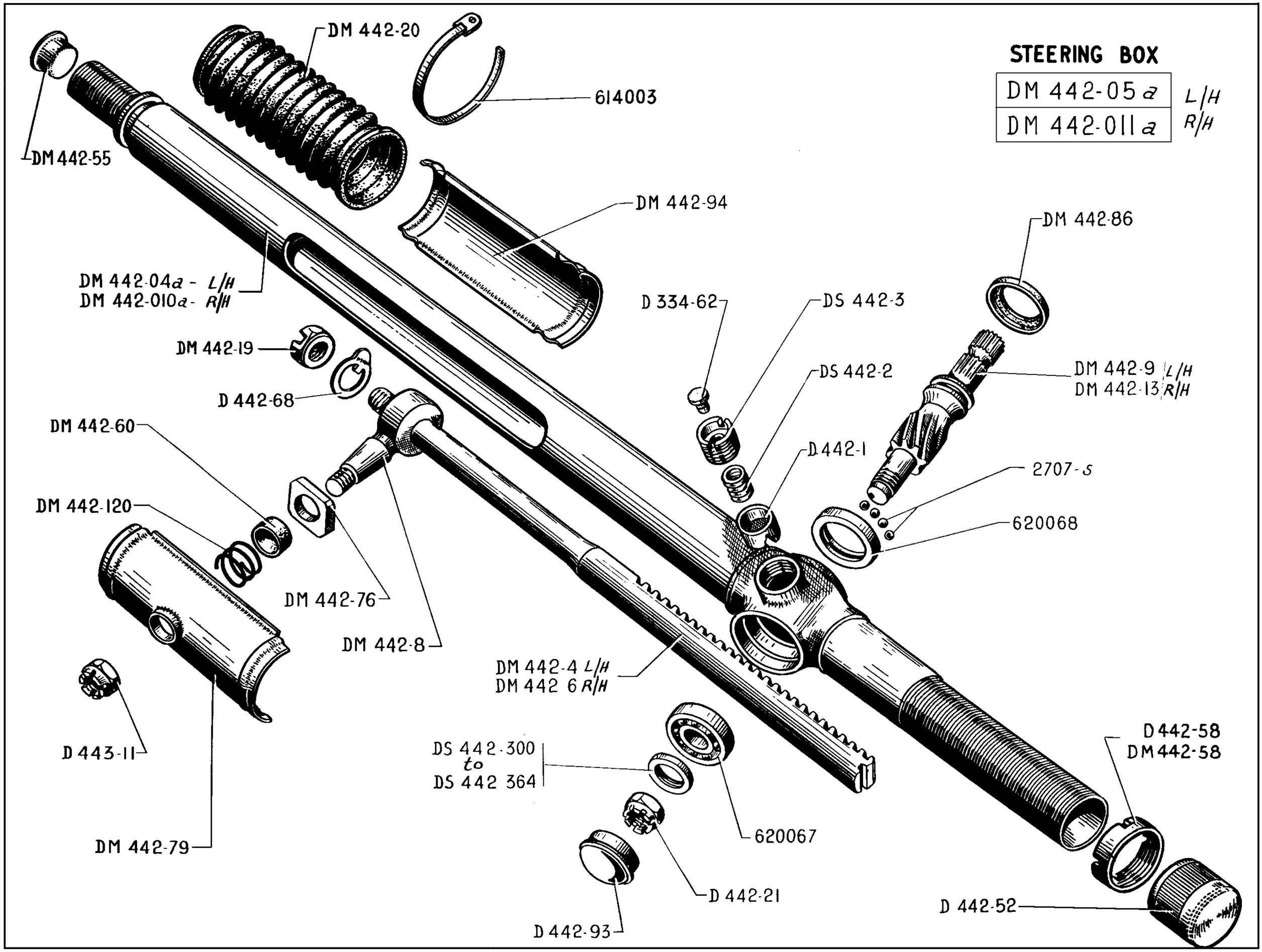
STEERING BOX
DM 442-05a L/H
DM 442-011a R/H
DM 442-20
614003
DM 442-55
DM 442-94
DM 442-86
DM 442-04a - L/H
DM 442-010a - R/H
D 334-62
DS 442-3
DM 442-19
DS 442-2
DM 442-9 L/H
DM 442-13 R/H
D 442-68
DM 442-60
D 442-1
2707-s
DM 442-120
620068
DM 442-76
DM 442-8
DM 442-4 L/H
DM 442 6 R/H
D 442-58
DM 442-58
D 443-11
DS 442-300
to
DS 442 364
620067
DM 442-79
D 442-21
D 442-52
D 442-93

NUMBER	DESCRIPTION	No. OFF
D 334-62	Dust plug, for nut of rack plunger guide.	1
DM 442-04a	Rack housing. Left-hand steering.	1
DM 442-05a	Steering housing complete. Left-hand steering.	1
DM 442-010a	Rack housing. Right-hand steering.	1
DM 442-011a	Steering housing complete. Right-hand steering.	1
D 442-1	Plunger guide in rack, 22 mm diameter.	1
DS 442-2	Spring, for rack plunger guide, external diameter 16.75 mm.	1
DS 442-3	Plunger nut for rack, external thread 24 diameter x 150 pitch, internal thread 9 diameter x 125 pitch.	1
DM 442-4	Steering rack. Left-hand steering.	1
DM 442-6	Steering rack. Right-hand steering.	1
DM 442-8	*Pivot pin on rack. Until October 1963. Replaced by DM 442-8a; order in addition: 1-615.750 (R. VI).*	1
DM 442-8a	Pivot pin on rack, without pin hole. Since October 1963.	1
DM 442-9	Pinion for rack. Left-hand steering.	1
DM 442-13	Pinion for rack. Right-hand steering.	1
DM 442-19	Locknut for pivot pin (R. VI).	1
DM 442-20	Flexible dust cover for rack.	2
D 442-21	Nut, hex., 12 diameter x 125 pitch, for adjusting clearance between pinion and rack (R. VI).	1
D 442-52	Thrust cap, adjustable, for rack, threaded 30 diameter x 100 pitch.	1
DM 442-55	End cap for housing (R. VI).	1
D 442-58	Nut for locking adjustable thrust cap for rack, 30 diameter x 100 pitch. Since November 1961.	1
DM 442-58	Nut for locking adjustable thrust cap for rack. Until November 1961.	1
DM 442-60	Sealing ring, rubber, for pivot pin on rack.	1

NUMBER	DESCRIPTION	No. OFF
D 442-68	Lockwasher, 14.2 diameter for locking pivot pin on rack (R. VI).	1
DM 442-76	Guide block for rack.	1
DM 442-79	Cover plate for rack, upper.	1
DM 442-86	Sealing ring for pinion.	1
D 442-93	Cap, sheet metal, on rack pinion housing, 34.05 mm diameter.	1
DM 442-94	Cover plate for rack, lower.	1
DS 442-103	Ball cage in nylon on outer bearing, upper, of rack pinion (R. VI), Since September 1963.	1
DM 442-120	Pivot pin thrust spring.	1
	Washer, adjusting, for rack pinion bearing, 12 x 18:	As nec.
DS 442-300	3.35 to 3.37 mm thick.	
DS 442-301	3.37 to 3.39 mm thick.	
DS 442-302	3.39 to 3.41 mm thick.	
DS 442-303	3.41 to 3.43 mm thick.	
DS 442-304	3.43 to 3.45 mm thick.	
DS 442-305	3.45 to 3.47 mm thick.	
DS 442-306	3.47 to 3.49 mm thick.	
DS 442-307	3.49 to 3.51 mm thick.	
DS 442-308	3.51 to 3.53 mm thick.	
DS 442-309	3.53 to 3.55 mm thick.	
DS 442-310	3.55 to 3.57 mm thick.	
DS 442-311	3.57 to 3.59 mm thick.	
DS 442-312	3.59 to 3.61 mm thick.	
DS 442-313	3.61 to 3.63 mm thick.	
DS 442-314	3.63 to 3.65 mm thick.	
DS 442-315	3.65 to 3.67 mm thick.	
DS 442-316	3.67 to 3.69 mm thick.	
DS 442-317	3.69 to 3.71 mm thick.	
DS 442-318	3.71 to 3.73 mm thick.	
DS 442-319	3.73 to 3.75 mm thick.	
DS 442-320	3.75 to 3.77 mm thick.	
DS 442-321	3.77 to 3.79 mm thick.	
DS 442-322	3.79 to 3.81 mm thick.	
DS 442-323	3.81 to 3.83 mm thick.	

NUMBER	DESCRIPTION	No. OFF
DS 442-324	3.83 to 3.85 mm thick.	
DS 442-325	3.85 to 3.87 mm thick.	
DS 442-326	3.87 to 3.89 mm thick.	
DS 442-327	3.89 to 3.91 mm thick.	
DS 442-328	3.91 to 3.93 mm thick.	
DS 442-329	3.93 to 3.95 mm thick.	
DS 442-330	3.95 to 3.97 mm thick.	
DS 442-331	3.97 to 3.99 mm thick.	
DS 442-332	3.99 to 4.01 mm thick.	
DS 442-333	4.01 to 4.03 mm thick.	
DS 442-334	4.03 to 4.05 mm thick.	
DS 442-335	4.05 to 4.07 mm thick.	
DS 442-336	4.07 to 4.09 mm thick.	
DS 442-337	4.09 to 4.11 mm thick.	
DS 442-338	4.11 to 4.13 mm thick.	
DS 442-339	4.13 to 4.15 mm thick.	
DS 442-340	4.15 to 4.17 mm thick.	
DS 442-341	4.17 to 4.19 mm thick.	
DS 442-342	4.19 to 4.21 mm thick.	
DS 442-343	4.21 to 4.23 mm thick.	
DS 442-344	4.23 to 4.25 mm thick.	
DS 442-345	4.25 to 4.27 mm thick.	
DS 442-346	4.27 to 4.29 mm thick.	
DS 442-347	4.29 to 4.31 mm thick.	
DS 442-348	4.31 to 4.33 mm thick.	
DS 442-349	4.33 to 4.35 mm thick.	
DS 442-350	4.35 to 4.37 mm thick.	
DS 442-351	4.37 to 4.39 mm thick.	
DS 442-352	4.39 to 4.41 mm thick.	
DS 442-353	4.41 to 4.43 mm thick.	
DS 442-354	4.43 to 4.45 mm thick.	
DS 442-355	4.45 to 4.47 mm thick.	
DS 442-356	4.47 to 4.49 mm thick.	
DS 442-357	4.49 to 4.51 mm thick.	
DS 442-358	4.51 to 4.53 mm thick.	
DS 442-359	4.53 to 4.55 mm thick.	
DS 442-360	4.55 to 4.57 mm thick.	
DS 442-361	4.57 to 4.59 mm thick.	
DS 442-362	4.59 to 4.61 mm thick.	
DS 442-363	4.61 to 4.63 mm thick.	
DS 442-364	4.63 to 4.65 mm thick.	

The numbers underlined indicate new parts which do not appear in the illustration.

NUMBER	DESCRIPTION	No. OFF
D 443-11	Nut, hex., castellated, 12 x 150, for rack pivot pin. Until October 1963.	1
2.707-S	Ball, 6 mm diameter for upper bearing on rack pinion (R. VI).	
	- Until September 1963.	13
	- Since September 1963.	10

NUMBER	DESCRIPTION	No. OFF
614.003	Clip securing rack dust cover, 335 mm long (R. VI).	4
615.750	Nut, "Nylstop", 12 x 150 x 9.3 mm high, for rack pivot pin (R. VI). Since October 1963.	1
620.067	Bearing, lower, for rack pinion, 12 x 32 x 10 (R. VI).	1

NUMBER	DESCRIPTION	No. OFF
620.068	*Race, outer, of upper rack pinion bearing, 27.4 x 35 x 7.5 (R. II). Until September 1963. Replaced by 620.121 (R. II); order in addition: 1-DS 442-103 (R. VI).*	1
620.121	Race, outer, of upper rack pinion bearing, 29 x 35 x 7.5 (R. II). Since September 1963.	1

The numbers underlined indicate new parts which do not appear in the illustration.

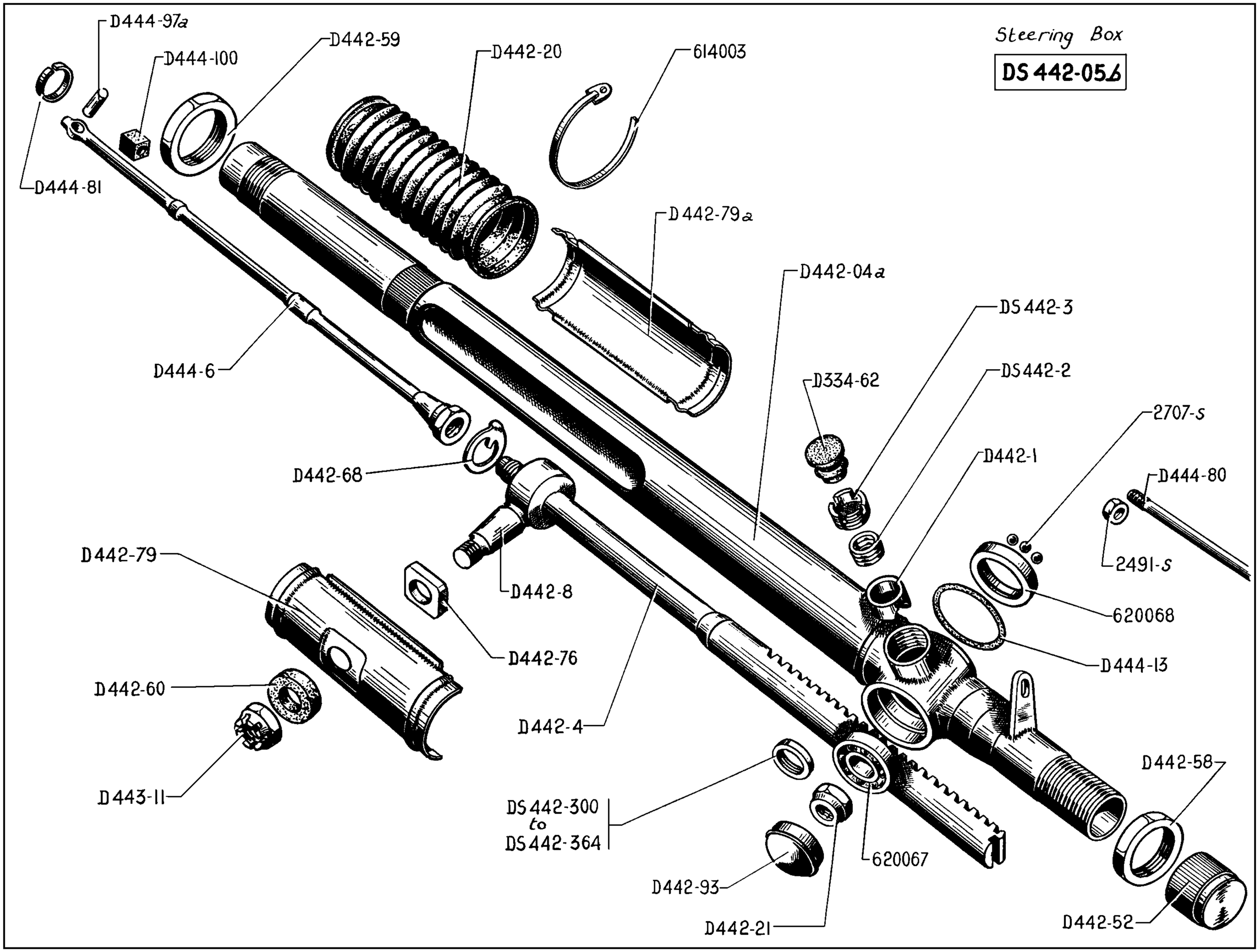
Steering Box
DS 442-05b
D444-97a
D444-100
D442-59
D442-20
614003
D444-81
D442-79a
D442-04a
DS 442-3
D444-6
D334-62
DS 442-2
2707-s
D442-1
D444-80
D442-68
2491-s
D442-79
D442-8
620068
D442-76
D444-13
D442-60
D442-4
D442-58
D443-11
DS 442-300
to
DS 442-364
620067
D442-93
D442-21
D442-52

NUMBER	DESCRIPTION	No. OFF
D 334-62	Dust cover, rubber, for steering rack plunger guide nut.	1
D 442-04a	Rack housing, 822 mm long (without fixed stop for steering lock). L.H. steering.	1
DS 442-05b	Steering box complete. L.H. steering.	1
D 442-010a	Rack housing, 822 mm long, without fixed stop for steering lock. R.H. steering.	1
DS 442-011c	Steering box complete. R.H. steering.	1
D 442-1	Plunger guide for rack, 22 mm diameter.	1
DS 442-2	Spring for rack plunger guide, external diameter 16.5 mm.	1
DS 442-3	Nut, for rack plunger guide, external thread 24 diameter x 150 pitch, internal thread 9 diameter x 125 pitch.	1
D 442-4	Steering rack 435 mm long, threaded 14 diameter x 150 pitch. L.H. steering.	1
D 442-6	Steering rack, 435 mm long, threaded 14 x 150. R.H. steering.	1
D 442-8	*Ball pin for rack, threaded 12 diameter x 150 pitch. Until October 1963. Replaced by DS 442-8; order in addition: 1-615.750 (R. VI).*	1
DS 442-8	Ball pin for rack, threaded 12 diameter x 150 pitch, without pin hole. Since October 1963.	1
D 442-20	Dust cover for rack, internal diameter 40 mm.	2
D 442-21	Nut, hex., 12 diameter x 125 pitch, for rack pinion (R. VI).	1
D 442-52	Thrust cup, adjustable, for rack, threaded 30 diameter x 100 pitch.	2
D 442-58	Nut, 30 diameter x 100 pitch, locking adjustable thrust cap for rack.	1
D 442-59	Locknut, 40 diameter x 100 pitch, locking end piece for rack housing.	1
D 442-60	Sealing washer, rubber, for rack ball pin, 16.5 x 28.5 x 9.	1
D 442-68	Lockwasher, 14.2 locking rack ball pin (R. VI).	1

NUMBER	DESCRIPTION	No. OFF
D 442-76	Guide block for rack, 16.5 x 23 x 28 x 5.	1
D 442-79	Upper slide on rack housing, 145 mm long, 1 hole 18 mm diameter.	1
D 442-79a	Lower slide on rack housing, 145 mm long.	1
D 442-93	Cap, sheet metal on rack housing, 34.05 mm diameter.	1
DS 442-103	Ball cage in nylon on outer bearing, upper of rack pinion (R. VI). Since September 1963.	1
	Washer for adjustment of rack pinion bearing, 12 x 18:	As nec.
DS 442-300	3.35 to 3.37 mm thick.	
DS 442-301	3.37 to 3.39 mm thick.	
DS 442-302	3.39 to 3.41 mm thick.	
DS 442-303	3.41 to 3.43 mm thick.	
DS 442-304	3.43 to 3.45 mm thick.	
DS 442-305	3.45 to 3.47 mm thick.	
DS 442-306	3.47 to 3.49 mm thick.	
DS 442-307	3.49 to 3.51 mm thick.	
DS 442-308	3.51 to 3.53 mm thick.	
DS 442-309	3.53 to 3.55 mm thick.	
DS 442-310	3.55 to 3.57 mm thick.	
DS 442-311	3.57 to 3.59 mm thick.	
DS 442-312	3.59 to 3.61 mm thick.	
DS 442-313	3.61 to 3.63 mm thick.	
DS 442-314	3.63 to 3.65 mm thick.	
DS 442-315	3.65 to 3.67 mm thick.	
DS 442-316	3.67 to 3.69 mm thick.	
DS 442-317	3.69 to 3.71 mm thick.	
DS 442-318	3.71 to 3.73 mm thick.	
DS 442-319	3.73 to 3.75 mm thick.	
DS 442-320	3.75 to 3.77 mm thick.	
DS 442-321	3.77 to 3.79 mm thick.	
DS 442-322	3.79 to 3.81 mm thick.	

NUMBER	DESCRIPTION	No. OFF
DS 442-323	3.81 to 3.83 mm thick.	
DS 442-324	3.83 to 3.85 mm thick.	
DS 442-325	3.85 to 3.87 mm thick.	
DS 442-326	3.87 to 3.89 mm thick.	
DS 442-327	3.89 to 3.91 mm thick.	
DS 442-328	3.91 to 3.93 mm thick.	
DS 442-329	3.93 to 3.95 mm thick.	
DS 442-330	3.95 to 3.97 mm thick.	
DS 442-331	3.97 to 3.99 mm thick.	
DS 442-332	3.99 to 4.01 mm thick.	
DS 442-333	4.01 to 4.03 mm thick.	
DS 442-334	4.03 to 4.05 mm thick.	
DS 442-335	4.05 to 4.07 mm thick.	
DS 442-336	4.07 to 4.09 mm thick.	
DS 442-337	4.09 to 4.11 mm thick.	
DS 442-338	4.11 to 4.13 mm thick.	
DS 442-339	4.13 to 4.15 mm thick.	
DS 442-340	4.15 to 4.17 mm thick.	
DS 442-341	4.17 to 4.19 mm thick.	
DS 442-342	4.19 to 4.21 mm thick.	
DS 442-343	4.21 to 4.23 mm thick.	
DS 442-344	4.23 to 4.25 mm thick.	
DS 442-345	4.25 to 4.27 mm thick.	
DS 442-346	4.27 to 4.29 mm thick.	
DS 442-347	4.29 to 4.31 mm thick.	
DS 442-348	4.31 to 4.33 mm thick.	
DS 442-349	4.33 to 4.35 mm thick.	
DS 442-350	4.35 to 4.37 mm thick.	
DS 442-351	4.37 to 4.39 mm thick.	
DS 442-352	4.39 to 4.41 mm thick.	
DS 442-353	4.41 to 4.43 mm thick.	
DS 442-354	4.43 to 4.45 mm thick.	
DS 442-355	4.45 to 4.47 mm thick.	
DS 442-356	4.47 to 4.49 mm thick.	
DS 442-357	4.49 to 4.51 mm thick.	
DS 442-358	4.51 to 4.53 mm thick.	
DS 442-359	4.53 to 4.55 mm thick.	
DS 442-360	4.55 to 4.57 mm thick.	
DS 442-361	4.57 to 4.59 mm thick.	
DS 442-362	4.59 to 4.61 mm thick.	
DS 442-363	4.61 to 4.63 mm thick.	
DS 442-364	4.63 to 4.65 mm thick.	

The numbers underlined indicate new parts which do not appear in the illustration.

NUMBER	DESCRIPTION	No. OFF
D 443-11	Nut, hex., castellated, 12 diameter x 150 pitch, for ball pin on steering rack. Until October 1963.	1
D 444-6	Rod controlling rack, threaded 14 diameter x 150 pitch, length 460 mm.	1
D 444-13	Sealing joint between rotating union and rack casing, 37 x 47.6 x 5.3.	1
D 444-80	Rod securing rotating union, threaded 7 diameter x 100 pitch, length 105.5 mm.	1
D 444-81	Split ring locking connecting pin for rod controlling rack and piston, internal diameter 19.5 mm.	1

NUMBER	DESCRIPTION	No. OFF
D 444-97a	Connecting pin for rod controlling rack and piston, 6 x 19.5.	1
D 444-100	Bush, rubber, anti-rattle on rack control rod, length 15 mm.	1
706	Packet of joints for rack control.	1
2.491-S	Nut, hex., 7 diameter x 100 pitch, on rod securing rotating union (R. III).	
2.707-S	Ball, 6 mm diameter for upper ball bearing on rack pinion (R. VI). Until September 1963. Since September 1963.	 13 10
614.003	Clip securing gaiter on rack, length 335 mm (R. VI).	4

NUMBER	DESCRIPTION	No. OFF
615.750	Nut, 12 x 150 x 9.3 mm high, for rack pivot pin (R. VI). Since October 1963.	1
620.067	Ball bearing, lower for rack pinion, 12 x 32 x 10 (R. VI).	1
620.068	*Outer race for upper ball bearing on rack pinion, 27.4 x 35 x 7.5 (R. II). Until September 1963. Replaced by 620.121 (R. II); order in addition: 1-DS 442.103 (R. VI).*	1
620.121	Race, outer, of upper rack pinion bearing, 29 x 35 x 7.5 (R. II). Since September 1963.	1

The numbers underlined indicate new parts which do not appear in the illustration.

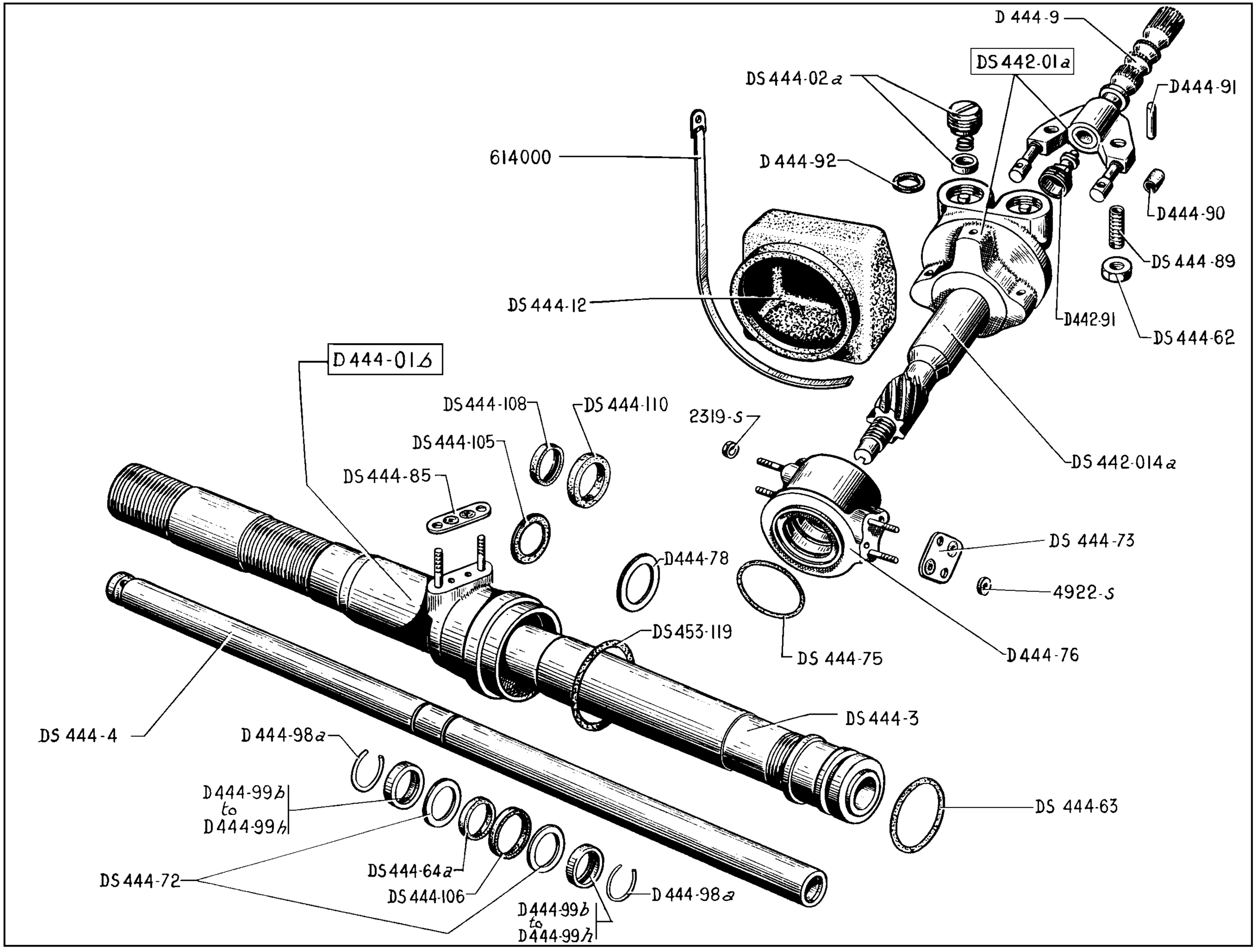
D 444-9
DS 442-01a
DS 444-02a
D444-91
614000
D 444-92
D444-90
DS 444-89
DS 444-12
D442-91
DS 444-62
D 444-01b
DS 444-108
DS 444-110
2319-S
DS 444-105
DS 442-014a
DS 444-85
DS 444-73
D444-78
4922-S
DS453-119
DS 444-75
D 444-76
DS 444-4
D 444-98a
DS 444-3
D 444-99b to D 444-99h
DS 444-63
DS 444-72
DS 444-64a
DS 444-106
D 444-98a
D 444-99b to D 444-99h

NUMBER	DESCRIPTION	No. OFF
DS 442-01a	Pinion controlling rack complete with rotating union and coupling fork. L.H. steering.	1
DS 442-02a	Pinion controlling rack complete with rotating union and coupling fork. R.H. steering.	1
DS 442-013a	Pinion for rack, with valves and dash-pot DS 444-02a. R.H. steering.	1
DS 442-014a	Pinion for rack, with valves and dash-pot DS 444-02a. L.H. steering.	1
D 442-91	Spherical end piece for rack pinion, threaded 20 diameter x 125 pitch.	1
D 444-01b	Control for rack complete with casing end piece, cylinder and piston, threaded 30 diameter x 100 pitch on 31 mm.	1
DS 444-02a	Cap for dash-pot with spring and thrust washer for valve, length 18.5 mm.	2
DS 444-3	Cylinder controlling rack with end piece. Until December 1963.	1
DS 444-3c	Cylinder controlling rack with end piece. Since December 1963.	1
DS 444-4	Rod controlling rack piston.	1
D 444-9	Coupling fork for rack pinion.	1
DS 444-12	Cover, rubber, protecting steering pinion.	1
DS 444-62	Nut, hex., 7 diameter x 100 pitch, with shoulder for adjusting screw for rotating union slide valve.	2

NUMBER	DESCRIPTION	No. OFF
DS 444-63	Ring seal, 27.7 x 33.1 x 2.7, for rack control (R. VI).	
	Until December 1963.	1
	Since December 1963.	2
DS 444-64a	Joint, rubber, 20.9 x 24.2 x 2.2 for piston rod controlling rack.	1
D 444-69	Rotating union only. R.H. steering.	1
DS 444-72	Washer, Rilsan, for piston controlling rack, 21 x 25.3 x 1.	2
DS 444-73	Seal plate for piping on rotating union, 2 holes 7.6, 2 fixing holes 16 mm between centres (R. VI).	2
DS 444-75	Ring seal for rotating union, 24.5 x 29.9 x 2.7 (R. VI).	5
D 444-76	Rotating union only. L.H. steering.	1
D 444-78	Sealing washer, 22 x 29.5 x 1, for rack control (R. VI). Until December 1963.	1
DS 444-85	Seal plate for joints of piping on end casing, 2 holes 7.6, 2 fixing holes 30 mm between centres (R. VI).	1
DS 444-89	Screw, 7 diameter x 100 pitch, for adjusting rotating union slide valve, 18.5 mm long.	2
D 444-90	Rubber bush for rotating union, 8.8 x 11.5 x 9.	2
D 444-91	Needle, 2.5 x 14.75 operating steering slide valve (R. VI).	2
D 444-92	Sealing ring between plug and cylinder of rotating union, 22 x 3.5.	2

NUMBER	DESCRIPTION	No. OFF
D 444-98a	Circlip, retaining piston joint washers, 1 mm diameter wire.	2
	Shouldered washer, retaining piston joint, 21 x 22.05 x 24.8. On diameter: 21.	As nec.
D 444-99b	1.30 to 1.38 mm thick.	
D 444-99c	1.38 to 1.46 mm thick.	
D 444-99d	1.46 to 1.54 mm thick.	
D 444-99e	1.54 to 1.62 mm thick.	
D 444-99f	1.62 to 1.70 mm thick.	
D 444-99g	1.70 to 1.78 mm thick.	
D 444-99h	1.78 to 1.86 mm thick.	
DS 444-105	*Washer, Rilsan, 21 x 27.3 x 0.3, for rack control. No longer supplied.*	2
DS 444-106	Joint, Teflon, 24.2 x 25.7 x 2.3, for piston rod controlling rack (R. VI).	1
DS 444-108	Joint, Teflon, for piston rod, 20.6 x 22 x 4.4 (R. VI).	2
DS 444-110	Joint, rubber, for piston rod, 22 x 27.65 x 4 (R. VI).	2
DS 453-119	Ring seal, 37 x 44 x 3.5, for rack control.	1
707	Packet of joints for rack control.	1
2.319-S	Nut, hex., 5 diameter x 75 pitch, securing piping on rotating union (R. III).	4
4.922-S	Ring seal, 4.2 x 8 x 1.9, for seal plate (R. VI). Since October 1956:	
	- for seal plate DS 444-73.	4
	- for seal plate DS 444-85.	2
614.000	Clip securing rubber protective cover for steering pinion, 474 mm long (R. VI).	1

The numbers underlined indicate new parts which do not appear in the illustration.

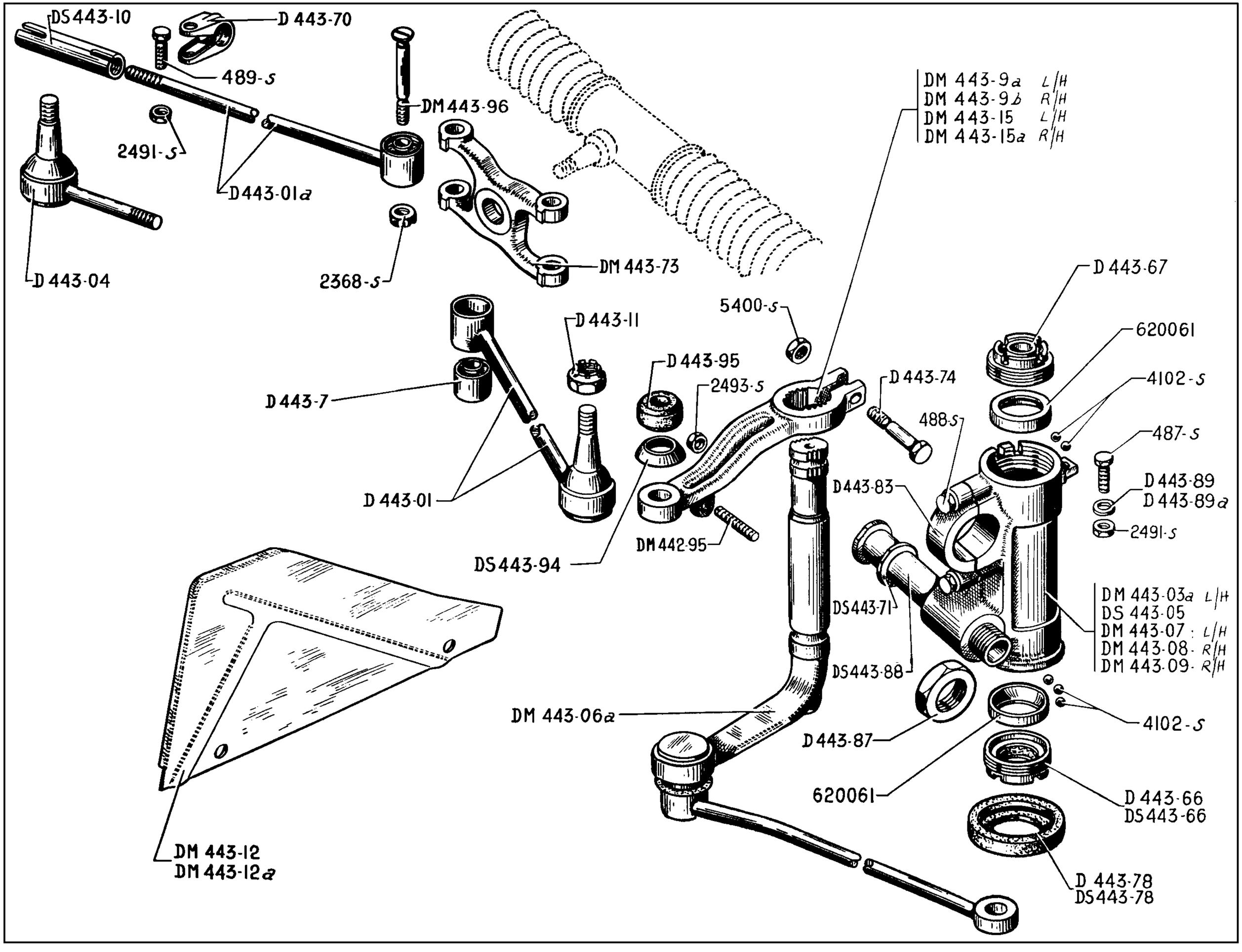
DS443-10
D 443-70
489-s
DM443-96
2491-s
D443-01a
D 443-04
2368-s
DM 443-73
DM 443-9a L/H
DM 443-9b R/H
DM 443-15 L/H
DM 443-15a R/H
D 443-67
5400-s
D 443-11
620061
D 443-95
2493-s
D 443-74
4102-s
D 443-7
488-s
487-s
D 443-01
D443-83
D 443-89
D 443-89a
2491-s
DM 442-95
DS 443-94
DS443-71
DM 443-03a L/H
DS 443-05
DM 443-07 L/H
DM 443-08 R/H
DM 443-09 R/H
DS443-88
DM 443-06a
D 443-87
4102-s
620061
D 443-66
DS443-66
DM 443-12
DM 443-12a
D 443-78
DS443-78

NUMBER	DESCRIPTION	No. OFF
DM 442-95	Screw, 7 diameter x 100 pitch 30 mm long, for steering lock.	1
D 443-01	*Steering rod, left-hand, with flexible bush and ball pin, 402 mm between centres. Replaced by DS 443-01; order in addition: 1-615.751 (R. VI).*	1
D 443-01a	Steering rod, right-hand with flexible bush, length from the end to pin centre, 305 mm, threaded 14 diameter x 125 right-hand pitch.	1
DS 443-01	Steering rod, left-hand, with flexible bush, without pin hole, 402 mm between centres. Since October 1963.	1
DM 443-03a	*Relay housing, left-hand complete with upper and lower steering levers and steering rod. Left-hand steering. Until February 1964. Replaced by DM 443-03d.*	1
DM 443-03d	*Relay housing, left-hand, complete with levers (upper lever threaded 7 x 100 for steering lock stop, lower lever with greaser) and steering rod L.H. steering. February 1964 - June 1965. Replaced by DM 443-03f.*	1
DM 443-03e	*Relay housing, right-hand, complete with levers (lower lever with greaser) and steering rod L.H. steering. February 1964 - June 1965. Replaced by DM 443-03g.*	1
DM 443-03f	Relay housing, left-hand, complete with levers for steering rod (lower lever with greaser) screw stop for lock, diameter of body 54 mm. L.H. steering. Since June 1965.	1
DM 443-03g	Relay housing, right-hand, complete with lever for steering rod (lower lever with greaser) diameter of body 54 mm. L.H. steering. Since June 1965.	1

NUMBER	DESCRIPTION	No. OFF
D 443-04	*End piece with ball pin, for R.H. steering rod, threaded 14 diameter x 125 L.H. pitch. Replaced by DS 443-04; order in addition: 1-615.751 (R. VI).*	1
DS 443-04	End piece with ball pin, without pin hole, for right-hand steering rod, threaded 14 diameter x 125 left-hand pitch. Since October 1963.	1
DS 443-05	*Relay housing with steering with cap and bushing. Shoulder 53 mm diameter. Until June 1965. Replaced by DS 443-05a.*	2
DS 443-05a	Relay housing with cap and bushing, 54 mm diameter. Since June 1965.	2
DM 443-06a	*Lever, lower, for steering relay complete with steering rod. Until February 1964. Replaced by DM 443-06b for left side. Replaced by DM 443-06c for right side.*	2
DM 443-06b	Lower relay lever, left-hand, with greaser and steering rod. Since February 1964.	1
DM 443-06c	Lower relay lever, right-hand, with greaser and steering rod. Since February 1964.	1
DM 443-07	*Relay housing, right-hand, complete with upper and lower levers and steering rod. Left-hand steering. Until February 1964. Replaced by DM 443-03g.*	1
DM 443-07c	Relay housing, left-hand, complete with levers (lower lever with greaser) and steering rod. R.H. steering. February 1964 - June 1965.	1
DM 443-07d	*Relay housing, right-hand, complete with levers (lower lever with greaser) and steering rod. R.H. steering. February 1964 - June 1965. Replaced by DM 443-07f.*	1

NUMBER	DESCRIPTION	No. OFF
DM 443-07e	Relay housing, left-hand, complete with levers and steering rod (lower lever with greaser) diameter of body 54 mm. R.H. steering. Since June 1965.	1
DM 443-07f	Relay housing, right-hand, complete with levers and steering rod (lower lever with greaser) diameter of body 54 mm. R.H. steering. Since June 1965.	1
DM 443-08	*Relay housing, left-hand complete. Right-hand steering. Until February 1964. Replaced by DM 443-07c.*	1
DM 443-09	*Relay housing, right-hand complete. Right-hand steering. Until February 1964. Replaced by DM 443-07f.*	1
D 443-7	Bush, flexible for tie-rod, 10 x 22 x 23 (R. VI).	2
DM 443-9a	Lever, upper, left-hand for steering relay (threaded 7 diameter x 100 pitch for steering lock). Left-hand steering.	1
DM 443-9b	Lever, upper, left-hand for steering relay. Right-hand steering.	1
DS 443-10	Sleeve, adjustable, for steering rod, threaded 14 diameter x 125 left-hand and right-hand pitch, 80 mm long, without positioning dowel.	1
D 443-11	Nut, hex., castellated, 12 diameter x 150 pitch, for ball pins on steering rod. Until October 1963.	6
DM 443-12	Protection cover, left-hand for steering relay housing.	1
DM 443-12a	Protection cover, right-hand for steering relay housing.	1
DM 443-15	Lever, upper, right-hand for steering relay. Left-hand steering.	
DM 443-15a	Lever, upper, right-hand for steering relay (threaded 7 diameter x 100 pitch for steering lock stop). Right-hand steering.	1

The numbers underlined indicate new parts which do not appear on the illustration.

NUMBER	DESCRIPTION	No. OFF
D 443-66	Ring nut, 45 diameter x 150 pitch, lower, for steering relay housing, with sealing washer, 31 mm internal diameter. Until January 1961.	2
DS 443-66	Ring nut, 45 diameter x 150 pitch, lower, for steering relay housing with sealing washer. Since January 1961.	2
D 443-67	Ring nut, 45 diameter x 150 pitch, upper, for steering relay housing with sealing washer, 25.5 mm internal diameter.	2
D 443-70	Clip securing adjustable sleeve on right-hand steering rod, 17.7 mm diameter.	2
DS 443-71	Washer, 22 x 43 x 6, on spindle securing relay housing.	2
DM 443-73	Shackle for connecting steering rods.	1
D 443-74	Screw, hex. head, 9 diameter x 125 pitch x 50 mm long for locking upper steering relay lever.	2
D 443-78	Rubber protection ring, lower, for steering relay housing, 24 x 41.5 x 6.5. Until January 1961.	2
DS 443-78	Rubber protector, for lower relay housing. Diameter 28 and 52.5. Since January 1961.	2
D 443-83	*Bearing cap for relay housing. Until June 1965. Replaced by DS 443-83.*	2

NUMBER	DESCRIPTION	No. OFF
DS 443-83	Bearing cap for relay housing, 2 holes 7 mm diameter x 14 mm high. Since June 1965.	2
D 443-87	Nut, hex., 20 diameter x 150 pitch, lower, securing steering relay housing.	2
DS 443-88	Spindle, lower, securing relay housing, 122 mm long.	2
D 443-89	Washer, 7.5 x 14 x 2, for adjusting steering relay housing.	As nec.
D 443-89a	Washer, 7.5 x 14 x 3, for adjusting steering relay housing.	As nec.
DS 443-94	Sealing cup on steering rod ball pin (R. VI).	4
D 443-95	Washer, rubber, for sealing cup on steering rod ball pin.	4
DM 443-96	*Spindle for shackle connecting steering rods. Until October 1963. Replaced by DM 443-96a; order in addition: 1-615.749 (R. VI).*	2
DM 443-96a	Spindle for shackle connecting steering rods, without pin hole. Since October 1963.	2
487-S	Screw, hex. head, 7 x 25, upper, for locking steering relay housing (R. III).	2

NUMBER	DESCRIPTION	No. OFF
488-S	Screw, hex. head, 7 x 28, for securing cap on housing (R. III).	4
489-S	Screw, hex. head, 7 x 30 (R. III) for securing: - clamping collar on adjustable sleeve on right-hand steering rod.	2
2.368-S	Nut, hex., castellated, 9 x 125, for spindle in shackle connecting steering rods (R. III). Until October 1963.	2
2.491-S	Nut, hex., 7 x 100 (R. III) for securing: - collar locking adjustable sleeve on right-hand steering rod.	2
	- top of steering relay housing.	2
2.493-S	Nut, hex., 7 x 100, for steering lock stop screw (R. III).	1
4.102-S	Ball, 6.74 mm diameter for bearing in steering relay housing (R. VI).	56
4.737-S	Greaser, hydraulic, right-hand, threaded 7 x 100, for lower relay lever (R. VI). Since February 1964.	2
5.400-S	Nut, hex., 9 x 125, for screws locking upper lever of steering relay (R. III).	2
615.749	Nut, "Nylstop", 9 x 125 x 8.9 mm high for spindle in shackle connecting steering rods (R. VI). Since October 1963.	2
615.751	Nut, "Nylstop" 12 x 150 x 11.6 mm high for steering rod ball pin (R. VI). Since October 1963.	4

The numbers underlined indicate new parts which do not appear on the illustration.

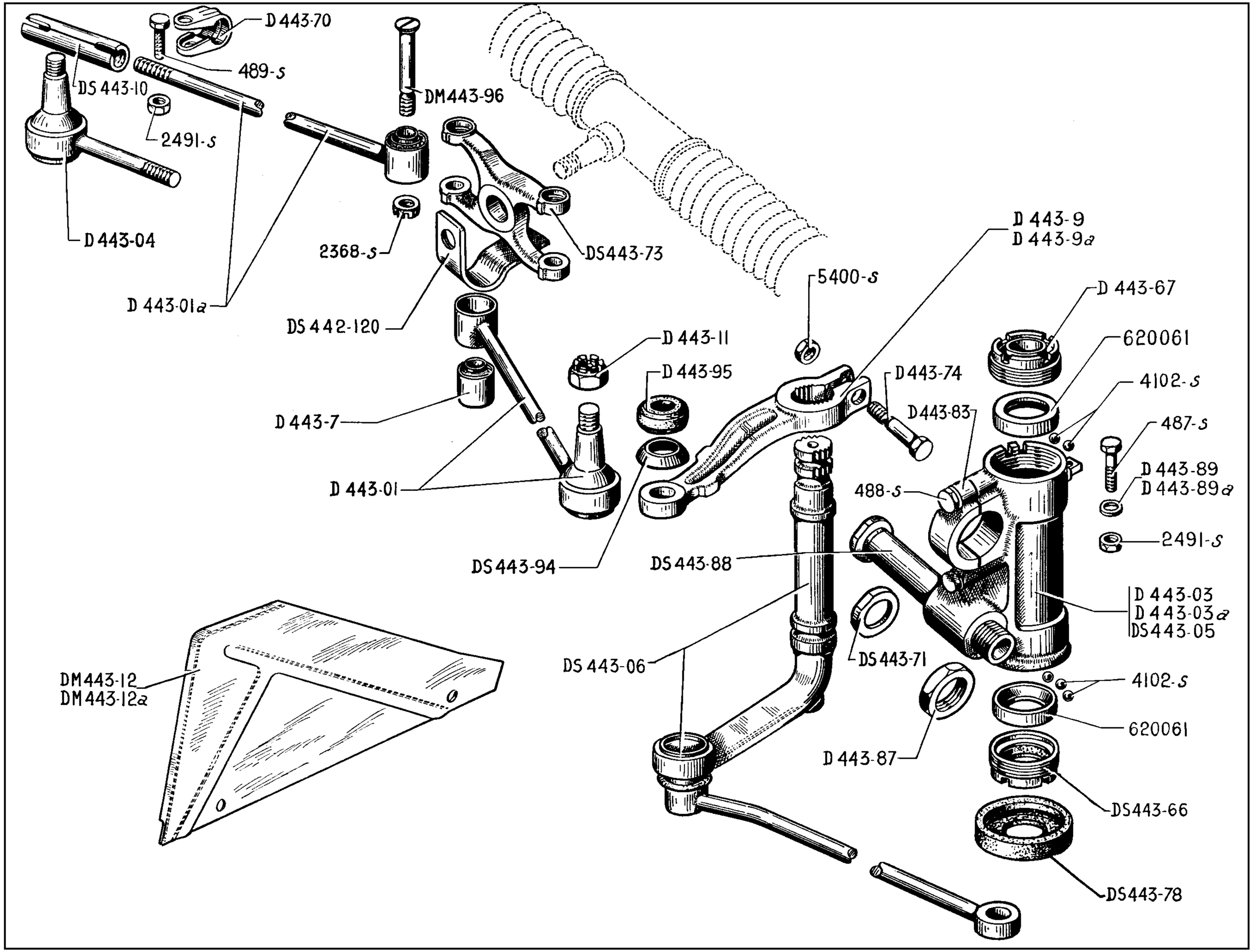
D 443-70
489-s
DS 443-10
2491-s
D 443-04
D 443-01a
DM443-96
2368-s
DS443-73
DS 442-120
D 443-9
D 443-9a
5400-s
D 443-67
620061
D 443-11
D 443-95
D 443-74
4102-s
D443-83
487-s
D 443-7
D 443-01
488-s
D 443-89
D 443-89a
2491-s
DS 443-94
DS 443-88
D 443-03
D 443-03a
DS443-05
DS 443-06
DS 443-71
4102-s
620061
D 443-87
DS443-66
DS443-78
DM443-12
DM443-12a

NUMBER	DESCRIPTION	No. OFF
DS 442-120	Spring retaining rack ball pin, 1.7 mm thick.	1
D 443-01	*Steering rod, left-hand, with flexible bush and ball pin, 402 mm between centres. Replaced by DS 443-01; order in addition: 1-615.751 (R. VI).*	1
DS 443-01	Steering rod left-hand, with flexible bush and ball pin, without pin hole, 402 mm between centres. Since October 1963.	1
D 443-01a	Steering rod, right-hand, with flexible bush, length from the end to pin centre, 305 mm.	1
D 443-03	*Relay housing left-hand, complete with upper and lower levers and tie-rod. Until February 1964. Replaced by DS 443-03b.*	1
D 443-03a	*Relay housing, right-hand, complete with upper and lower levers and tie-rod. Until February 1964. Replaced by DS 443-03c.*	1
DS 443-03	*Relay housing, left-hand, complete with levers (lower lever with greaser) and steering rod. February 1964 - June 1965. Replaced by DS 443-03b.*	1
DS 443-03a	*Relay housing, right-hand, complete with levers (lower lever with greaser) and steering rod. February 1964 - June 1965. Replaced by DS 443-03c.*	1
DS 443-03b	Relay housing, left-hand, complete with levers and steering rod (lower lever with greaser) diameter of body 54 mm. Since June 1965.	1
DS 443-03c	Relay housing, right-hand, complete with levers and steering rod (lower lever with greaser) diameter of body 54 mm. Since June 1965.	1

NUMBER	DESCRIPTION	No. OFF
D 443-04	*End piece with ball pin for right side of steering rod, threaded 14 diameter x 125 left-hand pitch. Replaced by DS 443-04; order in addition: 1-615.751 (R. VI).*	1
DS 443-04	End piece with ball pin, without pin hole, for right side of steering rod, threaded 14 diameter x 125 left-hand pitch. Since October 1963.	1
DS 443-05	*Relay housing with cap and bushing, shoulder 53 mm diameter. Until June 1965. Replaced by DS 443-05a.*	2
DS 443-05a	Relay housing with cap and bushing, 54 mm diameter. Since June 1965.	2
DS 443-06	*Lever, lower, for relay with coupling rod. Until February 1964. Replaced by DS 443-06a for left side. Replaced by DS 443-06b for right side.*	2
DS 443-06a	Lower relay lever, left-hand, with greaser and steering rod. Since February 1964.	1
DS 443-06b	Lower relay lever, right-hand, with greaser and steering rod. Since February 1964.	1
D 443-7	Flexible bush in steering rod, 10 x 22 x 33 (R. VI).	2
D 443-9	Lever, upper, left-hand, for relay, 130 mm between centres.	1
D 443-9a	Lever, upper, right-hand for relay, 130 mm between centres.	1
DS 443-10	Adjustment sleeve on steering rod, right-hand, threaded 14 diameter x 125 left-hand and right-hand pitch.	1
D 443-11	Nut, hex., castellated, 12 x 150, for ball pins on steering. Until October 1963.	6
DM 443-12	Shield, left-hand, protecting relay housing.	1

NUMBER	DESCRIPTION	No. OFF
DM 443-12a	Shield, right-hand, protecting relay housing.	1
DS 443-66	Nut, hex., 45 mm diameter x 150 pitch, for bottom of relay housing.	2
D 443-67	Nut, hex., 45 diameter x 150 pitch, for top of relay housing with sealing washer, internal diameter 25.5 mm.	2
D 443-70	Clamp securing adjustment sleeve on right-hand steering rod, internal diameter 17.7 mm.	2
DS 443-71	Washer, 22 x 43 x 6, locking spindle securing relay housing.	2
DS 443-73	Shackle for connecting steering rods, 17 mm thick.	1
D 443-74	Screw, hex. head, 9 diameter x 125 pitch x 50 mm long for locking upper relay lever.	2
DS 443-78	Rubber ring for bottom of relay housing, diameters 28 x 52.5.	2
D 443-83	*Cap for relay housing. Until June 1965. Replaced by DS 443-83.*	2
DS 443-83	Cap for relay housing, 2 holes 7 mm diameter x 14 mm high. Since June 1965.	2
D 443-87	Nut, hex., 20 diameter x 150 pitch, securing bottom of relay housing.	2
DS 443-88	Bolt for securing bottom of steering relay housing, 122 mm long.	2
D 443-89	Washer, 7.5 x 14 x 2, for adjustment of relay housing.	As nec.
D 443-89a	Washer, 7.5 x 14 x 3, for adjustment of relay housing.	As nec.

The numbers underlined indicate new parts which do not appear on the illustration.

NUMBER	DESCRIPTION	No. OFF
DM 443-96a	Bolts for steering rod shackle, without pin hole. Since October 1963.	2
487-S	Screw, hex. head, 7 diameter x 25 long, for locking top of relay housing (R. III).	2
488-S	Screw, hex. head, 7 diameter x 28 long, securing relay cap (R. III).	4
489-S	Screw, hex. head, 7 diameter x 30 long (R. III) securing: - clamp on adjustment sleeve on right-hand steering rod.	2

NUMBER	DESCRIPTION	No. OFF
2.368-S	Nut, hex., castellated, 9 diameter x 125 pitch, for bolts in shackle connecting steering rods (R. I). Until October 1963.	2
2.491-S	Nut, hex., 7 diameter x 100 pitch (R. III) securing: - collar locking adjustment sleeve on right-hand steering rod. - for bolt locking top of steering relay housing.	 2 2
4.102-S	Ball, 6.74 mm diameter for ball bearing in steering relay (R. VI).	56
4.737-S	Greaser, hydraulic, right-hand, threaded 7 x 100, for lower relay lever (R. VI). Since February 1964.	2

NUMBER	DESCRIPTION	No. OFF
5.400-S	Nut, hex., 9 diameter x 125 pitch, for screw locking upper lever of relay (R. III).	2
615.749	Nut, "Nylstop", 9 x 125 x 8.9 mm high, for spindle in shackle connecting steering rods (R. VI). Since October 1963.	2
615.751	Nut, "Nylstop", 12 x 150 x 11.6 mm high, for steering rod ball pins. Since October 1963.	4
620.061	Outer race of ball bearing for steering relay, 35 x 43 x 10 (R. II).	4

The numbers underlined indicate new parts which do not appear in the illustration.

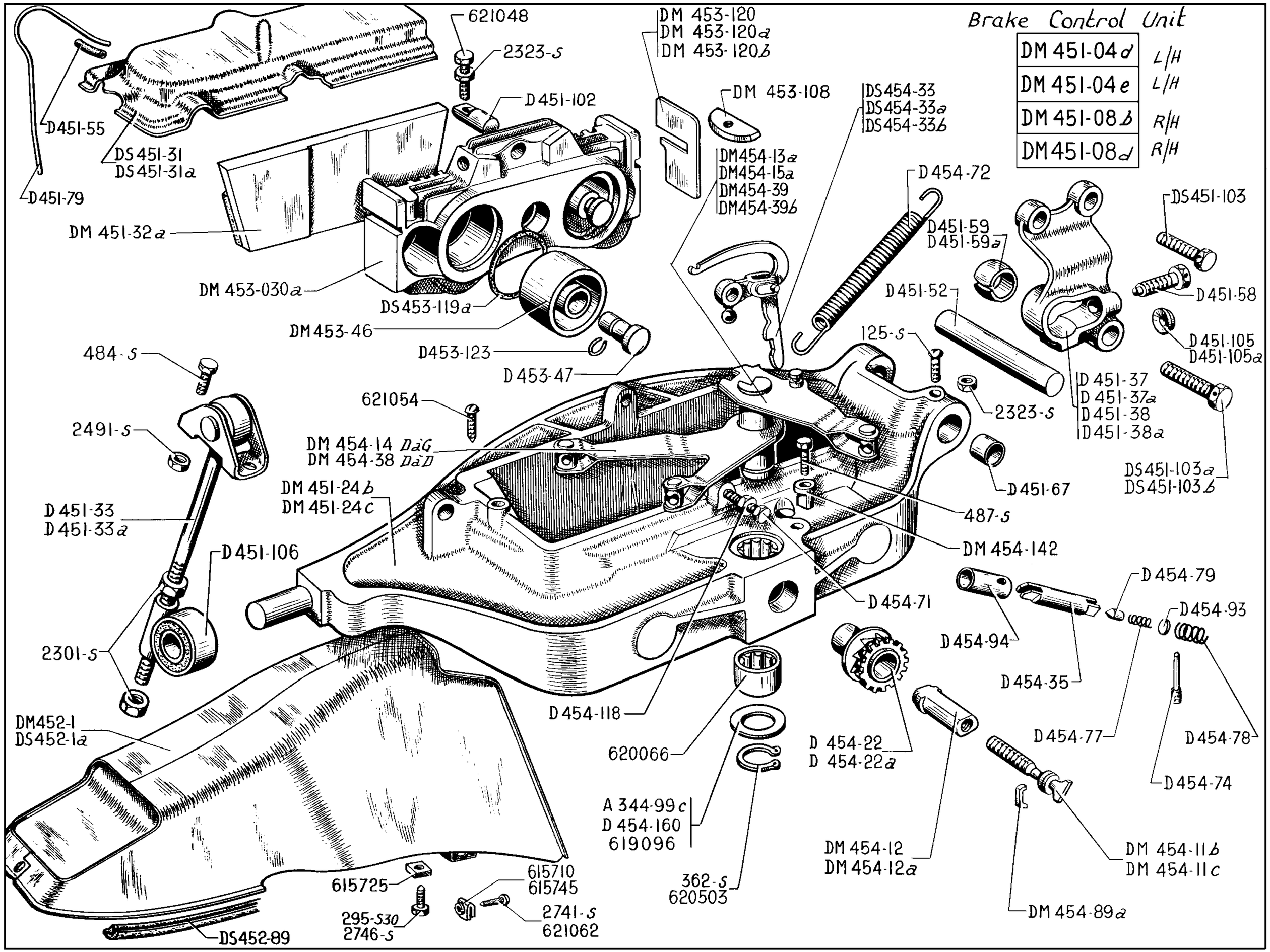
Brake Control Unit
DM 451-04d L/H
DM 451-04e L/H
DM 451-08b R/H
DM 451-08d R/H
621048
2323-S
DM 453-120
DM 453-120a
DM 453-120b
D451-102
DM 453-108
DS454-33
DS454-33a
DS454-33b
D451-55
DS451-31
DS451-31a
D451-79
DM454-13a
DM454-15a
DM454-39
DM454-39b
D454-72
DS451-103
DM 451-32a
D451-59
D451-59a
D451-52
D451-58
DM 453-030a
DS453-119a
DM453-46
D453-123
125-S
D451-105
D451-105a
484-S
D453-47
D451-37
D451-37a
D451-38
D451-38a
621054
2323-S
2491-S
DM 454-14 DaG
DM 454-38 DaD
DS451-103a
DS451-103b
D451-67
DM 451-24b
DM 451-24c
487-S
D451-33
D451-33a
DM 454-142
D451-106
D454-79
D454-71
D454-93
D454-94
2301-S
D454-35
D454-118
DM452-1
DS452-1a
D454-77
D454-78
620066
D 454-22
D 454-22a
D454-74
A 344-99c
D 454-160
619096
DM 454-12
DM 454-12a
DM 454-11b
DM 454-11c
615725
615710
615745
362-S
620503
295-S30
2746-S
2741-S
621062
DM 454-89a
DS452-89

NUMBER	DESCRIPTION	No. OFF
A 344-99c	Washer, for adjusting lever for mechanical operation, 20 x 32 x 0. 5.	As nec.
DM 451-04d	Brake control unit, left-hand complete with pistons, 42 mm diameter. Left-hand steering.	1
DM 451-04e	*Brake control unit, right-hand complete with pistons, 42 mm diameter. Left-hand steering. Until January 1964. Right-hand steering. Until December 1962. Replaced by DM 451-08a.*	1
DM 451-08b	Brake control unit, left-hand complete with pistons, 42 mm diameter. Right-hand steering.	1
DM 451-08d	*Brake control unit, right-hand complete with elbowed pawl. Left-hand steering. Since January 1964. Right-hand steering. Since December 1962. Replaced by DS 451-08a.*	1
DM 451-24b	Housing, left-hand with bearings and bushes.	1
DM 451-24c	*Housing, right-hand with bearings and bushes. Replaced by DS 451-24.*	1
DS 451-31	Protective casing for left-hand brake unit. Since October 1961. Replaces type from March 1960 to October 1961.	1
DS 451-31a	Protective casing for right-hand brake unit. Since October 1961. Replaces type from March 1960 to October 1961.	1
DM 451-32a	Segment carrying lining (with brake lining quality 623). (R. VI).	4
D 451-33	Support, adjustable, front left-hand (male part), threaded 12 diameter x 125 pitch.	1
	- left-hand and right-hand. Since September 1962.	2
D 451-33a	Support, adjustable front right-hand 108. 5 mm long (male part), threaded 12 diameter x 125 pitch. Until September 1962.	1
D 451-37	*Support, rear, left-hand (2 holes 10 mm diameter, 1 hole 13 mm diameter). Until December 1962. Replaced by D 451-37a; order in addition: 1-D 341-59a, 1-D 451-105a.*	1
D 451-37a	Support, rear, left-hand (2 holes 10 mm diameter, 1 hole 13 mm diameter) housing for ball pin 26 mm diameter. Since December 1962.	1
D 451-38	*Support, rear, right-hand (2 holes 10 mm diameter, 1 hole 13 mm diameter). Until December 1962. Replaced by D 451-38a; order in addition: 1-D 451-59a, 1-D 451-105a.*	1
D 451-38a	Support, rear, right-hand (2 holes 10 mm diameter, 1 hole 13 mm diameter) housing for ball pin 26 mm diameter. Since December 1962.	1
D 451-52	Pin for rear support, 9 x 16 x 80.	2
D 451-55	Sleeve, rubber, for protecting spring on protective casing, 2. 5 x 6 x 25. Since March 1960.	2
D 451-58	Screw, hex. head, 9 diameter x 25 mm long, locking spherical bush for rear support.	2
D 451-59	Spherical bush for rear support, 28 mm diameter x 17 mm thick. Until December 1962.	2
D 451-59a	Spherical bush for rear support, 26 mm diameter x 17 mm thick. Since December 1962.	2
D 451-67	Bush for housing, 16 x 19 x 16 (R. VI).	4
D 451-79	Spring for protective casing, 3 mm diameter. Since March 1960.	2
D 451-102	Pin carrying screw for locking lined segment, 9 mm diameter x 26 mm long.	4
DS 451-103	Screw, hex. head, 9 diameter x 25 mm long (1 hole in head), securing rear support.	3
DS 451-103a	Screw, hex. head, 12 diameter x 39 mm long (1 hole in head), securing rear support.	1
DS 451-103b	Screw, hex. head, 12 diameter x 54 mm long (1 hole in head), securing rear support.	1
D 451-105	Thrust pad, locking spherical bush in rear support, 17 mm diameter x 6 mm thick (arrangement with 28 mm diameter spherical bush). Until December 1962.	2
D 451-105a	Thrust pad, locking spherical bush in rear support, 17 mm diameter x 6 mm thick (arrangement with 26 mm diameter spherical bush). Since December 1962.	2
D 451-106	Support, front, adjustable, (female part), 13 mm bore (R. VI).	2
DM 452-1	*Cooling duct for front brake. Until September 1962. Replaced by DM 452-91; order in addition: 2 DM 512-94.*	2
DS 452-1a	Cooling duct for front brake. Since September 1962.	2
DS 452-89	Black rubber sealing joint between brake duct and panel (R. VI). Since September 1962.	2
DM 452-91	Cooling duct for front brake, (with welded parts). Until September 1962.	2
DM 453-030a	Movable carrier for 42 mm diameter pistons and joints.	2
DM 453-46	Piston for moving carrier, 42 mm diameter.	4
D 453-47	Piston rod for moving carrier, 11 mm diameter x 27. 35 mm long.	4
DM 453-108	Guide plate for moving carrier, 40 x 15. 5 x 4.	4
DS 453-119a	Ring seal, 41. 3 x 48. 5 x 3. 6, for moving carrier.	4
	Shim for adjusting moving carrier, 47 mm wide.	As nec.
DM 453-120	0. 635 mm wide.	
DM 453-120a	0. 685 mm wide.	
DM 453-120b	0. 736 mm wide.	
D 453-123	Circlip for piston rod of moving carrier, 0. 7 mm thick (R. VI).	4
DM 454-11b	Push-rod, adjustable, male, for left-hand brake control unit, 16 mm diameter on 13. 25 mm length.	1
DM 454-11c	Push-rod, adjustable, male, for right-hand brake control unit, 16 mm diameter on 13. 25 mm length.	1
DM 454-12	Push-rod, adjustable, female, for left-hand brake control unit, diameters 15. 4 mm and 19. 5 mm.	1
DM 454-12a	Push-rod, adjustable, female, for right-hand brake control unit, diameters 15. 4 mm and 19. 5 mm.	1

The numbers underlined indicate new parts which do not appear on the illustration.

NUMBER	DESCRIPTION	No. OFF
DM 454-13a	Lever with spindle for mechanical operation of left-hand brake control unit (groove for circlips, 1.3 mm wide). Left-hand steering. Since September 1960. Replaces earlier type; order in addition: 1-620.503 (R. VI).	1
DM 454-14	Return lever for left-hand brake control unit. Left-hand steering.	1
DM 454-15a	Lever with spindle for mechanical operation of right-hand brake control unit (groove for circlips 1.3 mm wide). Since September 1960. Replaces earlier type; order in addition: 1.620.503 (R. VI).	1
D 454-22	Adjustment wheel, left-hand, 8 teeth, 28 mm external diameter.	1
D 454-22a	Adjustment wheel, right-hand, 8 teeth, 28 mm external diameter.	1
DS 454-33	Pawl for left-hand brake unit (R. VI). Since October 1961. Replaces earlier type; order in addition; 1-DS 451-31.	1
DS 454-33a	Pawl for right-hand brake unit (R. VI). Right-hand steering. Until December 1962. Left-hand steering. October 1961 - January 1964. Replaces earlier type; order in addition: 1-DS 451-31.	1
DS 454-33b	Pawl, elbowed, for right-hand brake unit (R. VI). Right-hand steering. Since December 1962. Left-hand steering. Since January 1964.	1
D 454-35	Locking pin, 9.5 x 44.5.	2
DM 454-38	Return lever for left-hand brake control unit. Right-hand steering.	1
DM 454-39	*Lever with spindle for mechanical operation of left-hand brake control unit. Right-hand steering. Until September 1960. Replaced by DM 454-39b order in addition: 1-620.503.*	1

NUMBER	DESCRIPTION	No. OFF
DM 454-39b	Lever with spindle for mechanical operation of left-hand brake control unit (groove for circlips, 1.3 mm wide). Right-hand steering. Since September 1960.	1
D 454-71	Pin for brake control lever, threaded 5 diameter x 75 pitch, 20 mm long.	2
D 454-72	Return spring for operating lever.	2
D 454-74	Stop screw for locking spring pin, 5 diameter x 75 pitch x 28 mm long (R. VI).	2
D 454-77	Spring for locking pin plunger, 4.5 mm external diameter.	2
D 454-78	Spring for locking pin, external diameter 7.5 mm.	2
D 454-79	Plunger for locking pin, 4.8 x 7.5 (R. VI).	2
DM 454-89a	Circlip retaining male push-rod, 1.5 mm diameter wire.	2
D 454-93	Disc for spring on locking pin plungers, 7.5 mm diameter x 1 mm thick.	2
D 454-94	Guide bush for locking pin, 9.5 x 13 x 29 (R. VI).	2
D 454-118	Nut, hex., 5 diameter x 75 pitch, for operating lever stop screw (R. VI).	2
DM 454-142	Stop, eccentric, for adjusting operating lever, 7.25 mm internal diameter.	2
D 454-160	Spacing washer, upper, for mechanical operating lever, right-hand 20 x 32 x 4.	1
<u>DM 512-94</u>	Lateral anti-rattle band for brake cooling duct, 80 mm long. Until September 1962.	4
125-S	Screw, round head, 5 diameter x 15 mm long, for control lever return spring (R. III).	2
295-S 30	Screw, hex. head, pointed, 5 diameter x 16 long, securing brake cooling duct. Since September 1962.	4
362-S	Circlip, 18 x 24 x 1.5, for mechanical control lever spindle (R. III). Until September 1960.	2

NUMBER	DESCRIPTION	No. OFF
484-S	Screw, hex. head, 7 diameter x 17.5 long, securing adjustable front support (R. III).	4
487-S	Screw, hex. head, 7 diameter x 25 mm long, for eccentric stop for control lever adjustment (R. III).	2
2.301-S	Nut, hex., 12 diameter x 125 pitch, for securing adjustable front support (female part) (R. III).	4
2.323-S	Nut, hex., 5 diameter x 75 pitch (R. III) for screws:	
	- locking brake lining carrier plate.	4
	- return spring on control lever.	2
2.491-S	Nut, hex., 7 diameter x 100 pitch, for securing adjustable front support (R. III).	4
2.741-S	Screw, round head, P.K., 4.85 x 9.5 mm long, securing brake cooling duct (R. VI). Until September 1962.	4
2.746-S	Screw, round head, P.K., 4.85 x 16 mm long, securing brake cooling duct (R. VI). Since September 1962.	2
615.710	Nut clip, securing brake cooling duct (R. VI). Until September 1962.	4
615.725	Cage nut securing brake cooling duct (R. VI). Since September 1962.	4
615.745	Nut clip securing brake cooling duct (R. VI). Since September 1962.	2
619.096	Washer, lower, for mechanical control levers, 20 x 32 x 1 (R. II).	2
620.066	Needle roller bearing for housing, 20 x 26 x 16 (R. VI).	4
620.503	Circlips, locking spindle of mechanical control levers (R. VI). Since September 1960.	2
621.048	Screw, hex. head, pointed, 5 diameter x 75 pitch, 22 mm long, locking brake lining carrier plate (R. II).	4
621.054	*Screw, hex. head, pointed, 5 diameter x 35 mm long, for locking guide plate for moving carrier (R. II). Replaced by 298-S 30.*	4
621.062	Screw, hex. head, 5 diameter x x 14 mm long, securing brake cooling duct (R. III). Until September 1962.	2

The numbers underlined indicate new parts which do not appear on the illustration.

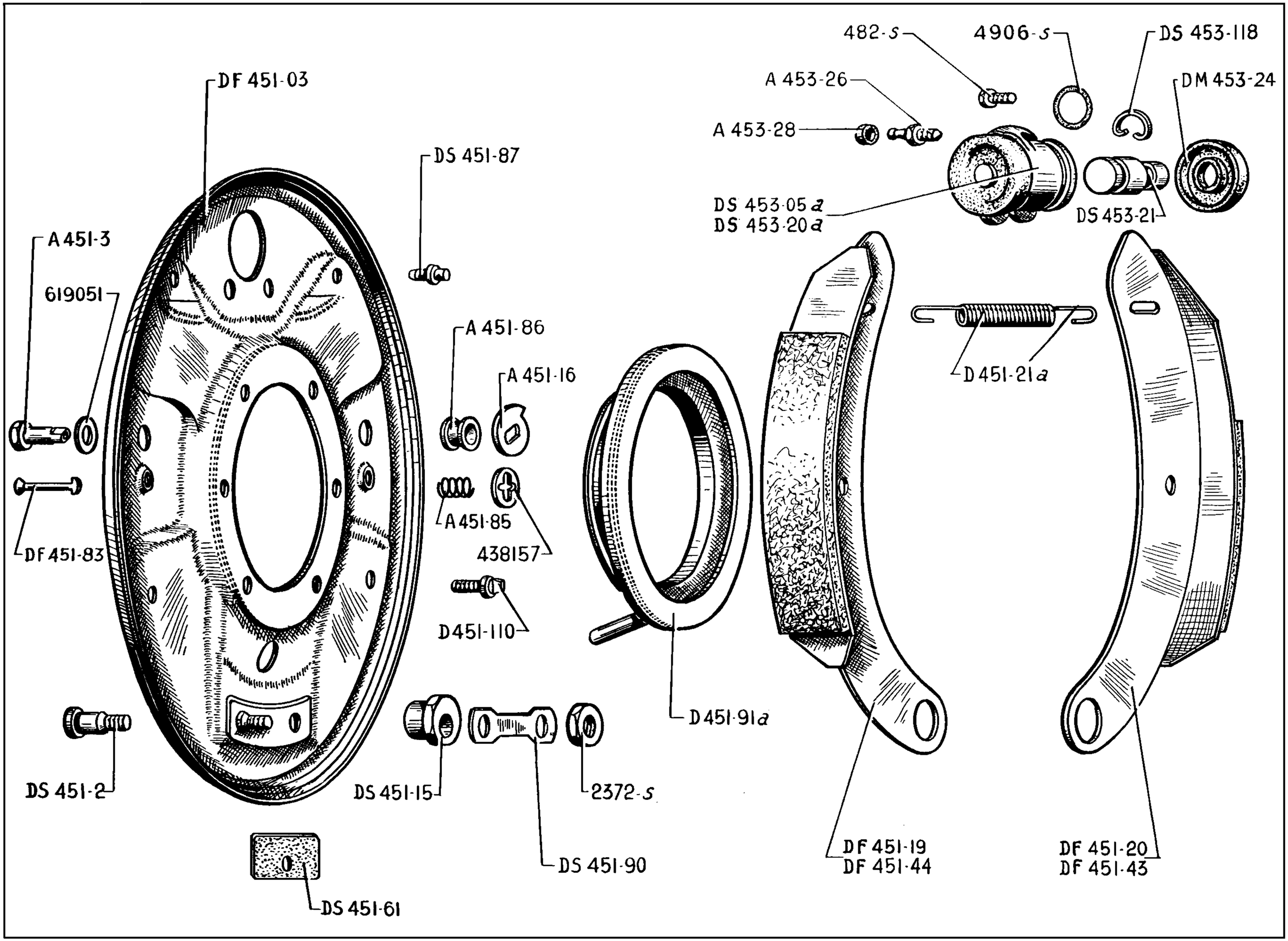
482-s
4906-s
DS 453-118
DF 451-03
A 453-26
DM 453-24
A 453-28
DS 451-87
DS 453-05 a
DS 453-20 a
DS 453-21
A 451-3
619051
A 451-86
A 451-16
D 451-21 a
A 451-85
DF 451-83
438157
D451-110
D 451-91 a
DS 451-2
DS 451-15
2372-s
DS 451-90
DF 451-19
DF 451-44
DF 451-20
DF 451-43
DS 451-61

NUMBER	DESCRIPTION	No. OFF
A 451-3	Pin, hex. head, (machine part 15.4 mm x 9 mm diameter) for brake adjustment cam.	4
A 451-16	Brake shoe adjusting cam, 32 mm wide.	4
A 451-85	Thrust spring, for brake shoe, 18 mm diameter (R. VI).	4
A 451-86	Distance piece for pressure adjustment cam, 9 mm diameter x 10 mm long.	4
A 453-26	Bleed screw for brake cylinder.	2
A 453-28	Cap, rubber, for brake cylinder bleed screw (R. VI).	2
DF 451-03	Brake backplate, 313 mm diameter with anchor pins.	2
DS 451-2	Anchor pins for brake shoes, 12 mm diameter x 26 mm long.	2
DS 451-15	Eccentric for brake shoe adjustment, 7 mm thick.	4
DF 451-19	Brake shoe, front left-hand, lining, 175 mm long x 45 mm wide.	1

NUMBER	DESCRIPTION	No. OFF
DF 451-20	Brake shoe, rear left-hand, lining, 132 mm long x 45 mm wide.	1
D 451-21a	Return spring for brake shoes, external diameter 14 mm.	2
DF 451-43	Brake shoe, rear right-hand, lining 132 mm long x 45 wide.	1
DF 451-44	Brake shoe, front, right-hand, lining, 175 mm long x 45 mm wide.	1
DS 451-61	Plate, rubber, for brake backplate, 31 x 45.	2
DF 451-83	Guide pin for brake shoe thrust spring, total length 38 mm (R. VI).	4
DS 451-87	Guide pin for brake shoe.	8
DS 451-90	Locking plate, double, 10.5 mm diameter, holes 40 mm between centres, for brake shoe adjusting eccentrics.	2
D 451-91a	Hold drain ring for brake with drain tube, diameters 85 x 134.	2
D 451-110	Screw, 7 diameter x 23 mm long, securing backplate.	12

NUMBER	DESCRIPTION	No. OFF
DS 453-05a	Brake cylinder complete (piston 20 mm diameter).	2
DS 453-20a	Wheel cylinder only, 20 mm internal diameter.	2
DS 453-21	Piston for wheel cylinder, 20 mm external diameter.	2
DM 453-24	Dust cap, rubber, for brake cylinder, 8 x 27.	4
DS 453-118	Circlip for rear wheel cylinder, 22 mm external diameter.	2
482-S	Screw, hex. head, 7 diameter x 12.5 mm long, securing cylinder (R. III).	4
2.372-S	Nut, hex., 9 diameter x 125 pitch, for brake adjustment eccentrics (R. III).	4
4.906-S	*Ring seal, 15.1 x 20.5 x 2.7, for cylinder (R. VI). Until July 1964. Replaced by 4.984-S.*	4
4.984-S	Ring seal, 15.1 x 20.5 x 27 for cylinder (R. III). Since July 1964.	4
438.157	Cup for brake shoe thrust spring, 19 mm internal diameter (R. II).	4
619.051	Washer, Belleville type, 9.5 x 27, for brake shoe adjustment cam (R. VI).	8

The numbers underlined indicate new parts which do not appear on the illustration.

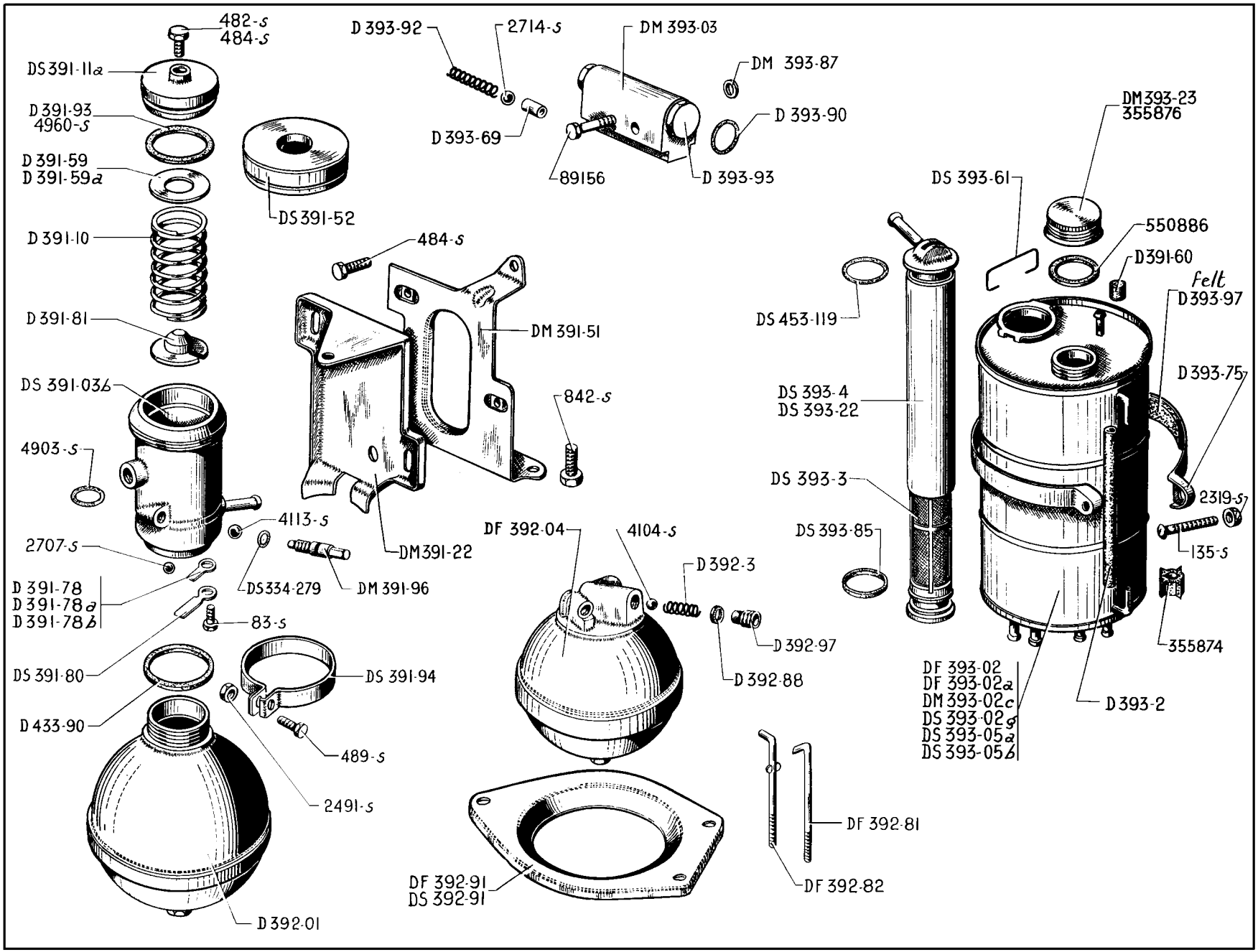
482-S
484-S
DS 391-11a
D 391-93
4960-S
D 391-59
D 391-59a
D 391-10
D 391-81
DS 391-036
4903-S
2707-S
D 391-78
D 391-78a
D 391-78b
DS 391-80
D 433-90
D 392-01
DS 391-52
D 393-92
2714-S
D 393-69
DM 393-03
DM 393-87
D 393-90
89156
D 393-93
484-S
DM 391-51
842-S
4113-S
DM 391-22
DS 334-279
DM 391-96
83-S
DS 391-94
489-S
2491-S
DF 392-04
4104-S
D 392-3
D 392-97
D 392-88
DF 392-91
DS 392-91
DF 392-81
DF 392-82
DS 393-61
DM 393-23
355876
550886
D 391-60
felt
D 393-97
DS 453-119
DS 393-4
DS 393-22
D 393-75
DS 393-3
2319-S
DS 393-85
135-S
355874
DF 393-02
DF 393-02a
DM 393-02c
DS 393-02g
DS 393-05a
DS 393-05b
D 393-2

NUMBER	DESCRIPTION	No. OFF
DS 334-279	Joint, rubber, for bleed screw for pressure regulator, 6.7 x 10.5 x 1.9 (R. VI).	1
DS 391-03b	*Pressure regulator with nut for tightening cap (marked 1 groove on nut). Since December 1960. Replaces earlier type. Replaced by DV 391-03; order in addition 1-DM 391-22a.*	1
D 391-10	Spring for pressure regulator, 34 mm external diameter.	1
DS 391-11a	Cap for pressure regulator, 42 mm diameter, 18.5 mm thick (1 groove mark). December 1960 - November 1963.	1
DS 391-11b	Cap for pressure regulator, 42 mm diameter x 16.5 mm thick (1 groove mark). Since November 1963.	1
DM 391-22	Bracket, intermediate, for pressure regulator.	1
DM 391-51	Bracket, for pressure regulator on cylinder.	1
DS 391-52	*Nut for tightening cap of pressure regulator, threaded 59 diameter x 150 pitch. December 1960 - November 1963. Replaced by DS 391-52a.*	1
DS 391-52a	Nut for tightening cap of pressure regulator, threaded 59 diameter x 150 pitch, diameter of hole for passage of screw securing pressure regulator 8.5 mm (1 groove mark). December 1960 - November 1963.	1
D 391-59	Washer, for adjusting pressure regulator, 20 x 34 x 0.25.	As nec.
D 391-59a	Washer, for adjusting pressure regulator, 20 x 34 x 1.	As nec.
D 391-60	Rubber cap, 7.5 x 12 x 20, for upper pipe from reservoir (R. VI). Since September 1960.	1
	Shim for adjustment of pressure regulator thrust spring.	As nec.
D 391-78	0.1 mm thick.	
D 391-78a	0.2 mm thick.	
D 391-78b	0.5 mm thick.	

NUMBER	DESCRIPTION	No. OFF
DS 391-80	Retaining plate for pressure regulator ball.	1
D 391-81	Cap with ball for pressure regulator.	1
D 391-93	Joint, rubber, lower, 38.6 x 44 x 4.5 for pressure regulator. Until December 1960.	1
DS 391-94	Clip securing pressure regulator.	1
DM 391-96	Bleed screw on pressure regulator.	1
D 392-01	Main accumulator.	1
DF 392-04	Brake accumulator.	1
D 392-3	Spring for brake accumulator, 8 mm external diameter.	1
DF 392-81	Tie-bolt securing brake accumulator, 74 mm long.	2
	Since September 1962.	1
DF 392-82	Tie-bolt securing brake accumulator, 65 mm long.	2
D 392-88	Thrust washer, 10 x 12 x 2.7 for brake accumulator.	1
DF 392-91	Flange for securing brake accumulator, distance between hole centres 80 and 94. Until September 1962.	1
DS 392-91	Flange securing brake accumulator 3 fixing holes. Since September 1962.	1
D 392-97	Screw for thrust spring for brake accumulator, threaded 14 diameter x 150 pitch.	1
	Reservoir for pump supply complete.	1
DF 393-02	- Left-hand steering. *Replaced by DM 393-02c; order in addition: 1-D 391-60.*	
DF 393-02a	- Right-hand steering. *Replaced by DS 391-05a; order in addition: 1-D 391-60.*	
DM 393-02c	- 3 pipes at the lower part, 1 pipe at the upper part. Until September 1960.	

NUMBER	DESCRIPTION	No. OFF
DS 393-02g	- 4 pipes at the lower part, 1 tube at the upper part. (Inscription in 4 languages). Since September 1960.	
DM 393-03	Distribution unit.	1
	Reservoir for pump supply complete.	1
DS 393-05a	- 3 pipes at the lower part. (Inscription in English). July 1960 - September 1960.	
DS 393-05b	- *4 pipes at the lower part. (Inscription in English). September 1960 - June 1961. Replaced by DS 393-02g.*	
D 393-2	Gauge tube on reservoir, nylon, 173 mm long (R. VI).	1
DS 393-3	Filter element only, for reservoir. 224 mm high (R. VI).	1
DS 393-4	Filter for reservoir complete with nylon filter tube.	1
DS 393-22	Filter tube only, for reservoir (R. VI).	1
DM 393-23	Cap for reservoir with filter (R. VI). EXPORT. Since June 1960.	1
DS 393-61	Spring for filter tube (R. VI).	1
D 393-69	Thrust piece for distribution unit, 5 x 8.5.	2
D 393-75	Strap, 15 x 549, securing reservoir.	2
DS 393-85	Sealing washer for reservoir filter, 35 x 40 x 5 (R. VI).	1
DM 393-87	Spacing washer for distribution unit, 5.5 x 16 x 8.	2
D 393-90	Joint for cap on distribution unit, 16 x 18.8 x 2.	2

The numbers underlined indicate new parts which do not appear in the illustration.

NUMBER	DESCRIPTION	No. OFF
D 393-92	Spring for distribution unit, 7.2 mm internal diameter.	2
D 393-93	Cap for distribution unit, threaded 16 diameter x 150 pitch.	2
D 393-97	Packing (felt), for reservoir, 2.5 mm long x 15 mm wide. Until June 1964.	2
D 433-90	Joint, rubber, 36 x 40 x 3.7, between pressure regulator and accumulator.	1
DS 453-119	Ring seal, 37 x 44 x 3.5 for unit tube.	1
83-S	Screw, countersunk head, 4 diameter x 10 mm long, for pressure regulator rod (R. III).	1
135-S	Screw, round head, 5 diameter x 40 mm long, securing reservoir (R. III).	2
482-S	Screw, hex. head, 7 diameter x 12.5 mm long, securing pressure regulator (R. III). Until December 1960.	2

NUMBER	DESCRIPTION	No. OFF
484-S	Screw, hex. head, 7 diameter x 17.5 mm long (R. III) securing:	
	- intermediate support for pressure regulator on bracket on cylinder.	2
	- Pressure regulator on bracket. December 1960 - November 1963.	1
485-S	Screw, hex. head, 7 x 20 (R. III).	1
	- pressure regulator on bracket. Since November 1963.	
489-S	Screw, hex. head, 7 diameter x 30 mm long, for pressure regulator clip (R. III).	1
705	Packet of joints for pressure regulator-accumulator.	1
842-S	Screw, hex. head, 10 diameter x 15 mm long, securing pressure regulator bracket to cylinder (R. III).	1
2.319-S	Nut, hex., 5 diameter x 75 pitch, securing reservoir (R. III).	2
2.491-S	Nut, hex., 7 diameter x 100 pitch, securing clip on pressure regulator (R. III).	1
2.707-S	Ball, 6 mm diameter for pressure regulator (for opening from pump to sphere) (R. VI).	1
2.714-S	Ball, 9.52 mm diameter for distribution unit (R. VI).	2

NUMBER	DESCRIPTION	No. OFF
4.104-S	Ball, 8.5 mm diameter for brake accumulator (R. VI).	1
4.113-S	Ball, 7.5 mm diameter for pressure regulator bleed screw (R. VI).	1
4.903-S	Ring seal, 8.9 x 12.7 x 1.9, for pressure regulator piston (R. VI).	1
4.960-S	Ring seal, 37.5 x 42.4 x 2.45, for pressure regulator cap (R. III). Since December 1960.	1
89.156	Screw, hex. head, 5 diameter x 40 mm long, securing distribution block (R. III).	2
355.874	Joint, rubber, 5 x 11 x 30, for gauge tube on reservoir (R. II).	2
355.876	Cap for reservoir, vent hole 1.6 mm diameter (R. VI).	1
550.886	Joint, rubber, 34 x 45, for reservoir cap (R. VI).	1

The numbers underlined indicate new parts which do not appear in the illustration.

NUMBER	DESCRIPTION	No. OFF
DS 314-74	*Adjusting stay for pump, 180 mm long. January 1962 - June 1965. Replaced by DX 391-74.*	1
DF 391-01	*Suspension pump complete. Until September 1964. Replaced by DVF 391-01; order in addition: 1-DS 391-103.*	1
DF 391-01b	*Suspension pump complete. September 1964 - June 1965. Replaced by DVF 391-01; order in addition 1-DS 391-103*	1
DVF 391-01	Pump, high pressure, complete, (double grooved pulley) arranged with inclined delivery pipe. Since June 1965.	1
DS 391-02	Cylinder and piston, collar diameter 18.5 and 20 mm.	7
DS 391-07b	Pump shaft with bearing (nut for securing bearing 10.5 mm thick). Since April 1962. Replaces earlier type.	1
D 391-3a	Valve spring, 8 mm external diameter.	7
D 391-4a	*Return spring for piston, 21 mm external diameter. Until March 1963. Replaced by DS 391-4; order in addition: 1-DS 391-98.*	7
DS 391-4	Return spring for piston, 21.35 mm external diameter. Since March 1963.	7
D 391-5	Valve for suspension pump, 1.2 mm thick, 13 mm diameter.	7
DF 391-13	Pulley for suspension pump, 2 grooves, 106 mm external diameter.	1
DS 391-15b	*Suspension pump body, 33 mm internal diameter. Until April 1965. Replaced by DS 391-15d; order in addition: 1-4.985-S.*	1
DS 391-15d	Suspension pump body, (fitting with cover sealed by ring seal). Since April 1965.	1
DS 391-16b	*Bearing end plate, for suspension pump shaft. Until June 1962. Replaced by DX 391-16; order in addition: 1-DS 391-103, 1-DS 391-21a.*	1
DS 391-16c	*Bearing end plate for suspension pump shaft (for assembly with needle roller bearing) September 1964 - June 1965. Replaced by DX 391-16; order in addition: 1-DS 391-103.*	1
DS 391-16e	*Bearing end plate, for suspension pump shaft, with bush. June 1962 - September 1964. Replaced by DX 391-16; order in addition: 1-DS 391-103, 1-DS 391-21a (R. VI).*	1
DX 391-16	Bearing end plate for suspension pump shaft (1 securing hole 9 mm diameter x 32.5 mm high). Since June 1965.	1
DF 391-18	Belt for suspension pump (R. VI).	2
D 391-20	*Cover for pump. Until June 1965. Replaced by DX 391-20.*	1
DX 391-20	Cover for high pressure pump with inclined delivery pipe. Since June 1965.	1
DS 391-21a	Needle roller bearing, 17.6 x 28 x 16 (R. VI). Since September 1964.	1
D 391-53	Closing cup, 21.5 x 55.5.	1
D 391-54	Deflector for pump, 12.1 x 44 x 5.4.	1
D 391-55	Retaining spring for bush, 22.5 mm external diameter.	1
DS 391-56	Retaining bush for pump, 18x27x9.	1
D 391-67	Sealing joint, rubber, between body and cover 80 x 84.5 x 3.4. Until April 1965.	1
DX 391-74	Stay for high pressure pump, 180 mm long, 1 hole 8.5 mm diameter. Since June 1965.	1
D 391-76	Nut, hex., 12 diameter x 125 pitch, for pulley (R. VI).	1
D 391-77	Lockwasher, 12.2 diameter for pulley nut.	1
D 391-82	*Ball for locking rod, 7 mm internal diameter x 9 mm thick. Until September 1964. Replaced by DS 391-82.*	1
DS 391-82	Ball for locking rod, 7 mm internal diameter x 9 mm thick. Since September 1964.	1
D 391-83	Locking rod, 7 mm diameter x 84.5 mm long.	1
DF 391-85	Adjusting stay for pump, 173 mm long. Until January 1962.	1
DS 391-86	Bracket for locking pump belt tensioning stay (straight type).	1
DS 391-88	*Bearing plate for pump stay, 15 x 15 x 3. Until June 1965. Replaced by DX 391-88.*	2
DX 391-88	Bearing plate for high pressure pump stay, 1 hole 8.5 mm diameter. Since June 1965.	2
D 391-90a	Distance piece for liners, 8 mm internal diameter x 21 mm external diameter.	7
D 391-98	*Cup for piston spring, 8.5 mm internal diameter x 21 mm external diameter. Until March 1963. Replaced by DS 391-98; order in addition: 1-DS 391-4.*	7
DS 391-98	Cup for piston spring, 8.5 mm internal diameter x 21 mm external diameter. Since March 1963.	7
D 391-99	Circlip (diameter of wire 1 mm).	7
DF 391-103	Screw, 9 diameter x 63 long with 7.5 mm groove securing high pressure pump. Right-hand steering. November 1962 - June 1965.	1
DS 391-103	Screw 9 x 125 for securing high pressure pump on gearbox housing, length under head 65 mm. L.H. steering. Since June 1965.	1
DX 391-103	Screw, 9 x 125, for securing high pressure pump on gearbox housing, length under head 82 mm. R.H. steering. Since June 1965.	1

The numbers underlined indicate new parts which do not appear on the illustration.

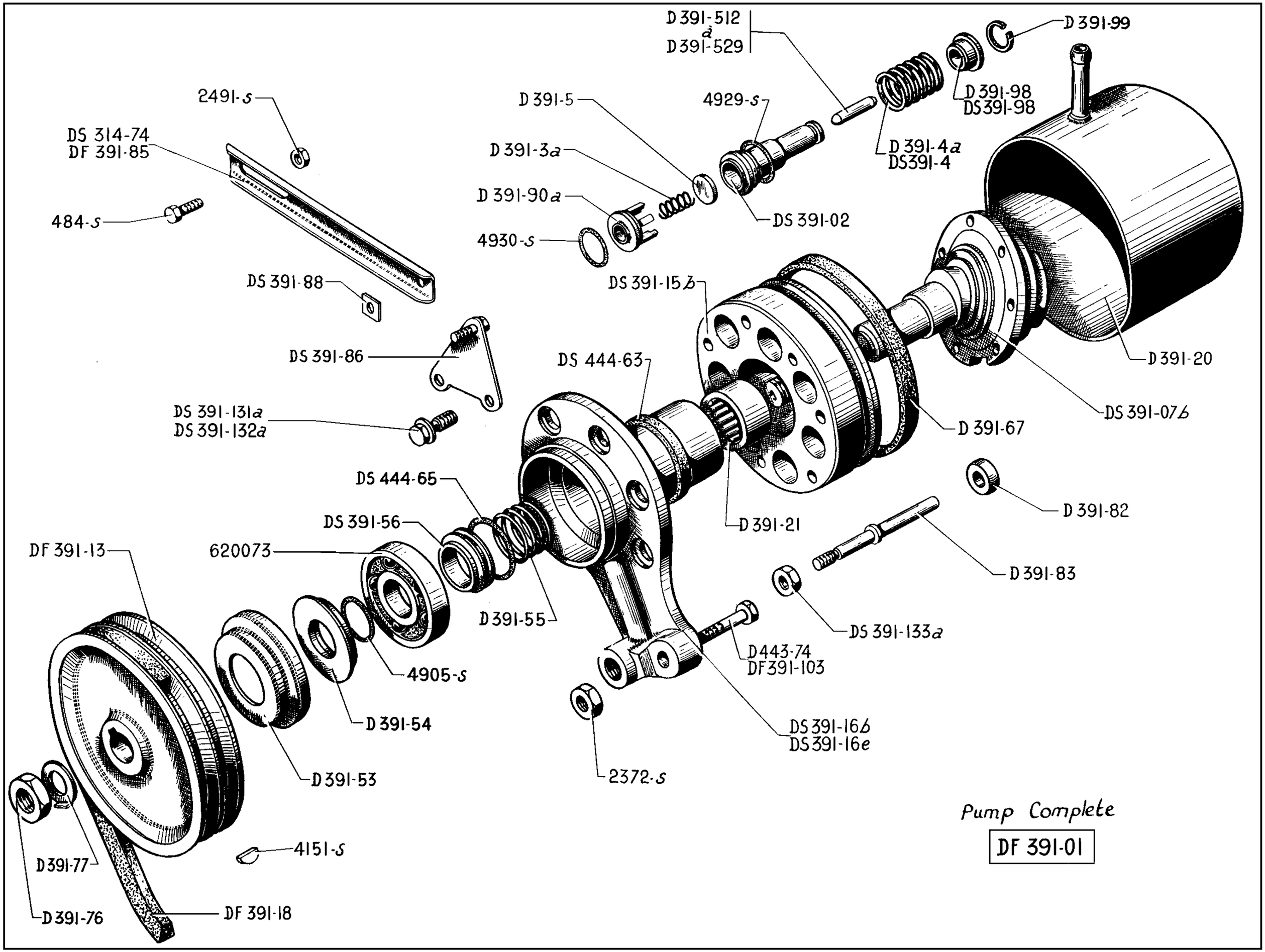
D 391-512
à
D 391-529
D 391-99
2491-s
D 391-5
4929-s
D 391-98
DS 391-98
DS 314-74
DF 391-85
D 391-3a
D 391-4a
DS391-4
D 391-90a
484-s
DS 391-02
4930-s
DS 391-88
DS 391-15b
DS 391-86
DS 444-63
D 391-20
DS 391-131a
DS 391-132a
DS 391-07b
D 391-67
DS 444-65
D 391-82
D 391-21
DS 391-56
DF 391-13
620073
D 391-83
D 391-55
DS 391-133a
D443-74
DF391-103
4905-s
D 391-54
DS 391-16b
DS 391-16e
D 391-53
2372-s
4151-s
D391-77
D 391-76
DF 391-18
Pump Complete
DF 391-01

NUMBER	DESCRIPTION	No. OFF
DS 391-131a	Screw, hex. head, 8 diameter x 25 mm long, securing bearing end plate.	4
DS 391-132a	Screw, hex. head, 8 diameter x 23 mm long, securing bearing end plate.	2
DS 391-133a	Nut, hex., 8 diameter x 100 pitch, securing bearing end plate.	1
	Piston rod for suspension pump:	7.
D 391-512	28.8 mm long.	
D 391-513	28.9 mm long.	
D 391-514	29 mm long.	
D 391-515	29.1 mm long.	
D 391-516	29.2 mm long.	
D 391-517	29.3 mm long.	
D 391-518	29.4 mm long.	
D 391-519	29.5 mm long.	
D 391-520	29.6 mm long.	
D 391-521	29.7 mm long.	
D 391-522	29.8 mm long.	
D 391-523	29.9 mm long.	
D 391-524	30 mm long.	
D 391-525	30.1 mm long.	
D 391-526	30.2 mm long.	
D 391-527	30.3 mm long.	
D 391-528	30.4 mm long.	
D 391-529	30.5 mm long.	
D 443-74	Screw, 9 diameter x 50 mm long, securing pump. Left-hand steering. Until June 1965. Right-hand steering. Until November 1962.	1

NUMBER	DESCRIPTION	No. OFF
DS 444-63	Ring seal, 27.7 x 33.1 x 2.7, between body and pump bearing end plate (R. VI).	1
DS 444-65	Ring seal, 21.3 x 28.5 x 3.6, on bush between bearing end plate and pump body.	1
484-S	Screw, hex. head, 7 diameter x 17.5 mm long, securing pump adjusting stay (R. III).	1
704	Packet of joints for high pressure pump.	1
2.372-S	Nut, hex., 9 diameter x 125 pitch, securing pump (R. III).	1
2.491-S	Nut, hex., 7 diameter x 100 pitch, securing pump adjusting stay (R. III).	1
4.151-S	Woodruff key, 3 x 3.7 x 10, for pump pulley (R. III).	1
4.905-S	Ring seal, 12.1 x 17.5 x 2.7, between deflector and shaft (R. VI). Until July 1964.	1

NUMBER	DESCRIPTION	No. OFF
4.929-S	*Ring seal, 18.7 x 22.5 x 1.9, for cylinders (R. VI). Until July 1964. Replaced by 4.986-S.*	7
4.930-S	*Ring seal, 15.7 x 21.1 x 2.7, for pump (R. VI). Until July 1964. Replaced by 4.987-S.*	7
4.983-S	Ring seal, 12.1 x 117.5 x 2.7, between deflector and pump shaft (R. III). Since July 1964.	1
4.985-S	Ring seal, 18.7 x 22.5 x 3, between pump body and pump cover (R. VI). Since April 1965.	1
4.986-S	Ring seal, 18.7 x 22.5 x 1.9, for cylinders (R. III). Since July 1964.	7
4.987-S	Ring seal, 15.7 x 21.1 x 2.7, for pump (R. III). Since July 1964.	7
620.073	Ball bearing, 12 x 50 x 16 (R. VI).	1

The numbers underlined indicate new parts which do not appear on the illustration.

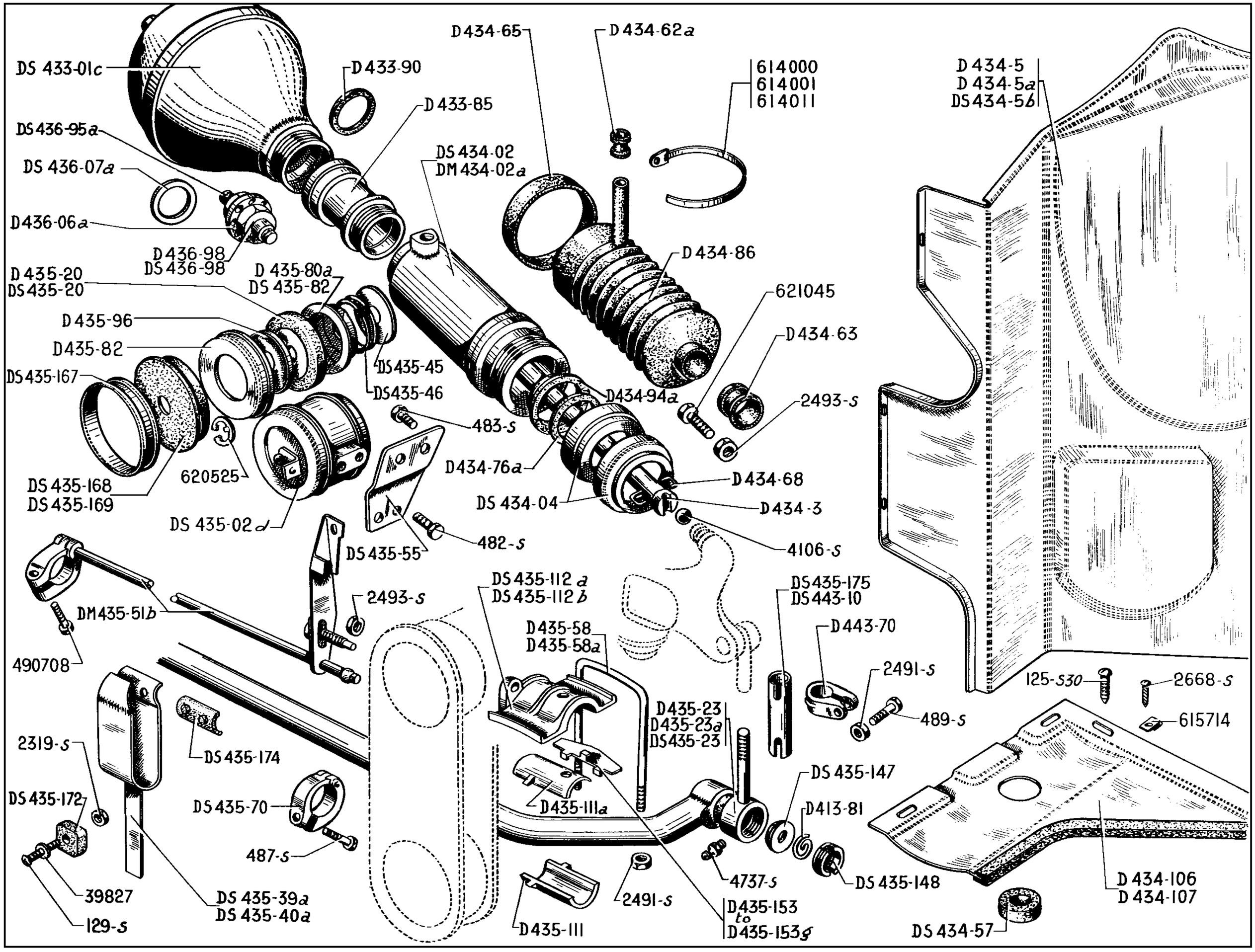
DS 433-01c
D 433-90
D 434-65
D 434-62a
614000
614001
614011
D 434-5
D 434-5a
DS 434-5b
DS 436-95a
D 433-85
DS 436-07a
DS 434-02
DM 434-02a
D 436-06a
D 436-98
DS 436-98
D 434-86
D 435-20
DS 435-20
D 435-80a
DS 435-82
621045
D 435-96
D 434-63
D 435-82
DS 435-167
DS 435-45
DS 435-46
D 434-94a
2493-s
483-s
D 434-76a
D 434-68
DS 435-168
DS 435-169
620525
DS 434-04
D 434-3
DS 435-02d
482-s
4106-s
DS 435-55
DS 435-112 a
DS 435-112 b
DS 435-175
DS 443-10
2493-s
DM 435-51b
D 435-58
D 435-58a
D 443-70
490708
2491-s
125-s30
2668-s
D 435-23
D 435-23a
DS 435-23
489-s
615714
2319-s
DS 435-174
DS 435-147
DS 435-172
D 435-111a
D 413-81
DS 435-70
487-s
4737-s
DS 435-148
39827
DS 435-39a
DS 435-40a
2491-s
D 434-106
D 434-107
129-s
D 435-111
D 435-153
to
D 435-153g
DS 434-57

NUMBER	DESCRIPTION	No. OFF
D 413-81	Spring for anti-roll bar ball pin, external diameter 25.5.	2
DS 443-01c	Suspension sphere (without damper).	2
D 433-85	Sleeve for suspension sphere, left-hand, threaded 36 diameter x 150 pitch.	1
D 433-90	Washer, rubber, 36 x 40 x 3.7, between cylinder and sphere.	3
DM 434-02a	*Suspension cylinder, right-hand. Replaced by DM 434-02c; order in addition: 1-DS 391-147a (R. VI), 1-D 434-62a, 2-D 391-105, 2-2.854s (R. VI), 2-2.555s (R. VI).*	1
DS 434-02	*Suspension cylinder, left-hand. Replaced by DS 434-02b; order in addition: 1-DS 391-147a (R. VI), 1-D 434-62a, 2-D 391-105, 2-2.854s (R. VI), 2-2.555s (R. VI).*	1
DS 434-04	Nut, 54 mm diameter x 150 pitch, with joint and cup for suspension cylinder.	2
D 434-3	Piston rod with pin.	2
D 434-5	*Shield for suspension mechanism, left-hand (side portion). Until October 1964. Replaced by DS 434-5c.*	1
D 434-5a	*Shield for suspension mechanism, right-hand (side portion). L.H. steering. Until October 1964. R.H. steering. Until October 1962. Replaced by DS 434-5d.*	1
DS 434-5b	*Shield for suspension mechanism, right-hand. R.H. steering. October 1962 - October 1964. Replaced by DS 435-5e.*	1
DS 434-5c	Shield for suspension mechanism, left-hand (side portion). Arrangement for tyres with wide tread. October 1964 - July 1965.	1
DS 434-5d	Shield for suspension mechanism, right-hand (side portion). Arrangement for tyres with wide tread. L.H. steering. October 1964 - July 1965.	1
DS 434-5e	Shield for suspension mechanism, right-hand, arrangement for tyres with wide tread. R.H. steering. Since October 1964.	1
DX 434-5a	Shield for suspension mechanism, left-hand (side portion). Since July 1965.	1
DX 434-5b	Shield for suspension mechanism, right-hand (side portion). Since July 1965.	1
DS 434-57	Washer, rubber, for suspension mechanism shield, 20 x 44 x 13.	2
D 434-62a	Protective bush under clip on return from cylinder to reservoir, 11.5 mm internal diameter.	2
D 434-63	Protective bush under clip on rubber dust cover on cylinder (control lever side), 25 mm internal diameter.	2
D 434-65	Flexible protective ring under clip securing cylinder rubber dust cover (cylinder end).	2
D 434-68	Pin connecting cylinder piston rod with lever (diameter of wire 2mm).	2
D 434-76a	Washer, felt, for sealing suspension cylinder, 34.5 x 46.5 x 6.	2
D 434-86	Dust cover, rubber, for cylinder, internal diameter 19 mm and 52 mm.	2
D 434-94a	Sealing joint for cylinder (34.4 x 44.5).	2
D 434-106	*Shield for suspension mechanism, left-hand (lower portion). Until October 1964. Replaced by DS 434-106a.*	1
DS 434-106a	Shield for suspension mechanism, L.H. (lower portion). Arrangement for tyres with wide tread. October 1964 - July 1965.	1
DX 434-106	Shield for suspension mechanism, left-hand (lower part). Since July 1965.	1
D 434-107	*Shielf for suspension mechanism, right-hand (lower portion). Until October 1964. Replaced by DS 434-107a.*	1
DS 434-107a	Shield for suspension mechanism, R.H. (lower portion). Arrangement for tyres with wide tread. October 1964 - July 1965.	1
DX 434-107	Shield for suspension mechanism, right-hand (lower part). Since July 1965.	1
DS 435-02d	Height corrector, with rapid return Since November 1961. Replaces earlier types.	1
D 435-20	Diaphragm for height corrector, 54 mm external diameter. Until November 1961.	2
DS 435-20	Diaphragm for height corrector, 3 mm hole on 6.2 mm length. Since November 1961.	2
D 435-23	*Anti-roll bar with end sockets. Until June 1961. Replaced by DS 435-23; order in addition: 1-DS 435-175.*	1
D 435-23a	*Anti-roll bar with end sockets and greasers. June 1961 - February 1962. Replaced by DS 435-23; order in addition: 1-DS 435-175.*	1
DS 435-23	Anti-roll bar with end sockets, 1 threaded 14 diameter x 125 left-hand pitch and 14 diameter x 125 right-hand pitch. Since February 1962.	1
DS 435-39a	Spring, anti-rattle, left-hand for anti-roll bar. Until July 1965.	1
DX 435-39a	Spring, anti-rattle, for anti-roll bar, length of securing clip 125 mm. Since July 1965.	2
DS 435-40a	Spring, anti-rattle, right-hand for anti-roll bar. Until July 1965.	1

The numbers underlined indicate new parts which do not appear on the illustration.

NUMBER	DESCRIPTION	No. OFF
DS 435-45	Valve for height corrector, 5.85 x 25 x 0.20 (R. VI). Since November 1961.	2
DS 435-46	Spring for height corrector valve (3 coils), internal diameter 21.5 mm. Since November 1961.	2
DM 435-51b	Rod complete controlling corrector. Until July 1965.	1
DX 435-51a	Rod, complete, controlling corrector thickness of control lever 4 mm. Since July 1965.	1
DS 435-55	Corrector bracket, 2 holes 7.75 mm diameter. Until July 1965.	1
DX 435-55	Corrector bracket, front, 2 securing holes 46.9 mm centres. Since July 1965.	1
D 435-58	U bolt, front, securing anti-roll bar bearing, 72 mm between centres.	2
D 435-58a	U bolt, rear, securing anti-roll bar bearing, 83 mm between centres. Until November 1961.	2
DS 435-70	Collar complete for anti-roll bar thrust.	2
D 435-80a	Cap for corrector, 5.5 diameter x 37 x 5.5 mm thick. Until November 1961.	2
D 435-82	Cap for corrector, 32 mm diameter x 58.5 x 12.5 mm thick. February 1960 - November 1961.	2
DS 435-82	Interior cup for tightening height corrector diaphragm, 4.90 mm thick. Since November 1961.	2
D 435-96	Cap for corrector, 5 diameter x 36 x 1.5 mm thick.	2
D 435-111	Half bearing, lower, for anti-roll bar, (nylon), 54 mm long (R. VI). Until July 1965.	2
D 435-111a	Half bearing, upper, for anti-roll bar (nylon), 52 mm long (R. VI). Until July 1965.	2

NUMBER	DESCRIPTION	No. OFF
DX 435-111	Half bearing, lower, for anti-roll bar (nylon), 2 interior grooves (R. VI). Since July 1965.	2
DX 435-111a	Half bearing, upper, for anti-roll bar (nylon), 2, 3 mm diameter holes, 2 interior grooves (R. VI). Since July 1965.	2
DS 435-112a	Bearing cap for anti-roll bar, right-hand, with bearing and dowel. Until July 1965.	1
DS 435-112b	Bearing cap for anti-roll bar, left-hand with bearing and dowel. Until July 1965.	1
DX 435-112	Bearing cap for anti-roll bar, left-hand, with bearing and dowel (fitted with lubricator). Since July 1965.	1
DX 435-112a	Bearing cap for anti-roll bar, right-hand, with bearing and dowel (fitted lubricator). Since July 1965.	1
DS 435-147	Thrust cap for anti-roll bar socket, 26 mm diameter x 5.4 mm thick.	2
DS 435-148	Nut, securing thrust cap in anti-roll bar socket, threaded 30 diameter x 150 pitch.	2
	Shim for adjusting anti-roll bar bearing:	As nec.
D 435-153	1 mm thick.	
D 435-153a	0.95 mm thick.	
D 435-153b	0.90 mm thick.	
D 435-153c	0.85 mm thick.	
D 435-153d	0.80 mm thick.	
D 435-153e	0.75 mm thick.	
D 435-153f	0.70 mm thick.	
D 435-153g	0.65 mm thick.	
DS 435-167	Retaining ring for rubber sealing cap for corrector, 61 mm external diameter. Since February 1960.	2
DS 435-168	Sealing cap, rubber, for corrector (nut end), diameter 49 x 63. Since February 1960.	1

NUMBER	DESCRIPTION	No. OFF
DS 435-169	Sealing cap, rubber, for corrector (bearing end), diameter 49 x 63, 1 hole 8 mm diameter. Since February 1960.	1
DS 435-172	Buffer, rubber, lateral, for anti-rattle spring, 5.5 x 27 x 12.	2
DS 435-174	Nylon bush for anti-rattle spring, 65 mm long (R. VI). Until July 1965.	2
DX 435-174	Bush, (nylon), for anti-rattle spring of anti-roll bar, 2 dowels 7.85 mm diameter x 4 mm high (R. VI). Since July 1965.	2
DS 435-175	Coupling sleeve, right-hand for anti-roll bar, threaded 14 diameter x 125 right-hand pitch, 61.5 mm long. Since February 1962.	1
D 436-06a	*Damper. Until March 1963. Replaced by DS 436-06e.*	2
DS 436-06e	Damper, front, with bleed hole (without mark). Since March 1963.	2
DS 436-07a	*Valve assembly for damper (1 washer and 2 valves) (R. VI). Until March 1963. No longer supplied.*	2
DS 436-07c	Set of valves for damper, front, Since March 1963.	2
DS 436-95a	Stud, 7 diameter x 30.5 long, for damper. June 1962 - March 1963.	2
DS 436-95b	Damper spindle, 7 x 100 x 31 mm long. Length smooth part 8.9 mm. Since March 1963.	2
D 436-98	*Nut, hex., 7 diameter x 100 pitch, for damper. Until June 1962. Replaced by DS 436-98.*	4
DS 436-98	Nut, hex., 7 diameter x 100 pitch, 8.2 mm thick for damper. Since June 1962.	4
DS 443-10	Sleeve for anti-roll bar adjustment, threaded 14 diameter x 125 left-hand and right-hand pitch, 80 mm long. - Since February 1962.	2 1

The numbers underlined indicate new parts which do not appear on the illustration.

NUMBER	DESCRIPTION	No. OFF
D 443-70	Clip securing adjustment sleeve for anti-roll bar.	4
125-S 30	Screw, round head, pointed, 5 diameter x 15 mm long, for securing suspension mechanism shield (R. III).	14
129-S	Screw, round head, 5 diameter x 25 mm long, securing anti-rattle spring side buffer (R. III).	2
482-S	Screw, hex. head, 7 diameter x 12.5 mm long, securing corrector to bracket (R. III).	2
483-S	Screw, hex. head, 7 diameter x 15 long, securing corrector bracket (R. III).	2
487-S	Screw, hex. head, 7 diameter x 25 mm long securing thrust collar for anti-roll bar (R. III).	2
489-S	Screw, hex. head, 7 diameter x 30 mm long, securing clip on anti-roll bar adjustment sleeve (R. III).	4
2.319-S	Nut, hex., 5 diameter x 75 long, securing lateral stop for anti-rattle spring (R. III).	2

NUMBER	DESCRIPTION	No. OFF
2.491-S	Nut, hex., 7 diameter x 100 pitch (R. III) securing:	
	- clip securing adjustment sleeve on anti-roll bar.	4
	- anti-roll bar bearing cap.	8
2.493-S	Nut, hex., 7 diameter x 100 pitch (R. III):	
	- for eccentric pin operating corrector.	1
	- securing cylinder.	4
2.668-S	Screw, P.K. round head, 3.5 diameter x 10 mm long, securing shield for suspension mechanism (R. VI).	4
4.106-S	Ball, 14.28 mm diameter for cylinder piston rod (R. VI).	2
4.737-S	Greaser for anti-roll bar. Since June 1961.	2
39.827	Washer, plain, 5.2 x 20 x 2, for side buffer of anti-rattle spring of anti-roll bar (R. IV).	2

NUMBER	DESCRIPTION	No. OFF
490.708	Screw, round head, 7 diameter x 22.5 mm long, for corrector control collar (R. I).	1
614.000	Clip securing rubber dust cover of cylinder, 474 mm long (R. VI).	2
614.001	Clip on return from cylinder to reservoir, 132 mm long (R. VI).	2
614.011	Clip securing cylinder rubber dust cover (control lever end), 240 mm long (R. VI).	2
615.714	Clip nut securing suspension mechanism shield (R. VI).	4
620.525	Circlips for height corrector valve, 5 x 9.85 x 0.6 (R. VI). Since November 1961.	2
621.045	Screw, hex. head, 7 diameter x 28 mm long, securing cylinder (R. II).	4

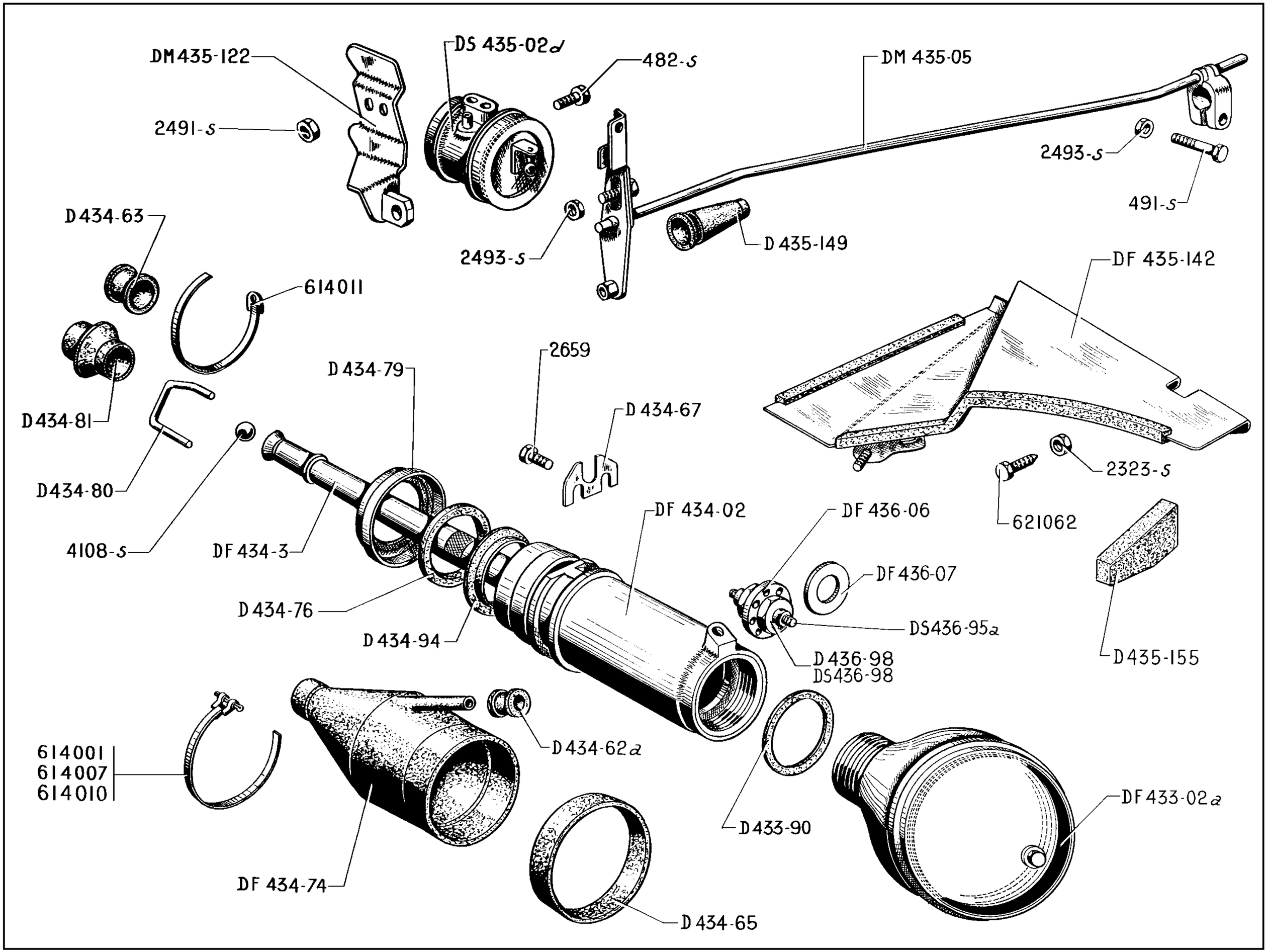
DM435-122
DS 435-02d
482-s
DM 435-05
2491-s
2493-s
491-s
2493-s
D 435-149
D 434-63
614011
DF 435-142
2659
D 434-79
D 434-67
D 434-81
2323-s
D 434-80
DF 434-02
DF 436-06
621062
4108-s
DF 434-3
DF 436-07
D 434-76
DS436-95a
D 434-94
D 436-98
DS436-98
D 435-155
614001
614007
614010
D 434-62a
DF 433-02a
D 433-90
DF 434-74
D 434-65

NUMBER	DESCRIPTION	No. OFF
DF 332-02a	Suspension sphere (without damper).	2
D 443-90	Joint, rubber, 36 x 40 x 3.7, between cylinder and sphere.	2
DF 434-02	*Suspension cylinder. Replaced by DF 434-02a; order in addition: 1-DS 391-147a (R. VI). 1-D 434-62a, 2-D 391-105, 2-2.854-S (R. VI), 2-2.555-S (R. VI).*	2
DF 434-3	Rod for suspension piston, 255 mm long.	2
D 434-62a	Protective ring under clip on return from cylinder to reservoir, 11.5 mm internal diameter.	2
D 434-63	Protective ring under clip on piston rod dust cover, 25 mm internal diameter.	2
D 434-65	Protective ring, flexible under clip on cylinder dust cover (cylinder end).	2
D 434-67	Support for suspension cylinder.	2
DF 434-74	Dust cover, rubber, for cylinder, 54 and 57 internal diameters.	2
D 434-76	Sealing ring, felt, for suspension cylinder. 39.5 x 47.5 x 6.5.	2
D 434-79	Cap for suspension cylinder, 64.3 mm external diameter.	2
D 434-80	Pin connecting cylinder piston rod with lever, wire diameter 3 mm.	2
D 434-81	Dust cover, rubber, for cylinder piston rod.	2
D 434-89	Nut, 59 x 150, for suspension cylinder.	2

NUMBER	DESCRIPTION	No. OFF
D 434-94	Sealing ring for cylinder, 39 x 53.	2
DS 435-02d	Height corrector for suspension with rapid return. Since November 1961. Replaces earlier type.	1
DM 435-05	Rod for corrector control.	1
DM 435-122	Corrector bracket with bearing.	1
DF 435-142	Protection plate for corrector.	1
D 435-149	Sealing sleeve on corrector control rod, 6 x 36 x 60.	1
D 435-155	Sealing pad, rubber, between corrector body and protection plate (R. VI).	1
DF 436-06	*Damper (marked AR 2). Until March 1963. Replaced by DF 436-06a.*	2
DF 436-06a	Damper, rear, with bleed hole (marked AR 2). Since March 1963.	2
DF 436-07	*Valve assembly for rear damper (2 washers and 3 valves) (R. VI). Until March 1963. No longer supplied.*	2
DF 436-07a	Set of valves for rear damper. Since October 1963.	2
DS 436-95a	Stud, 7 diameter x 30.5 long, for damper. June 1962 - March 1963.	2
DS 436-95b	Damper spindle, 7 x 100 x 31 mm long. Smooth part 8.9 mm long. Since March 1963.	2
D 436-98	*Nut, hex., 7 diameter x 100 pitch for damper. Until June 1962. Replaced by DS 436-98.*	4
DS 436-98	Nut, hex., 7 diameter x 100 pitch, 8.2 mm thick, for damper. Since June 1962.	2
482-S	Screw, hex. head, 7 diameter x 12.5 long, securing corrector on bracket (R. III).	2

NUMBER	DESCRIPTION	No. OFF
491-S	Screw, hex. head, 7 diameter x 35 mm long, locking clip on corrector control rod (R. III).	1
2.323-S	Nut, hex., 5 diameter x 75 pitch, securing corrector protection plate (R. III).	1
2.491-S	Nut, hex., 7 diameter x 100 pitch, securing corrector bracket (R. III).	2
2.493-S	Nut, hex., 7 diameter x 100 pitch (R. III) securing:	
	- clip on corrector control rod.	1
	- eccentric pin of corrector control.	1
2.659	*Screw, hex. head, 5 diameter x 13 long, securing retaining plate for cylinder (R. III). Replaced by 283-S.*	2
4.108-S	Ball, 15.875 mm diameter for cylinder piston rod (R. VI).	2
614.001	Clip for return from cylinder to reservoir, 132 mm long (R. VI).	2
614.007	Clip for cylinder dust cover, 190 mm long (R. VI).	2
614.010	Clip for cylinder dust cover, 504 mm long (R. VI).	2
614.011	Clip for piston rod dust cover, 240 mm long (R. VI).	2
621.062	Screw, hex. head, 5 diameter x 14 mm long, securing corrector protection plate (R. III).	2

The numbers underlined indicate new parts which do not appear in the illustration.

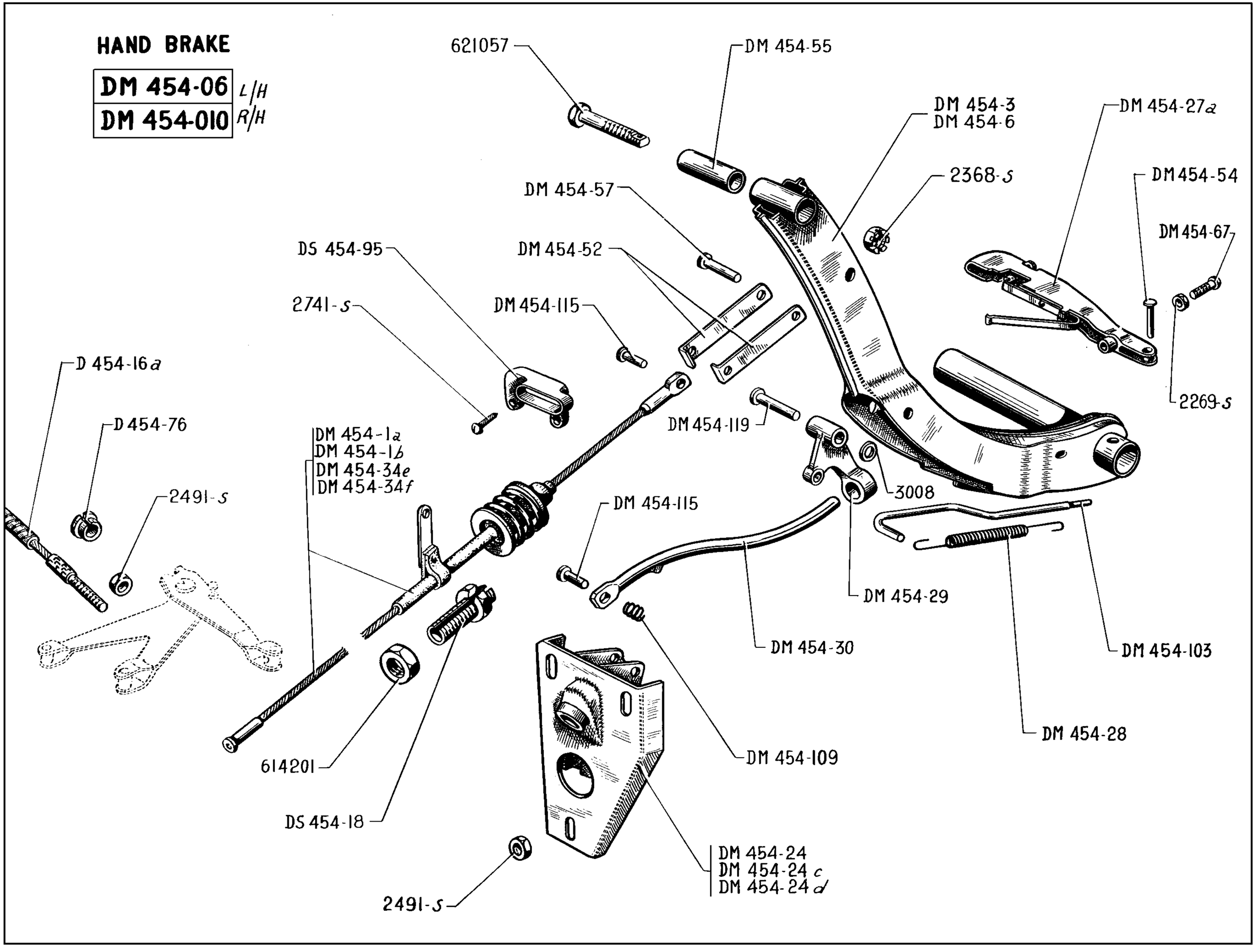
HAND BRAKE
DM 454-06 L/H
DM 454-010 R/H
621057
DM 454-55
DM 454-3
DM 454-6
DM 454-27a
2368-S
DM 454-54
DM 454-57
DM 454-67
DS 454-95
DM 454-52
2741-S
DM 454-115
D 454-16a
2269-S
DM 454-119
D 454-76
DM 454-1a
DM 454-1b
DM 454-34e
DM 454-34f
3008
2491-S
DM 454-115
DM 454-29
DM 454-30
DM 454-103
DM 454-28
614201
DM 454-109
DS 454-18
DM 454-24
DM 454-24 c
DM 454-24 d
2491-S

NUMBER	DESCRIPTION	No. OFF
DM 454-06	Lever for handbrake, complete with release handle, L.H. steering.	1
DM 454-010	Lever for handbrake, complete with release handle, R.H. steering.	1
DM 454-1a	Cable for mechanical brake, 910 mm long. L.H. steering. Until July 1962.	1
DM 454-1b	Cable for mechanical brake, 910 mm long, length of sheath 620 mm. L.H. steering. Since July 1962.	1
DM 454-3	Lever for handbrake. L.H. steering.	1
DM 454-6	Lever for handbrake. R.H. steering.	1
D 454-16a	Cable for connecting handbrake, 620 mm long (R. VI).	1
DS 454-16a	Cable for connecting handbrake, (R. VI) (Germany). Since October 1963.	1
DS 454-18	Thrust block for sheath, adjustable, for brake cable with welded nut. (R. VI).	1
DM 454-24	Bracket for thrust block for sheath and ratchet on handbrake, L.H. Steering. Until July 1962.	1
DM 454-24c	*Bracket for thrust block for sheath and ratchet on handbrake (length of bracket for sheath 50 mm). L.H. steering. July 1962 - January 1965. Replaced by DM 454-24d.*	1
DM 454-24d	Bracket for thrust block for sheath and ratchet on handbrake (2 holes 18 mm under top slot). R.H. steering. October 1962 - July 1965 L.H. steering. January 1965 - July 1965.	1

NUMBER	DESCRIPTION	No. OFF
DM 454-24e	Bracket for thrust block for sheath and ratchet on handbrake (securing hole centres 125 mm and 69 mm, 1 slot 18.35 x 12.35) L.H. steering Since July 1965.	1
DM 454-24f	Bracket for thrust block for sheath and ratchet on handbrake (securing hole centres 125 mm and 69 mm, 2 slots 18.35 x 12.35). R.H. steering. Since July 1965.	1
DM 454-27a	Release handle for handbrake (with reinforcement).	1
DM 454-28	Spring for handbrake lock, 8 mm external diameter.	1
DM 454-29	Lock for handbrake.	1
DM 454-30	Ratchet for locking handbrake, 10 mm diameter.	1
DM 454-34e	Brake cable with adjustable thrust block, R.H. steering. Length of sheath 1,245 mm. Until October 1962.	1
DM 454-34f	Brake cable with adjustable thrust block, length of sheath 1.215 m. R.H. steering. Since October 1962.	1
DM 454-52	Half rod for brake cable, 97 mm long.	2
DM 454-54	Clevis pin for handbrake release handle, 4 x 23.	1
DM 454-55	Distance piece, 9 x 13 x 34, for securing handbrake (R. VI).	1
DM 454-57	Clevis pin for brake cable rod, 7 x 26.2.	1
DM 454-67	Screw, round head, 4 diameter x 16 mm long, for adjusting handbrake release rod.	1
D 454-76	End sleeve for handbrake connecting cable, internal diameter 8.5 x 18 mm long.	2

NUMBER	DESCRIPTION	No. OFF
DS 454-95	Grommet protecting brake cable (R. VI).	1
DM 454-103	Release rod for handbrake.	1
DM 454-109	Retaining spring for handbrake ratchet, 7.3 mm internal diameter.	2
DM 454-115	Clevis pin for securing:	
	- handbrake ratchet, 7 x 24.	1
	- brake cable.	1
DM 454-119	Clevis pin for locking handbrake, 6 x 38.5.	1
2.269-S	Nut, hex., 4 diameter x 75 pitch, for adjusting screw of handbrake release rod (R. III).	1
2.368-S	Nut, hex., castellated, 9 diameter x 125 pitch, for securing handbrake lever (R. III).	1
2.491-S	Nut, hex., 7 diameter x 100 pitch (R. III):	
	- for securing handbrake bracket.	3
	- for brake connection cable.	2
2.741-S	Screw, round head, Parker, 4.85 x 9.5 mm long, for securing handbrake protection grommet (R. VI).	2
3.008	Washer, 6.25 x 12.1 for handbrake locking pin (R. II).	1
614.201	Nut, hex., 16 diameter x 150 pitch, for locking adjustable thrust block (R. II).	1
621.057	Screw, 9 diameter x 50 mm long, for securing handbrake lever (R. II).	1

The numbers underlined indicate new parts which do not appear on the illustration.

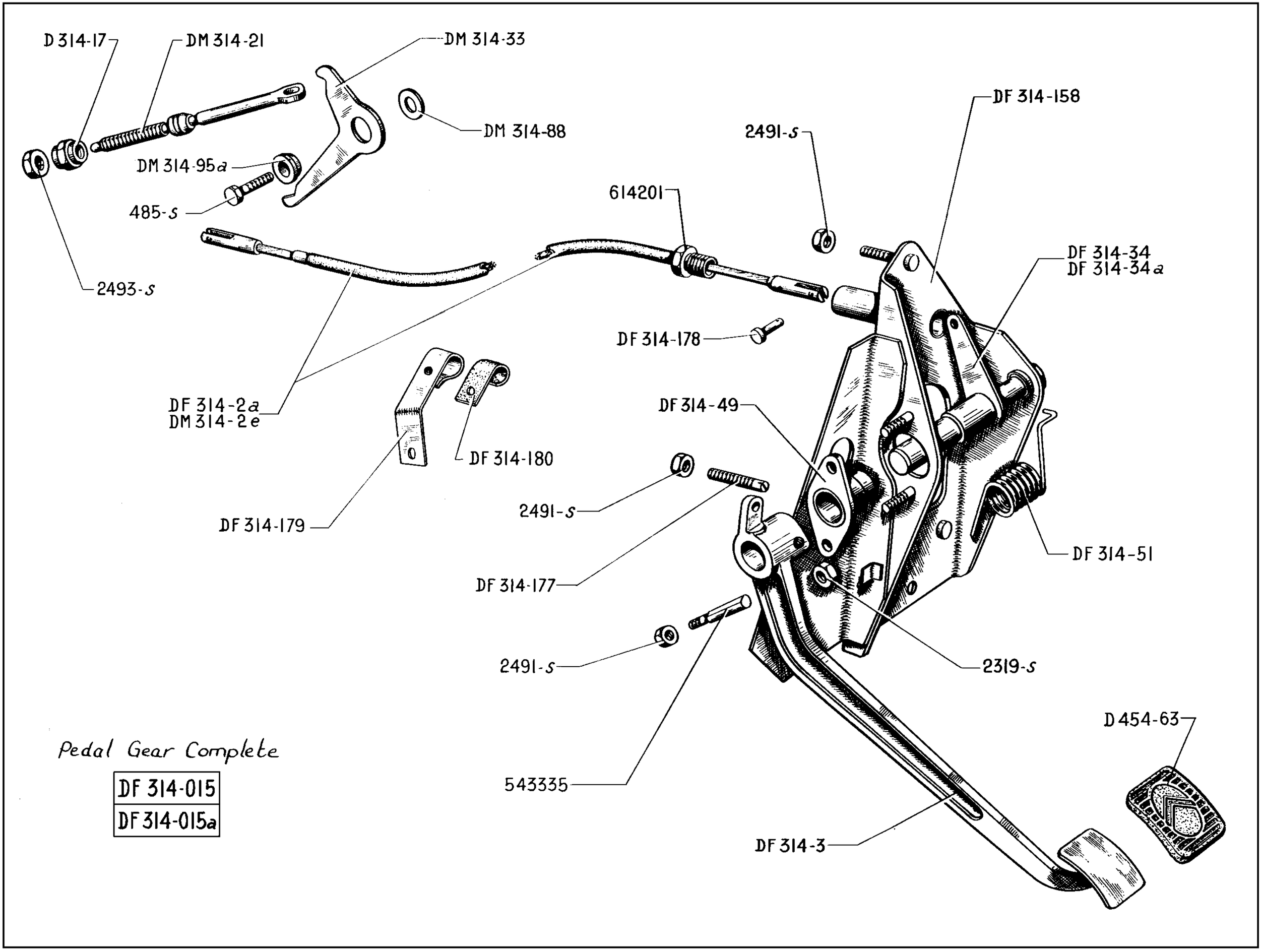

Pedal Gear Complete

DF 314-015
DF 314-015a

NUMBER	DESCRIPTION	No. OFF
DF 314-015	*Pedal gear, complete with clutch pedal. Until December 1962. Replaced by DF 314-015a; order in addition: DM 314-2e (R. VI).*	1
DF 314-015a	Pedal gear, complete with clutch pedal (thickness of lever 3.5 mm). December 1962 - June 1964.	1
DF 314-015b	Pedal gear, complete with clutch pedal (3 point fixing). Since June 1964.	1
DF 314-2a	*Cable for clutch 587 mm long (R.VI). Until November 1962. Replaced by DM 314-2e; order in addition: 1-DF 314-34a.*	1
DM 314-2e	Cable for clutch, 590 mm long, fork machined to 3.8 mm with pin (R. VI). Since November 1962.	1
DF 314-3	Clutch pedal. Until June 1964.	1
DF 314-3c	Clutch pedal with spindle. Since June 1964.	1
D 314-17	Nut, hex., 7 diameter x 100 pitch, for adjusting clutch fork.	1
DM 314-21	*Push-rod, adjustable, for clutch threaded 7 diameter x 100 pitch. x 136 mm long. Until February 1963. Replaced by DM 314-21a.*	1
DM 314-21a	Push-rod, adjustable, for clutch, threaded 7 diameter x 100 pitch (with pin in end piece) (R. VI). Since February 1963.	1

NUMBER	DESCRIPTION	No. OFF
DM 314-33	*Lever controlling adjustable clutch push-rod. Until April 1964. Replaced by DM 314-33a.*	1
DM 314-33a	Lever controlling adjustable clutch push-rod, 72.5 and 42.5 between centres x 3.75 mm thick. Since April 1964.	1
DF 314-34	*Shaft for clutch pedal with lever, 114 mm long (thickness of lever 2.5 mm). Until December 1962. Replaced by DF 314-34a; order in addition: 1-DM 314-2e (R. VI).*	1
DF 314-34a	Shaft for clutch pedal with lever, 114 mm long (thickness of lever 3.5 mm). December 1962 - June 1964.	1
DF 314-49	End plate, L.H. on clutch pedal bracket with bearing, distance between holes: 44 mm. Until June 1964.	1
DF 314-51	Return spring for clutch pedal, right-hand winding, diameter of wire 3.3 mm. Until June 1964.	1
DM 314-51b	Return spring for clutch pedal, right-hand winding, 11 turns. Since June 1964.	1
DM 314-88	Thrust washer, 7.2 x 22 x 2, for adjustable clutch push-rod control lever.	1
DM 314-95a	*Bush for adjustable clutch push-rod control lever, 7.2 x 20 x 6.2. Until April 1964. Replaced by DM 314-95b.*	1
DM 314-95b	Bush for adjustable clutch push-rod control lever, 7.2 x 20 x 7.2. Since April 1964.	1
DM 314-109	Distance piece for clutch control lever (7 x 10 x 12.6). Since June 1964.	1
DF 314-158	Bracket for clutch pedal. Until June 1964.	1

NUMBER	DESCRIPTION	No. OFF
DF 314-158a	Bracket for clutch pedal, pedal for pedal spindle welded. Since June 1964.	1
DF 314-177	Screw for clutch pedal thrust block, 41 mm long, threaded 7 diameter x 100 pitch (R. VI).	1
DF 314-178	Pin for securing clutch cable, 5 diameter x 12 mm long.	1
DF 314-179	Retaining clip for clutch cable.	1
DF 314-180	Rubber lining for clutch cable clip, 14 x 58 x 1.5.	1
D 453-129	Support for sealing sleeve on pedal gear.	1
DM 453-189	Sealing covering for pedal gear (polyurethane). Since June 1964.	1
D 454-63	Rubber covering for pedal.	1
485-S	Screw, hex. head, 7 diameter x 20 mm long for securing control lever for adjustable clutch push-rod (R. III).	1
2.319-S	Nut, hex., 5 diameter x 75 pitch, for securing end plate, L.H. (R. III).	2
2.491-S	Nut, hex., 7 diameter x 100 pitch (R. III) for securing:	
	- clutch pedal cotter.	1
	- screw for pedal thrust block.	1
	- pedal bracket.	
	Until June 1964.	4
	Since June 1964.	3
2.493-S	Nut, hex., 7 diameter x 100 pitch, for locking adjusting nut for clutch fork (R. III).	1
543.335	Cotter, 7 diameter x 100 pitch x 44 mm long, for clutch pedal (R. II).	1
614.201	Nut, hex., 16 diameter x 150 pitch, for locking adjustable stop (R. II).	1

The numbers underlined indicate new parts which do not appear on the illustration.

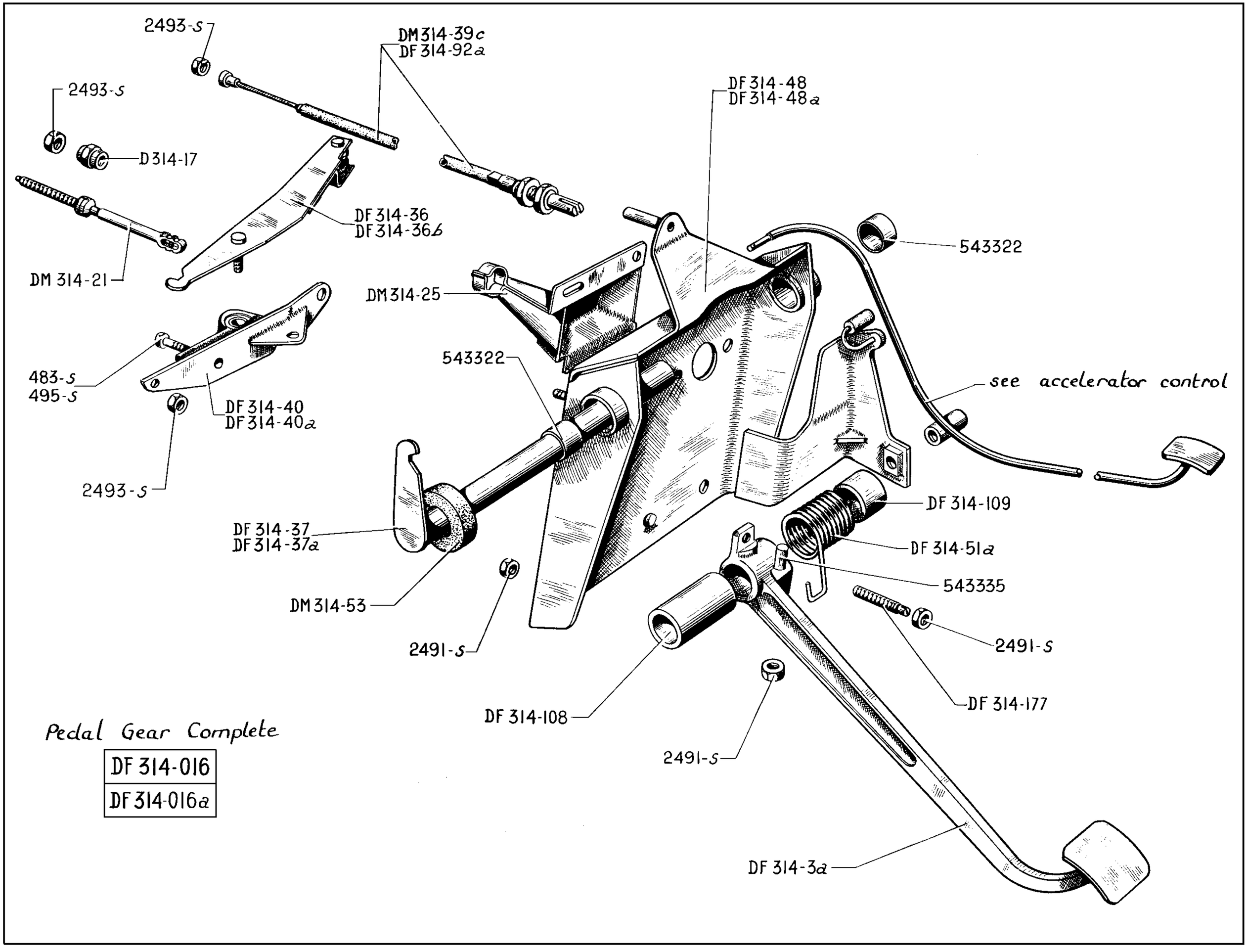

Pedal Gear Complete

DF 314-016
DF 314-016a

NUMBER	DESCRIPTION	No. OFF
	Until October 1962	
DF 314-016	Pedal gear, complete. Until January 1962.	1
DF 314-016a	*Pedal gear, complete (3 welded screws). Since January 1962. No longer supplied.*	1
DF 314-3a	*Clutch pedal. No longer supplied.*	1
D 314-17	Nut, hex., 7 diameter x 100 pitch, for adjusting clutch fork.	1
DM 314-21	*Push-rod, adjustable, for clutch, threaded 7 diameter x 100 pitch x 136 mm long. Replaced by DM 314-21a.*	1
DM 314-25	Support for clutch cable, sheath stop, 2 holes 7.5 mm, 1 slot. Since January 1962.	1
DF 314-36	Lever controlling adjustable clutch push-rod. Until January 1962.	1
DF 314-36b	Lever controlling adjustable clutch push-rod. Since January 1962.	1
DF 314-37	Shaft for pedal with clutch lever, 196 mm long. Until January 1962.	1

NUMBER	DESCRIPTION	No. OFF
DF 314-37a	Shaft for pedal with clutch lever, length from notch to shaft centre 46 mm. Since January 1962.	1
DM 314-39c	Clutch cable, length of sheath 229 mm (R. VI). Since January 1962.	1
DF 314-40	*Support, swivelling, for lever controlling adjustable push-rod. Until January 1962. No longer supplied.*	1
DF 314-40a	Support, swivelling, for lever controlling adjustable push-rod. Since January 1962.	1
DF 314-48	Clutch pedal bracket. Until January 1962.	1
DF 314-48a	Clutch pedal bracket (3 welded screws). Since January 1962.	1
DF 314-51a	Return spring for clutch pedal, 9 coils. L.H. winding.	1
DM 314-53	Sealing ring, rubber, for pedal shaft, 25 x 53 x 20 (R. VI).	1
DF 314-92a	Clutch cable, 335 mm long (R. VI). Until January 1962.	1

NUMBER	DESCRIPTION	No. OFF
DF 314-108	Distance piece for pedal gear, 18 x 24 x 48.5.	1
DF 314-109	Distance piece for pedal gear, 18 x 26 x 18.5.	1
DF 314-177	Screw for clutch pedal thrust block, 41 mm long, threaded 7 diameter x 100 pitch (R. VI).	1
483-S	Screw, hex. head, 7 diameter x 15 mm long, for securing swivelling bracket (R. III).	1
495-S	Screw, hex. head, 7 diameter x 45 mm long, for securing swivelling bracket (R. III).	1
2.491-S	Nut, hex., 7 diameter x 100 pitch (R. III) for securing:	
	- clutch pedal cotter.	1
	- pedal bracket.	3
	- screw for pedal thrust block.	1
2.493-S	Nut, hex., 7 diameter x 100 pitch (R. III):	
	- for swivelling bracket.	2
	- for clutch cable.	2
543.322	Bush, 18 x 22 x 17, for pedal bracket (R. VI).	2
543.335	Cotter, threaded 7 diameter x 100 pitch x 44 mm long, for clutch pedal (R. II).	1

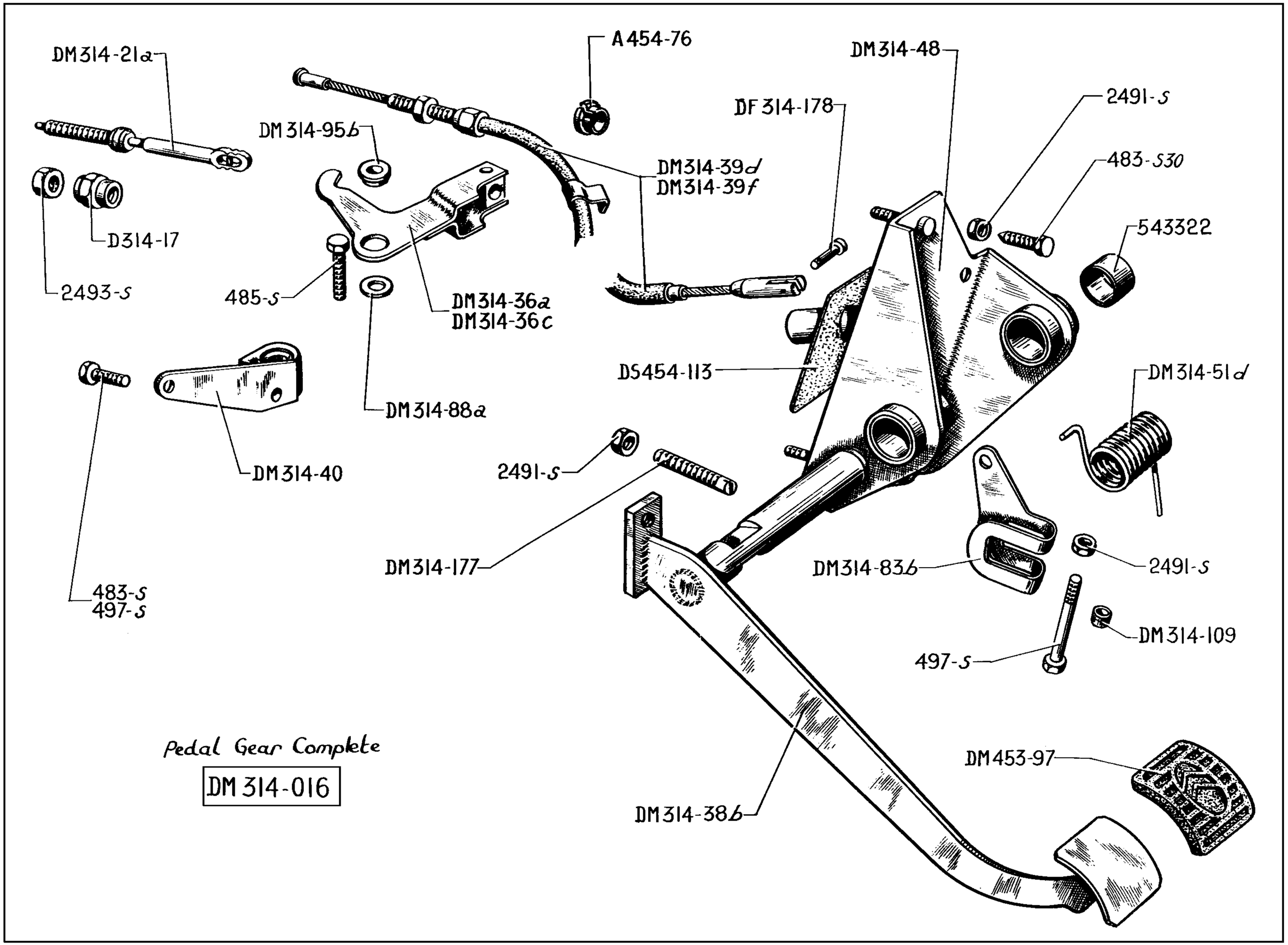

Pedal Gear Complete

DM 314-016

NUMBER	DESCRIPTION	No. OFF
	Since October 1962	
A 454-76	Thrust block, 8.5 x 12 x 17 for clutch cable sheath.	1
DM 314-016	Pedal gear complete.	1
D 314-17	Nut, hex., 7 diameter x 100 pitch, for adjusting clutch fork.	1
DM 314-21a	Push-rod, adjustable, for clutch, threaded 7 diameter x 100 pitch (with pin in end sleeve) (R. VI).	1
DM 314-36a	Lever controlling adjustable clutch push-rod. Until November 1962.	1
DM 314-36c	Lever controlling adjustable clutch push-rod. Since November 1962.	1
DM 314-38b	Clutch pedal (with 94 mm long shaft).	1
DM 314-39d	Clutch cable. Length of sheath 410 mm (R. VI). Until November 1962.	1
DM 314-39f	Clutch cable with clip, length of sheath 385 mm (R. VI). Since November 1962.	1

NUMBER	DESCRIPTION	No. OFF
DM 314-40	Bracket, swivelling, for lever controlling adjustable push-rod (R. VI).	1
DM 314-48	Clutch pedal bracket, 2 welded screws.	1
DM 314-51d	Spring for clutch pedal, 11 coils, L.H. winding (R. VI).	1
DM 314-83b	Lever for clutch control.	1
DM 314-88a	Thrust washer, 7.2 x 18 x 2, for adjustable push-rod control lever.	1
DM 314-95b	Bush for adjustable push-rod control lever, 7.2 x 20 x 7.2.	1
DM 314-109	Distance piece for lever of clutch control, 7 x 10 x 12.6.	1
DM 314-177	Screw for adjustment of clutch pedal. Threaded 7 x 100 pitch. Length 35 mm.	1
DF 314-178	Pin for securing clutch cable, 5 diameter x 12 mm long.	1
DM 453-97	Covering for pedal.	1

NUMBER	DESCRIPTION	No. OFF
DS 454-113	Rubber sealing cover for pedal gear, 45 x 80 x 1 (R. VI).	1
483-S	Screw, hex. head, 7 x 15 mm, for securing swivelling bracket for adjustable push-rod control lever (R. III).	1
483-S 30	Screw, hex. head, pointed end, 7 x 15, for securing the pedal gear (R. III).	2
485-S	Screw, hex. head, 7 diameter x 20 mm long, for securing control lever for adjustable clutch push-rod (R. III).	1
497-S	Screw, hex. head, 7 x 50 (R. III) for securing:	
	- clutch control lever.	1
	- swivelling bracket for adjustable push-rod control lever.	1
2.491-S	Nut, hex., 7 x 100 (R. III) for screw securing:	
	- clutch control lever.	1
	- pedal adjustment.	1
	- pedal gear.	2
2.493-S	Nut, hex., 7 x 100 for clutch cable (R. III).	2
543.322	Bush, 18 x 22 x 17, for pedal bracket (R. VI).	2

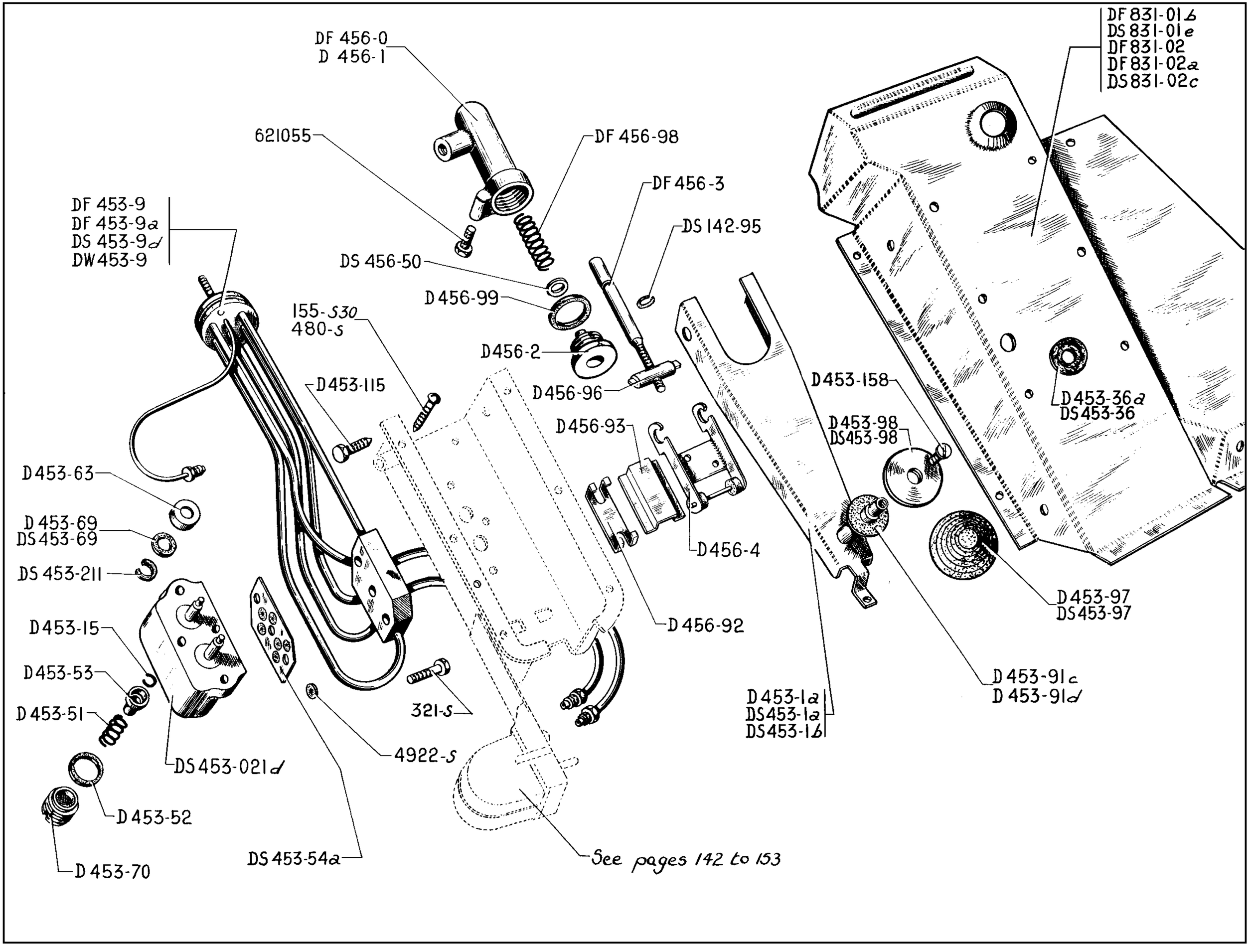
DF 456-0
D 456-1
621055
DF 456-98
DF 456-3
DS 142-95
DS 456-50
D 456-99
D456-2
D456-96
DF 453-9
DF 453-9a
DS 453-9d
DW 453-9
155-S30
480-S
D453-115
D456-93
D453-158
D453-98
DS453-98
D453-36a
DS453-36
DF 831-01b
DS 831-01e
DF 831-02
DF 831-02a
DS 831-02c
D453-63
D 453-69
DS 453-69
DS 453-211
D456-4
D 456-92
D453-97
DS453-97
D453-15
D453-53
D453-51
321-S
4922-S
D453-1a
DS453-1a
DS453-1b
D 453-91c
D 453-91d
DS 453-021d
D 453-52
D 453-70
DS 453-54a
See pages 142 to 153

NUMBER	DESCRIPTION	No. OFF
DS 142-95	Ring seal, 5.7 x 9.1 x 1.7, for braking distributor plug (R. VI).	1
DS 453-021d	Brake control body with valves (assembled with felt joints). Since July 1961. Replaces previous model; order in addition: 2-DS 453-69.	1
D 453-1a	Brake pedal, 9 mm pedal pad rod (without pad). Until July 1961.	1
DS 453-1a	Brake pedal (without pad) pedal pad rod 36 mm long. July 1961 - September 1962.	1
DS 453-1b	Brake pedal (without pad) pedal pad rod 32 mm long. Since September 1962.	1
DF 453-9	Piping assembly for brake control, 2 flanges, 2 screwed unions, L.H. steering. Until September 1962.	1
DF 453-9a	Piping assembly for brake control, 2 flanges, 2 screwed unions, R.H. steering. Until September 1961.	1
DS 453-9d	Piping assembly for brake control, 2 flanges, 2 screwed unions, L.H. steering. Since September 1962.	1
DW 453-9	Piping assembly for brake control, 2 flanges, 2 screwed unions, R.H. steering. Since September 1961.	1
D 453-15	Circlip for brake control valve.	2
D 453-36a	Bush, rubber,protecting brake pedal pad rod, 14 x 20, internal diameter x 36 mm external diameter. Until July 1961.	1
DS 453-36	Bush, rubber, protecting brake pedal pad rod, 5.5 mm thick. Since July 1961.	1
D 453-51	Return spring for brake control valve, 8.5 mm internal diameter.	2
D 453-52	Joint, rubber, 20 x 24 x 3.5, for hydraulic brake control.	2

NUMBER	DESCRIPTION	No. OFF
D 453-53	Thrust washer, for brake control valve return spring, 6.4 x 8.4. x 14.65 x 7.	2
DS 453-54a	Sealing plate for flange of brake control piping assembly, 6 holes of 7.6 mm diameter, secured at 3 points 6 mm diameter (R. VI).	1
D 453-63	Thrust cap for brake control valve joint, 6.45 x 20 x 4.	2
D 453-69	Ring seal, rubber, for hydraulic brake control valve, 6 x 17.5 x 3.5 (R. VI). Until July 1961.	2
DS 453-69	Ring seal, felt, for hydraulic brake control valve, 6.35 x 13.2 x 1. Since July 1961.	2
D 453-70	Cap for brake control, threaded 24 diameter x 150 pitch.	2
	Washer, rubber, for taking-up clearance on pedal pad rod, 10 x 36:	As nec.
D 453-91c	1 mm thick.	
D 453-91d	3 mm thick.	
D 453-97	Pad for brake pedal, 27 mm internal diameter. Until July 1961.	1
DS 453-97	Pad for brake pedal, 42 mm internal diameter. Since July 1961.	1
D 453-98	Thrust ring for brake pedal, threaded 9 diameter x 125 pitch. Until July 1961.	1
DS 453-98	Thrust ring for brake pedal, threaded 9 diameter x 125 pitch, 61 mm diameter. Since July 1962.	1
D 453-115	Articulating spindle for brake pedal, 7 diameter x 16 mm long.	2
D 453-158	Screw, countersunk head, 4 diameter x 11 mm long retaining pedal pad.	1
DS 453-211	Spacing washer, split rubber, between sleeve and sealing joint for slide operating hydraulic brake, 6.9 x 9.5 x 2.4. Until July 1961.	2

NUMBER	DESCRIPTION	No. OFF
DF 456-0	Braking distributor.	1
D 456-1	Braking distributor body.	1
D 456-2	Guide cap for braking distributor, threaded 16 diameter x 150 pitch.	1
DF 456-3	Slide valve for braking distributor, 6.35 mm diameter x 78 mm long.	1
D 456-4	Trolley for braking distributor.	1
DS 456-50	Thrust washer, 7 x 11.25 x 1, for braking distributor spring.	1
D 456-92	Retaining plate for distributor trolley.	1
D 456-93	Compensator plate for distributor trolley, 25 x 34.	1
D 456-96	Spindle for braking distributor control rod, 9 diameter x 32 mm long.	1
DF 456-98	Spring for braking distributor, diameter of wire 2.4.	1
D 456-99	Joint, rubber, for braking distributor, 16 x 20.4 x 4.	1
DF 831-01b	Pedal panel with brake control (1 drain pipe), L.H. steering. July 1961 - September 1962. Replaces previous model.	1
DS 831-01e	Pedal panel with brake control. Since September 1962.	1
DF 831-02	Pedal panel with brake control. R.H. steering. Until September 1961.	1
DF 831-02a	Pedal panel with brake control. R.H. steering. September 1961 - October 1962.	1
DS 831-02c	Pedal panel with brake control, support bracket welded. R.H. steering. Since October 1962.	1
155-S 30	Screw, pointed, 5 diameter x 15 mm long, for securing brake control (R. III).	2
321-S	Screw, hex. head, 6 diameter x 30 mm long, for securing brake control flange (R. III).	1
480-S	Screw, hex. head, for securing brake control, 7 diameter x 14 mm long (R. III).	2
708	Packet of joints for hydraulic brake control.	1
4.922-S	Ring seal, 4.2 x 8 x 1.9, for sealing plate (R. VI).	6
621.055	Screw, hex. head, 5 diameter x 11 mm long, for securing distributor (R. I).	2

The numbers underlined indicate new parts which do not appear on the illustration.

132 - PIPING FOR SUSPENSION

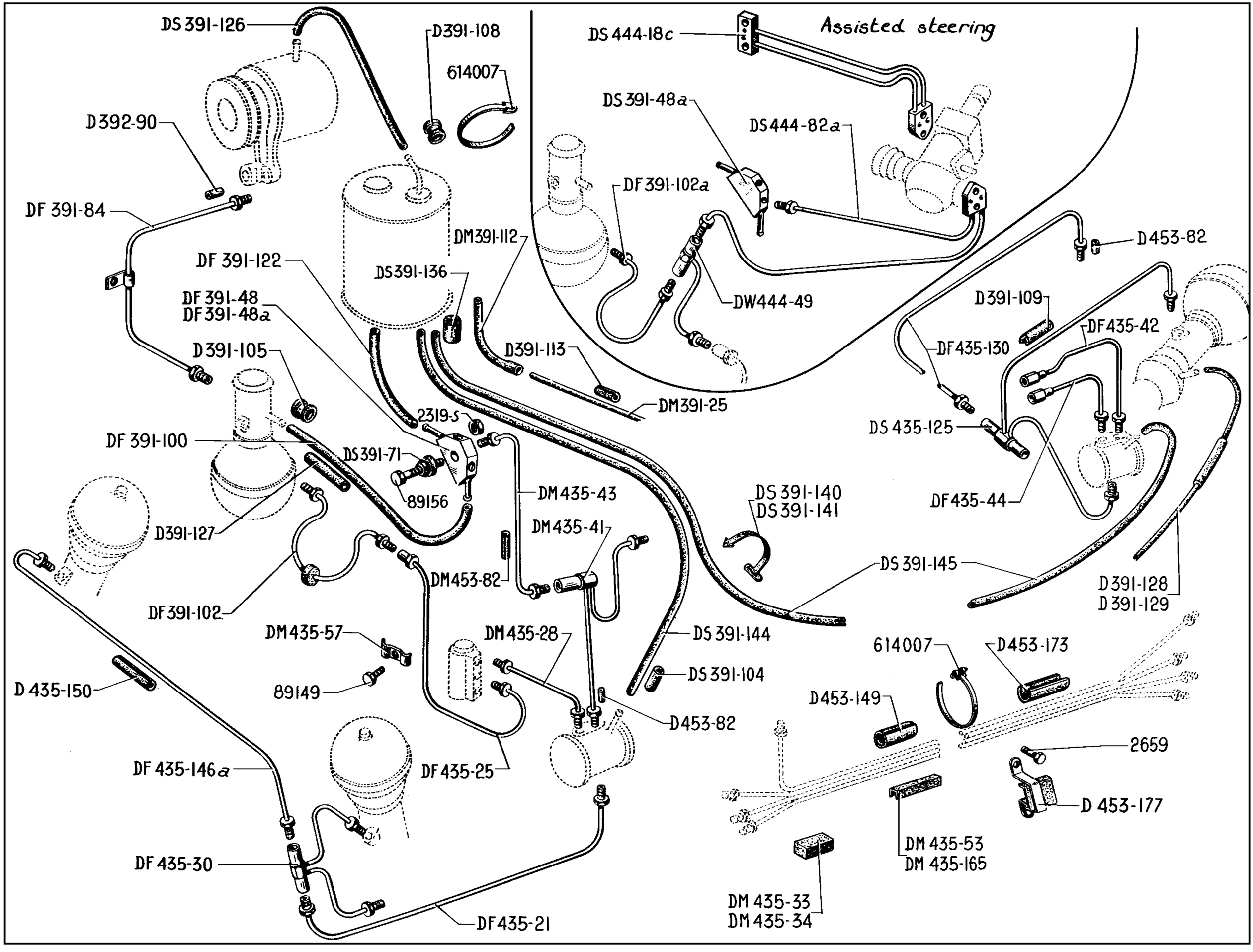

NUMBER	DESCRIPTION	No. OFF
DS 334-93	Tube, rubber, 7 x 14, for return pipe for correctors, between return pipe assembly and 4-way union, 320 mm long. Assisted steering. Since October 1963. All Types. Since February 1964.	1
DM 391-25	Piping, flexible, for suspension overflow return.	1
DF 391-48	4-way union for suspension (2 tubes). Until September 1960.	1
DF 391-48a	3-way union for suspension (2 tubes). September 1960 - June 1963.	1
DM 391-48	*3-way union "Nylon" for suspension (2 tubes 11 mm diameter, 1 tube 6.5 mm diameter). June 1963-February 1964. Replaced by DM 391-48a; order in addition: 1-DS 334-93, 1-DS 435-41b.*	1
DM 391-48a	3-way union "Nylon" for suspension (2 tubes 11 mm diameter, 1 tube 8 mm diameter) (R.VI). Since February 1964.	1
DS 391-48a	*4-way union for suspension (2 tubes). Assisted steering. Until June 1963. Replaced by DS 391-48c (R.VI); order in addition: 1-DS 391-45b, 1-DS 314-195, 1-DS 334-93, 1-DS 435-41b, 1-DS 444-82b.*	1
DS 391-48b	*4-way union "Nylon" for suspension. Assisted steering. June 1963-October 1963. Replaced by DS 391-48c; order in addition: 1-DS 334-93, 1-DS 435-41b.*	1
DS 391-48c	4-way union "Nylon" for suspension (2 tubes 11 mm diameter, 1 tube 8 mm diameter, 1 tube 6.5 mm diameter) (R. VI). Assisted steering. Since October 1963.	1
DS 391-71	Rubber block support for 3-way union. September 1960 - July 1965.	1
DF 391-84	Tube complete, connecting pump and pressure regulator.	1
DF 391-100	Tube, rubber, connecting pressure regulator to 4-way union, 430 mm long. Until June 1963.	1
DM 391-100a	Tube, rubber, 7 x 14, for connecting pressure regulator to 3-way union, internal diameter 7 mm and 10 mm, 235 mm long. Since June 1963.	1
DF 391-102	Tube, for connecting pressure regulator and distribution unit (pressure regulator side).	1

NUMBER	DESCRIPTION	No. OFF
DF 391-102a	Tube, for connecting pressure regulator and distribution unit (pressure regulator side). Assisted steering.	1
DS 391-104	Sleeve, rubber, coupling overflow return to corrector, 8 x 29.	2
D 391-105	Bush, flexible, under tightening clip, 15 mm internal diameter:	
	- for tube connecting pressure regulator to 4-way union and reservoir.	4
	- for flexible union for overflow return.	1
D 391-108	Bush, flexible, under tightening clip, 19 mm internal diameter:	
	- for tube connecting pump to reservoir.	2
	- for rubber union for overflow return.	1
D 391-109	Sleeve, rubber, for protecting pipe on support for suspension cylinder, 48 mm long.	2
DM 391-112	Union, rubber, for suspension overflow return, internal diameter 7 and 11 x 880 mm long.	1
D 391-113	Bush, split, rubber, for securing overflow return pipe, 8 x 12 x 15.	11
DF 391-122	Tube, rubber, 7 x 14 x 945 mm long between 4-way union and reservoir. Until June 1963.	1
DM 391-122a	Tube, rubber, 7 x 14, between 3-way union and reservoir, internal diameter 7 mm and 10 mm, 945 mm long. Since June 1963.	1
DS 391-126	Tube, rubber, 11 x 18 x 800 mm long, between pump and reservoir.	1
D 391-127	Sleeve, for protecting flexible tube connecting pressure regulator to 4-way union.	1
D 391-128	Sleeve, L. H. side, protecting overflow return pipe of rear suspension cylinder, 250 mm long.	1
D 391-129	Sleeve, R. H. side, protecting overflow return pipe of rear suspension cylinder, 390 mm long.	1
DS 391-136	Sleeve, rubber, for coupling overflow return from correctors on reservoir, 18 x 42.	1

NUMBER	DESCRIPTION	No. OFF
DS 391-140	Collar, rubber, for height corrector overflow return, 46 mm long.	7
DS 391-141	Collar, rubber, for height corrector overflow return, 77 mm long.	4
DS 391-144	Tube, Rilsan, for front corrector over flow return, 1200 mm long (R. VI).	1
DS 391-145	Tube, Rilsan, for rear corrector overflow return, 4200 mm long (R. VI).	1
D 392-90	Sleeve, rubber, 6 x 11 x 11, for pipe union between pump and pressure regulator.	2
DX 394-48	Support, rubber, for 4-way union, 32 mm and 19 mm diameter x 19 mm high. Since July 1965.	1
DX 394-120	Return pipe assembly from correctors, front and rear, 1 3-way union, 1 2-way union, 1 screwed union, with output adjustment. Since July 1965.	1
DX 394-121a	Feedpipe for front suspension, right and left-hand. Since July 1965.	1
DX 394-122	Feedpipe for front corrector. Since July 1965.	1
DF 435-21	*Feedpipe for front suspension, L.H. and R.H. 2 screwed unions. October 1964 - July 1965. Replaced by DW 435-21.*	1
DW 435-21	Feedpipe for front suspension, right and left-hand, 2 screwed unions. Arrangement for tyres with wide tread. October 1964 - July 1965.	1
DF 435-25	Tube connecting pressure regulator to distribution unit (distribution side), 1 2-way union, 1 screwed union.	1
DM 435-28	Feedpipe for front corrector. Until July 1965.	1
DF 435-30	*Feedpipe assembly for L.H. front suspension. Until December 1963. Replaced by DF 435-30a; order in addition: 1-DS 392-85a.*	1
DF 435-30a	Suspension feedpipe assembly, front, L.H. 1 4-way union, 1 2-way union, 1 screwed union. Since December 1963.	1

The numbers underlined indicate new parts which do not appear on the illustration.

NUMBER	DESCRIPTION	No. OFF
DM 435-33	Closing plug for L.H. side cross-member, 60 x 40 x 35 (R. VI).	2
DM 435-34	Closing plug for R.H. side cross-member, 60 x 50 x 40 (R. VI).	1
DM 435-41	Return pipe assembly for correctors. - 1 3-way union. - 1 2-way union. - 1 screwed union. July 1961 - June 1963. Replaces previous model; order in addition: 1-DM 435-43.	1
DS 314-195	Rubber tube, 5 x 11, connecting steering pipe assembly to 4-way union, 150 mm long. Assisted steering. Since June 1963.	1
DS 435-41	*Return pipe assembly for correctors (1 union 3-way with tubes 6.5 mm, 1 union 2-way, 1 screwed union. June 1963 - February 1964. Assisted steering. Until October 1963. Replaced by DS 435-41b.*	1
DS 435-41b	Return pipe assembly for correctors (1 union 3-way with tube 8 mm, 1 union 2-way, 1 screwed union). Assisted steering. October 1963 - July 1965. All Types. February 1964 - July 1965.	1
DF 435-42	Return tube for rear corrector (rear part): - 1 2-way union. - 1 screwed union. Until July 1961.	1
DM 435-43	Return tube for correctors, 3-way union, 2 screwed unions. July 1961 - June 1963. Replaces previous model; order in addition: 1-DM 435-41.	1
DS 435-43	Tube, rubber, 5 x 11, for return from correctors, between return pipe assembly and union, 4-way 310 mm long. June 1963 - February 1964. Assisted steering. Until October 1963.	1
DF 435-44	Feed tube for rear corrector: - 1 2-way union. - 1 screwed union. Until July 1961.	1

NUMBER	DESCRIPTION	No. OFF
DM 435-53	Sleeve, rubber, for protecting front feed tube, 40 mm long.	3
DM 435-57	Clip, double, for securing pressure regulator pipe and corrector pipe.	1
DS 435-125	Pipe assembly for connecting L.H. rear suspension: - 1 4-way union.	1
DF 435-130	Feed tube for R.H. rear suspension - 2 screwed unions.	1
DF 435-146a	Feedpipe, R.H. front suspension: - 2 screwed unions.	1
D 435-150	Sleeve, rubber, protecting suspension feedpipe, 4 x 9 x 15.	4
DM 435-165	Sleeve, rubber, for protecting suspension piping, 147 mm long.	2
DS 444-18c	Piping for control of rack. Assisted steering. L.H. steering.	1
DW 444-49	Connecting tube for feed to steering: - 1 3-way union. - 1 screwed union. Assisted steering. Until June 1963.	1
DS 444-68a	Piping for control of rack. Assisted steering. R.H. steering.	1
DS 444-82a	Piping for control of rack: - 2 screwed unions. - 1 flange. Assisted steering. Until June 1963.	1
DS 444-82b	Piping for control of rack: - 1 screwed union. - 1 tube 6.35, 1 flange. Assisted steering. Since June 1963.	1
D 453-82	Sleeve, rubber, for union, 4.5 x 6.5 x 11.	As nec.
DM 453-82	Sleeve, 14 x 19, for protecting suspension tube (R. VI).	5
D 453-149	Sleeve, for protecting general rear piping, 15 x 20 x 80.	1
D 453-173	Sleeve, for protecting general rear piping, 50 mm long.	1
D 453-177	Clip with rubber pad for securing general rear piping, 53 mm between centres.	1

NUMBER	DESCRIPTION	No. OFF
2.319-S	Nut, hex., 5 x 75, for securing 3-way union (R. III). Since September 1960.	1
2.659	*Screw, hex. head, 5 x 13 (R. III) for securing:* *- bracket for suspension piping.* *- clip for front feed pipe.* *Replaced by 283-S.*	 3 1
89.149	Screw, hex. head, 5 diameter x 18 mm long, for double clip securing pressure regulator tube (R. III).	1
89.156	Screw, hex. head, 5 x 40, for securing 3-way union (R. III). Since September 1960.	1
614.007	Clip, 190 mm long (R. VI) securing: - sleeve protecting general rear piping. - pipe connecting pump to reservoir.	 1 2
	PROTECTIVE PLUGS	
D 391-60	Plug, rubber, for pressure regulator (return side), 7.5 x 12 x 20 (R. VI).	1
D 391-63	Plug, rubber, for pressure regulator (operating side) and for corrector.	5
D 391-88	Plug, rubber, for pressure regulator (inlet side).	1
D 433-82	Plug, for suspension sphere, threaded 36 x 150.	1
D 434-70	Plug for suspension cylinder (sphere end), external thread 36 diameter x 150 pitch.	1
D 435-91	Plug, rubber, for corrector (overflow return), 3 x 8 x 10 (R. VI).	1
D 453-131	Protective cap for 4.5 mm pipe (R. VI).	As nec.
D 453-132	Protective cap for 6.35 mm tube (R. VI).	As nec.

The numbers underlined indicate new parts which do not appear on the illustration.

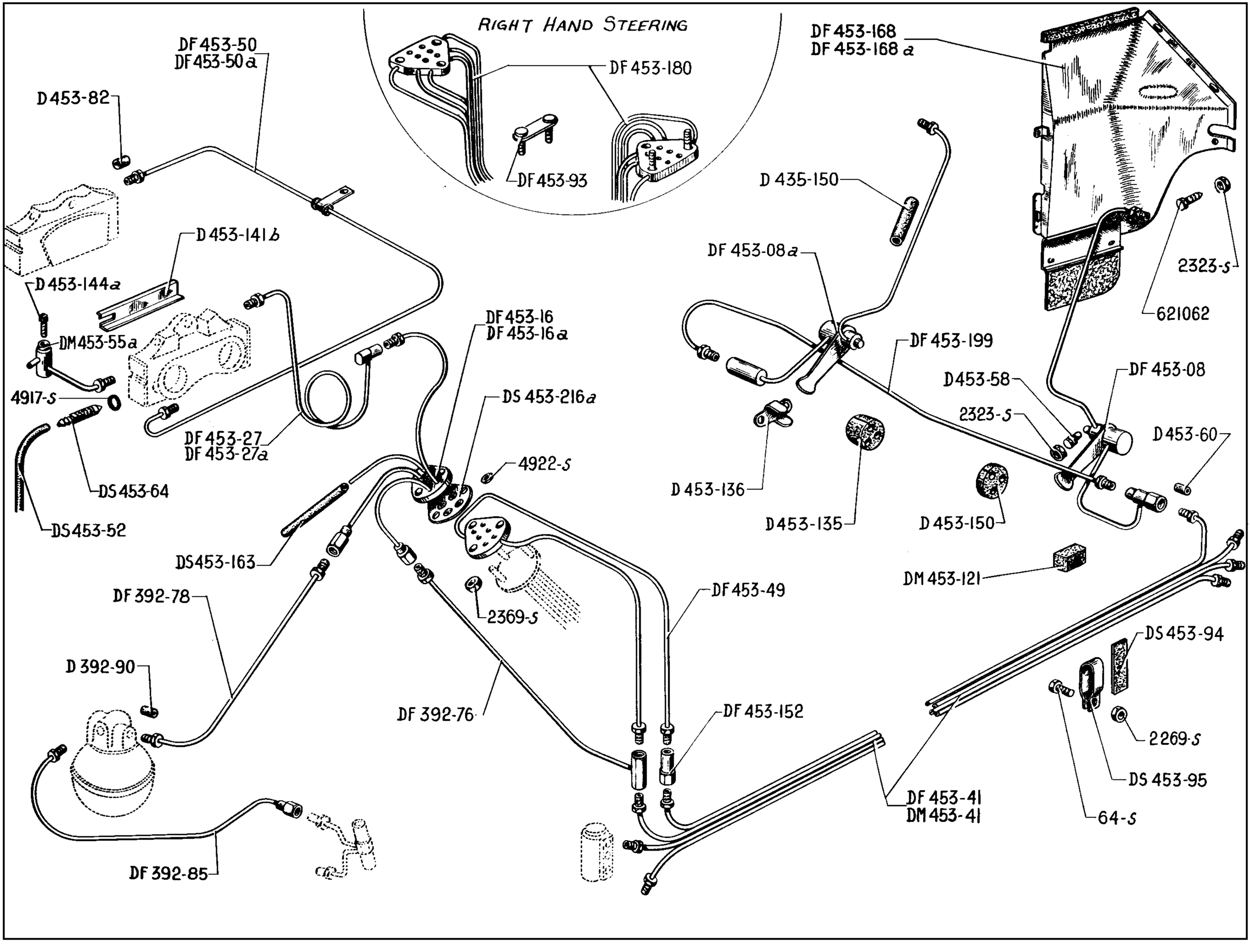
RIGHT HAND STEERING
DF 453-180
DF 453-93
DF 453-50
DF 453-50a
D 453-82
D 453-141b
D 453-144a
DM 453-55a
4917-S
DS 453-64
DS 453-52
DF 453-27
DF 453-27a
DS 453-163
DF 392-78
D 392-90
DF 392-85
DF 453-16
DF 453-16a
DS 453-216a
4922-S
2369-S
DF 392-76
DF 453-49
DF 453-152
DF 453-168
DF 453-168a
D 435-150
DF 453-08a
DF 453-199
D 453-58
2323-S
D 453-136
D 453-135
D 453-150
DM 453-121
2323-S
621062
DF 453-08
D 453-60
DS 453-94
2269-S
DS 453-95
64-S
DF 453-41
DM 453-41

NUMBER	DESCRIPTION	No. OFF
DF 392-76	Feed tube for rear brake, 1 3-way union, 1 screwed union.	1
DF 392-78	Tube connecting brake accumulator to pedal gear (brake accumulator side), 2 screwed unions.	1
DF 392-85	Tube for brake accumulator, 1 2-way union, 1 screwed union. Until December 1963.	1
DS 392-85a	Tube for supplying brake accumulator, 2 screwed unions. Since December 1963.	1
D 392-90	Sleeve, rubber, from accumulator piping to pedal gear, 6 x 11 x 11.	1
D 435-150	Sleeve, rubber, for protecting rear brake piping, 4 x 9 x 15.	2
DF 453-08	Swivelling pipe, complete, for L.H. rear brake.	1
DF 453-08a	Swivelling pipe, complete, for R.H. rear brake.	1
DF 453-16	Piping assembly between accumulator and pedal gear: - 2 2-way unions. - 2 screwed unions. - 1 flange. Until September 1962.	1
DF 453-16a	Piping assembly between accumulator and pedal gear: - 1 flange, 2 screwed unions, 2 2-way unions. Since September 1960.	1
DF 453-27	Feed tube for front brake: - 1 2-way union. - 1 screwed union. Until September 1962.	1
DF 453-27a	*Feed tube for front brake. Since September 1962. Replaced by DF 457-27.*	1
DF 453-41	General piping for rear circuit (rear part): - 8 screwed unions. Until July 1961.	1
DM 453-41	*General piping for rear circuit, 4 pipes. Since July 1961. Replaced by DF 453-41; order in addition: 1-DF 435-42, 1-DF 435-44.*	1

NUMBER	DESCRIPTION	No. OFF
DF 453-49	General piping for brake circuit and for suspension circuit (front part): - 1 flange. - 2 screwed unions.	1
DF 453-50	Piping for front brake: - 2 screwed unions. Until September 1962.	1
DF 453-50a	Piping for front brake. Since September 1962.	1
DS 453-52	Flexible tube, 5 x 7 x 400 for bleed screw, front brake (R. VI). Since January 1961.	1
DM 453-55a	*Bleed tube for front brake. Until January 1961. Replaced by DS 453-64; order in addition: DS 453-52 (R. VI).*	1
D 453-58	Screw, 5 diameter x 21.5 mm long, for locking rear swivelling union.	2
D 453-60	Sleeve, rubber, for pipe union, 6.5 x 10 x 11.	As nec.
DS 453-64	Bleed screw for front brake with joint, threaded 9 x 125, x 38 mm. Since January 1961.	1
D 453-82	Sleeve, rubber, for pipe union, 4.5 x 6.5 x 11.	As nec.
DF 453-93	Fixing plate for securing retaining clip on brake circuit assembly, 2 screws 43 mm between centres. R.H. steering.	2
DS 453-94	Pad, rubber, 20 x 50 x 2, beneath clip holding rear general piping.	1
DS 453-95	Clip holding rear general piping.	1
DM 453-121	Protector, rubber, for articulated piping on L.H. rear brake (R. VI).	1
D 453-135	Sealing plug, rubber, for piping leading to rear wheel (3 holes). Until February 1963.	2
DS 453-135	Sealing plug for hole for piping leading to rear wheel, 18 mm internal diameter, 2 holes 4.5 mm, 1 hole 8 mm (R. VI). Since February 1963.	2
D 453-136	Clip for holding rear articulated piping, 29 mm between centres.	2
D 453-141b	Support for bleed pipe on front R.H. brake unit. Until January 1961.	1
D 453-144a	Bleed screw on front brake unit, threaded 5 diameter x 75 mm long. Until January 1961.	1

NUMBER	DESCRIPTION	No. OFF
D 453-150	Plug, rubber, for holding rear piping, 35 mm diameter x 20 mm thick.	1
DF 453-152	2-way union for brake piping, threaded 9 diameter x 125 pitch and 12 diameter x 125 pitch.	1
DS 453-163	Rubber tube, 5 x 11 x 980 mm long, coupling pedal gear to reservoir. Since September 1960.	1
DF 453-168	Shield protecting piping for rear L.H. brake.	1
DF 453-168a	Shield protecting piping for rear R.H. brake.	1
DF 453-180	Feed pipe assembly for brake circuit, 2 flanges, 6 pipes. R.H. steering. Until December 1963.	1
DF 453-180a	Feed pipe assembly for brake circuit. R.H. steering. Since December 1963.	1
DF 453-199	Feed tube for rear brakes: - 2 screwed unions.	2
DS 453-216a	Sealing plate for brake control feed pipe assembly flange, 6 holes of 7.6 mm diameter (R. VI).	2
64-S	Screw, round head, 4 diameter x 12.5 mm long, for securing clip holding general rear piping (R. III).	1
2.269-S	Nut, hex., 4 x 75, for securing clip holding general rear piping (R. III).	1
2.323-S	Nut, hex., 5 x 75 pitch (R. III): - for screw securing rear swivel union. - for securing shield protecting rear swivel piping.	 2 5
2.369-S	Nut, hex., 6 x 100 for securing the flange of the brake control pipe assembly (R. III).	2
4.917-S	Ring seal, 3.4 x 7.2 x 1.9 for front brake bleed screw (R. VI). Since January 1961.	1
4.922-S	Ring seal, 4.2 x 8 x 1.9, for sealing plate on brake control pipe assembly flange (R. VI).	12
621.062	Screw, hex. head, 5 diameter x 14 mm long, for securing shield protecting swivel rear piping (R. III).	6

The numbers underlined indicate new parts which do not appear on the illustration.

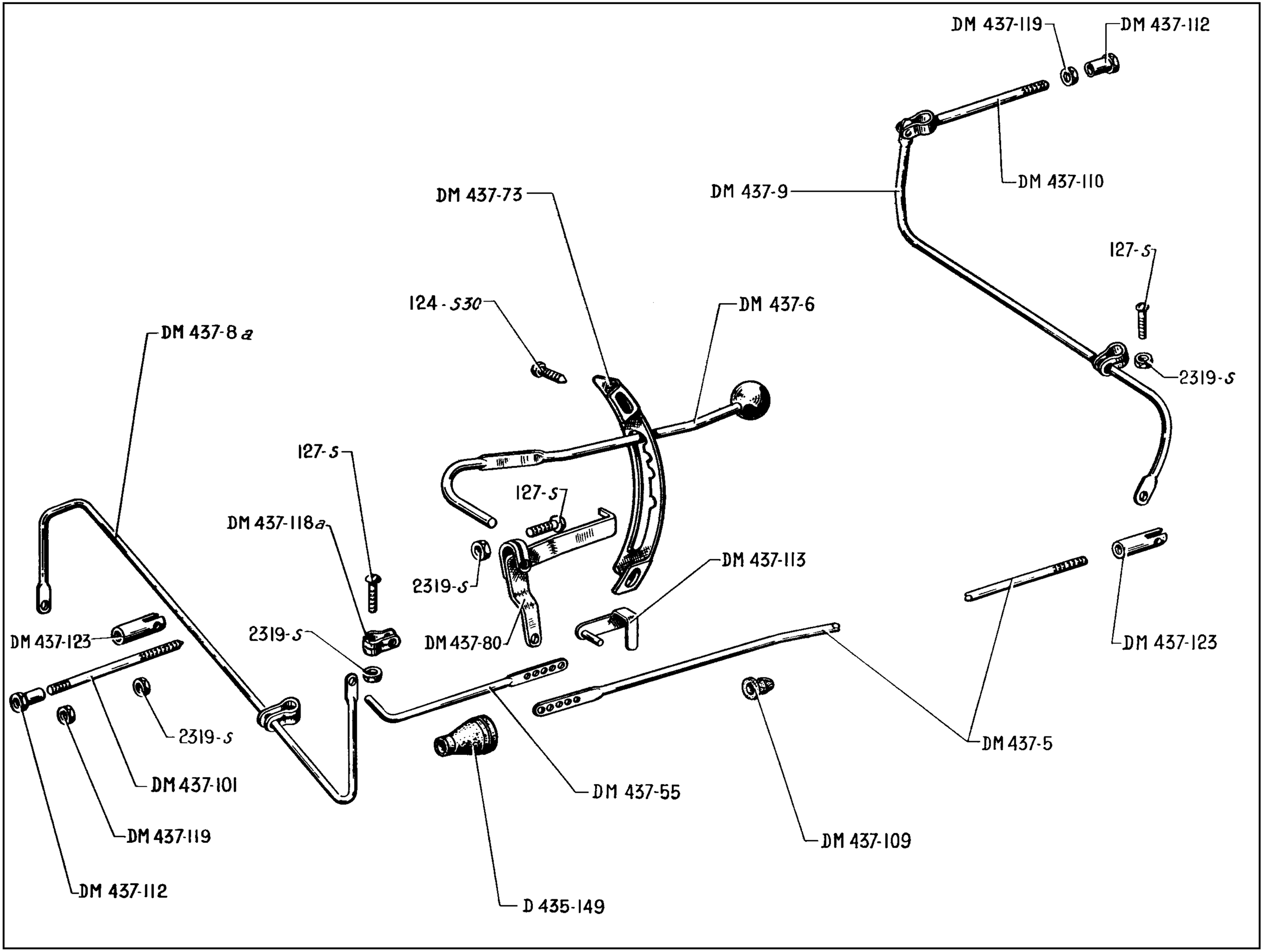
DM 437-119
DM 437-112
DM 437-110
DM 437-9
DM 437-73
127-S
124-S30
DM 437-6
2319-S
DM 437-8a
127-S
127-S
DM 437-118a
2319-S
DM 437-113
DM 437-123
2319-S
DM 437-80
DM 437-123
2319-S
DM 437-5
DM 437-101
DM 437-55
DM 437-119
DM 437-109
DM 437-112
D 435-149

NUMBER	DESCRIPTION	No. OFF
D 435-149	Sealing sleeve, rubber, on adjustable control rod, 6 x 36 x 60.	1
DM 437-5	Link rod, rear, for height control, 2170 mm long.	1
DM 437-6	Lever with knob for height control.	1
DM 437-8a	Torsion rod, front, complete, for height control.	1
DM 437-9	Torsion rod, rear, complete, for height control.	1
DM 437-55	Link rod, adjustable, between front torsion rod and height control.	1
DM 437-73	Quadrant for height control lever.	1
DM 437-80	Relay lever for height control.	1

NUMBER	DESCRIPTION	No. OFF
DM 437-101	Link rod, front, for height control, 81 mm long, threaded 5 diameter x 75 pitch.	1
DM 437-109	Bush, nylon, for height control rear link rod (for 8 mm diameter hole) (R. VI).	4
DM 437-110	Link rod with fork end for rear height control, 96 mm long.	1
DM 437-112	Nut, 5 diameter x 75 pitch, for locking height control, front and rear link rods, 11.5 mm long (R. VI).	2
DM 437-113	Link pin on height control lever.	1
DM 437-118a	Collar locking lateral movement of height control front torsion rod.	1

NUMBER	DESCRIPTION	No. OFF
DM 437-119	Locknut, 5 diameter x 75 pitch, for locking height control front and rear link rods (R. VI).	2
DM 437-123	Fork end for height control front and rear link rods, 35 mm long, threaded 5 diameter x 75 pitch.	2
124-S 30	Screw, round head, 5 diameter x 10 mm long, for securing quadrant on scuttle side panel (R. III).	2
127-S	Screw, round head, 5 diameter x 20 mm long (R. III) for securing:	
	- clip on lever with ball.	1
	- clip on front and rear torsion bars.	2
2.319-S	Nut, hex., 5 diameter x 75 pitch (R. III) for securing:	
	- front link rod on fork.	1
	- clip on front and rear torsion rods.	2
	- clip on lever with ball.	1

140 - MANUAL HEIGHT CONTROL - RIGHT-HAND STEERING

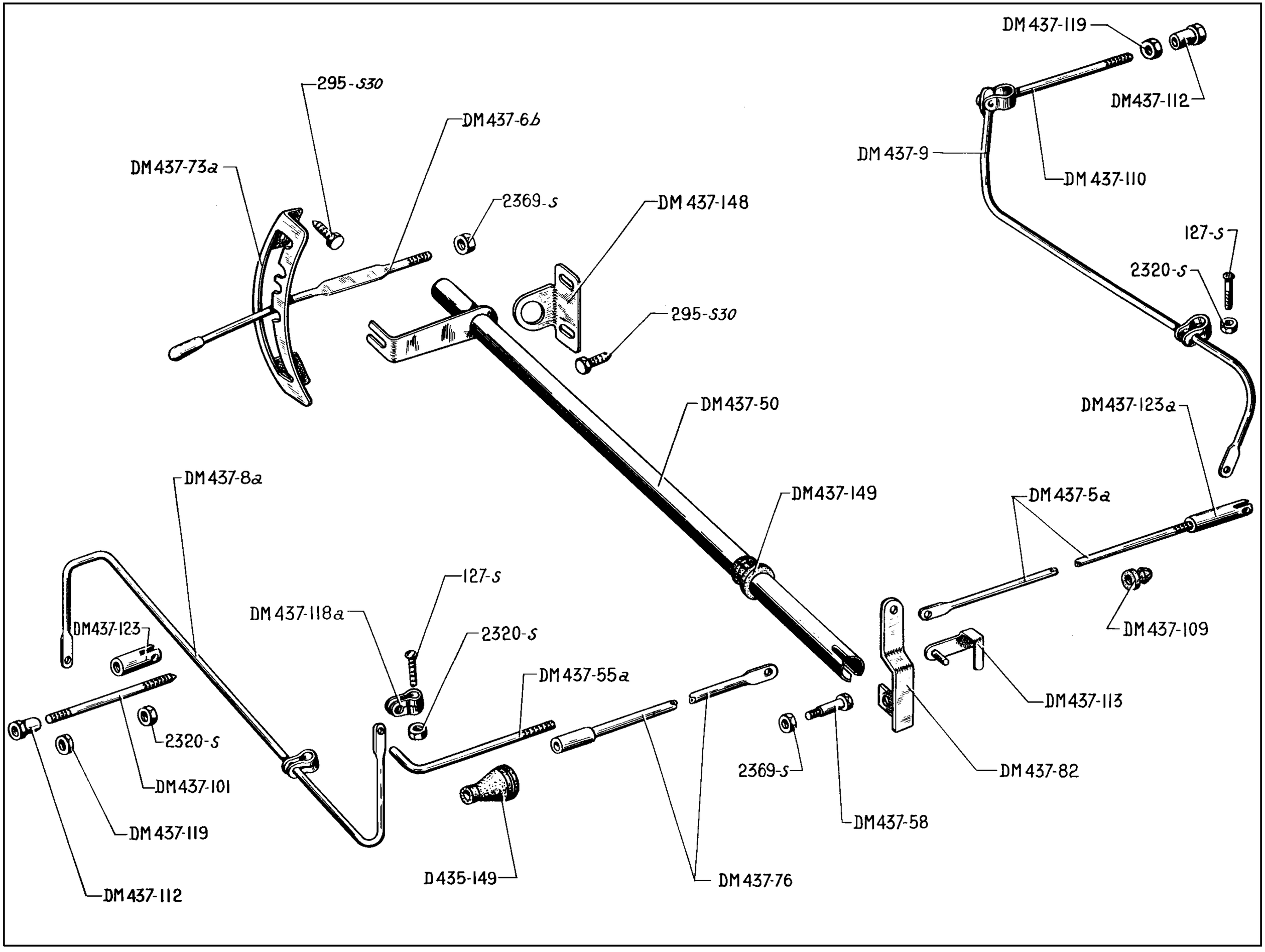

NUMBER	DESCRIPTION	No. OFF
	Since October 1962	
D 435-149	Sealing sleeve, rubber, on front link rod, 6 x 36 x 60.	1
DM 437-5a	Link rod, rear, for height control, 1.564 m. long.	1
DM 437-6b	Lever with knob for height control, 227 mm.	1
DM 437-8a	Torsion rod, front, complete, for height control.	1
DM 437-9	Torsion rod, rear, complete, for height control.	1
DM 437-50	Relay shaft, for height control, 1.352 m long x 19 mm diameter.	1
DM 437-55a	Link rod, adjustable, between front torsion rod and height control, threaded 5 x 75 (R. VI).	1
DM 437-58	Screw, hex. head, 6 x 100 long, length under head, 25 mm plain part, 8 mm diameter for clamping relay lever of height control (R. VI).	1
DM 437-73a	Quadrant for height control lever, 30 mm long (R. VI).	1

NUMBER	DESCRIPTION	No. OFF
DM 437-76	Link tube, front, 562 mm tapped 5 x 75 (R. VI).	1
DM 437-82	Relay lever for height control (R. VI).	1
DM 437-101	Link rod, front, for height control 81 mm long, threaded 5 diameter x 75 pitch	1
DM 437-109	Bush, nylon, for height control rear link rod, (for 8 mm diameter hole) (R. VI).	3
DM 437-110	Link rod with fork end for rear height control, 96 mm long.	1
DM 437-112	Nut, 5 diameter x 75 pitch, for locking front and rear link rods for height control, 11.5 mm long (R. VI).	2
DM 437-113	Link pin on height control lever.	1
DM 437-118a	Collar locking lateral movement of height control front torsion rod.	1
DM 437-119	Locknut, 5 diameter x 75 pitch, for locking height control front and rear link rods (R. VI).	2

NUMBER	DESCRIPTION	No. OFF
DM 437-123	For fork for height control front link rod, 35 mm long, threaded 5 diameter x 75 pitch.	1
DM 437-123a	Fork end for height control rear link rod, 63 mm long, threaded 5 diameter x 75 pitch (R. VI).	1
DM 437-148	Support bracket for relay shaft, of height control 23.2 mm diameter.	1
DM 437-149	Bearing for relay shaft, of height control, 19.5 diameter x 23 x 8.5 mm (R. VI). Until January 1964.	2
DM 437-149a	Bearing for control shaft, of height control, 19.5 diameter x 23 mm x 8.5 mm (R. VI). Since February 1964.	2
127-S	Screw, round head, 5 diameter x 20 mm long, for securing locking collar on link rod (R. III).	2
295-S 30	Screw, hex. head, pointed, 5 x 16 for securing (R. III):	
	- support bracket for relay shaft.	2
	- quadrant on sidemember.	2
2.320-S	Nut, hex., 5 x 75, for front link rod and fork end (R. III).	1
	- for locking collar on front and rear link rods.	2
2.369-S	Nut, hex., 6 x 100 for securing (R. III):	
	- relay lever for height control.	1
	- control lever for height control.	1

The numbers underlined indicate new parts which do not appear on the illustration.

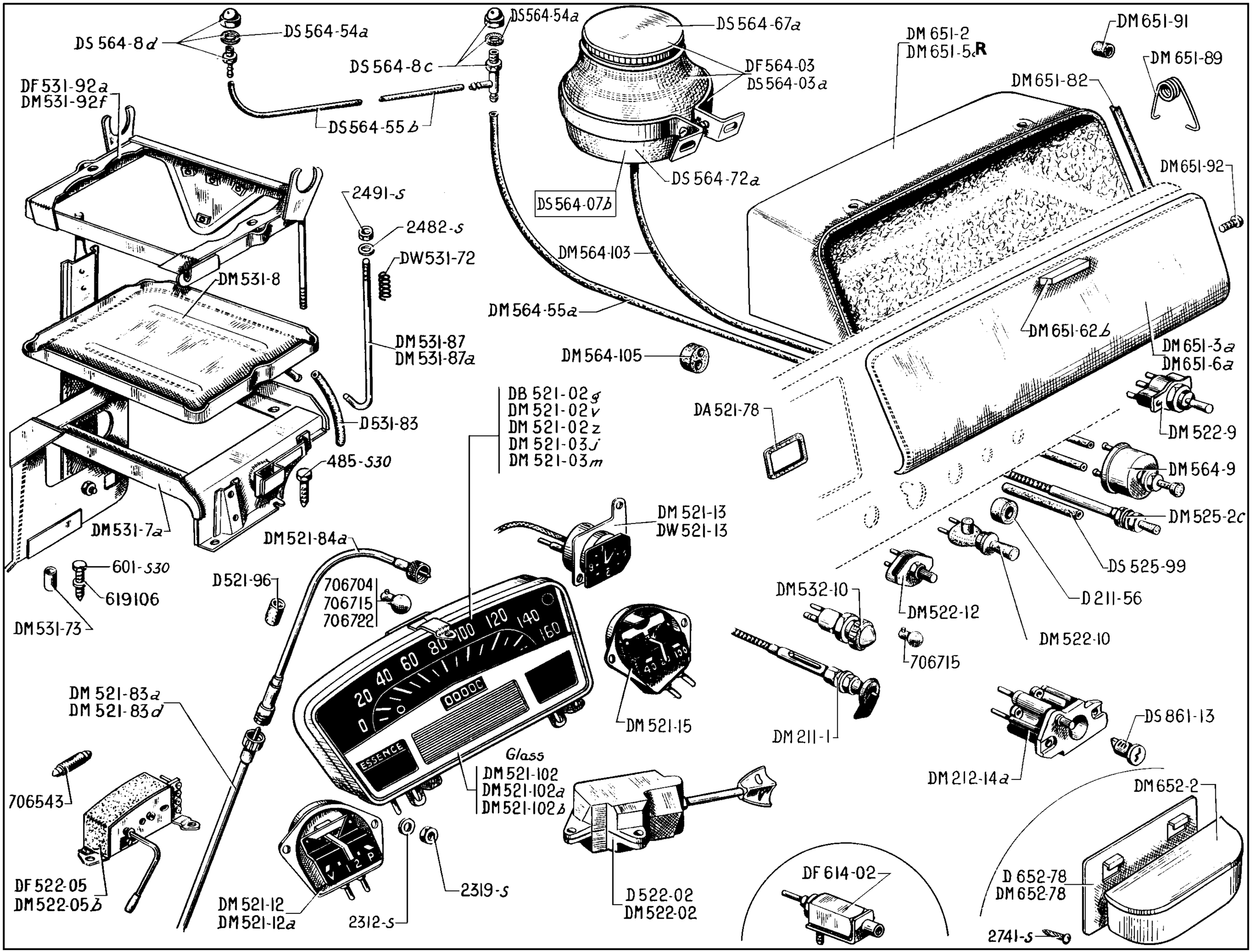
DS 564-8d
DS 564-54a
DS564-54a
DS 564-8c
DS 564-55b
DS 564-67a
DF564-03
DS564-03a
DS 564-72a
DS564-07b
DM 651-2
DM 651-5R
DM651-91
DM 651-89
DM651-82
DM651-92
DF 531-92a
DM531-92f
2491-s
2482-s
DW531-72
DM 531-8
DM564-103
DM564-55a
DM 531-87
DM 531-87a
DM564-105
DM651-62b
DM 651-3a
DM651-6a
DB 521-02g
DM 521-02v
DM 521-02z
DM 521-03j
DM 521-03m
DA 521-78
DM 522-9
D531-83
485-S30
DM564-9
DM 525-2c
DM 521-13
DW 521-13
DM531-7a
DM521-84a
601-S30
619106
DS 525-99
D521-96
706704
706715
706722
DM532-10
DM522-12
D 211-56
DM531-73
DM522-10
706715
DM 521-83a
DM 521-83d
DM 521-15
DM 211-1
DS 861-13
Glass
DM 521-102
DM 521-102a
DM 521-102b
DM 212-14a
DM652-2
706543
DF 522-05
DM522-05b
DM 521-12
DM 521-12a
2312-s
2319-s
D 522-02
DM 522-02
DF 614-02
D 652-78
DM652-78
2741-s
ESSENCE

NUMBER	DESCRIPTION	No. OFF
	Until September 1960	
	INSTRUMENT BOARD SWITCHES CHOKE CONTROL	
DM 211-1	Ignition control, 440 mm long (R. VI).	1
D 211-56	Bush, rubber, 4 x 16 x 20, for sealing choke control.	1
DM 212-14a	Ignition switch, with starter button, without lock barrel (R. VI).	1
DB 521-02g	Instrument panel ED (Véglia), 12 volts, with clock (R. VI). CONFORT. L.H. steering.	1
DM 521-02v	Instrument panel ED (Veglia), 12 volts, without clock (R. VI). LUXE AND COMMERCIAL. L.H. steering.	1
DM 521-02z	*Instrument panel ED (Veglia), 12 volts with water thermometer (R. VI). AMBULANCE. Replaced by DM 521-07k.*	1
DM 521-03j	Instrument panel ED (Véglia), 12 volts, without clock, graduated in miles (R. VI). BREAK, LUXE. R.H. steering.	1
DM 521-03m	Instrument panel ED (Véglia), 12 volts, with clock, graduated in miles (R. VI). BREAK, CONFORT. U.S.A. and R.H. steering.	1
DM 521-12	Petrol gauge ED (Véglia), 12 volts (R. VI). BREAK. U.S.A. and R.H. steering.	1
DM 521-12a	Petrol gauge ED (Véglia), 12 volts (R. VI).	1

NUMBER	DESCRIPTION	No. OFF
DM 521-13	*Clock, Jaeger, on panel ED (Veglia) (R. VI). CONFORT. Replaced by DM 521-13b.*	1
DW 521-13	Clock, Jaeger, electric, 12 volts, on central cover of the instrument panel (R. VI). AMBULANCE.	1
DM 521-15	Water thermometer on instrument board ED (Véglia), 12 volts (R. VI). AMBULANCE.	1
DA 521-78	Joint, rubber, 48 x 54 x 2.5, between clock and central cover on instrument panel (R. VI). AMBULANCE.	1
DM 521-83a	Cable, flexible, for ED speedometer, part at gearbox end, 1030 mm long (R. VI). L.H. steering.	1
DM 521-83d	Cable, flexible, for ED speedometer, part at gearbox end, 1730 mm long (R. VI). R.H. steering.	1
DM 521-84a	Cable, flexible, for ED speedometer, part at speedometer end, 270 mm long (R. VI).	1
D 521-96	Bush, rubber, 8 x 22 x 20 for protecting speedometer flexible cable.	2
DM 521-102	Glass for ED (Véglia) instrument panel (R. VI). L.H. steering.	1
DM 521-102a	Glass for ED (Véglia) instrument panel, graduated in miles (R. VI). R.H. steering.	1
DM 521-102b	Glass for ED (Véglia) instrument panel, graduated for water thermometer (R. VI). AMBULANCE.	1
D 522-02	*Switch for lighting and horn (R. VI). R.H. steering. Replaced by AM 522-02.*	1

NUMBER	DESCRIPTION	No. OFF
DM 522-02	*Switch for lighting and horn (R. VI). L.H. steering. Replaced by DM 522-02b.*	1
DF 522-05	Switch Scintex, 12 volts, for direction indicators, (R. VI). BREAK. R.H. steering.	1
DM 522-05b	Switch for direction indicator (R. VI). L.H. steering.	1
DM 522-9	Switch for parking light (R. VI).	1
DM 522-10	Switch for windscreen wiper and interior lighting (R. VI).	2
DM 522-12	Rheostat switch, 12 volts, for instrument panel lighting (R. VI).	1
DM 525-2c	Choke control, Rilsan sheath, 660 mm long (R. VI).	1
DS 525-99	Sheath, rubber, anti-rattle, for choke control, 200 mm long.	1
DM 532-10	Tell-tale light, red, for battery charge (R. VI).	1
DF 614-02	*Pressure switch for brakes (R. VI). Replaced by DF 614-02a.*	1
DS 861-13	Set of 4 locking barrels for ignition and doors (R. VI).	1
2.312-S	Washer, 5.5 x 9, for nuts securing instrument board (R. III).	4
2.319-S	Nut, hex., 5 x 75, for fixing screws of the instrument panel (R. III).	2
706.543	Bulb, 12 volts, 4 watts, 2 pin, for direction indicator switch (R. VI). R.H. steering.	1
706.704	Bulb, 12 volts, 3 watts, for brake tell-tale light on instrument panel (R. VI).	1

NUMBER	DESCRIPTION	No. OFF
706.715	Bulb, 24 volts, 3 watts (R. VI):	
	- for battery tell-tale light on dashboard.	1
	- for headlamp tell-tale light on instrument board.	1
706.722	Bulb, 12 volts, 2 watts, for illuminating instrument board (R. VI).	2
	BATTERY	
	(Apply direct to makers: DININ, TUDOR, TEM, FULMEN or their official agents).	
DM 531-7a	Bracket for battery. Since June 1960. Replaces previous model; order in addition: 1-DM 531-87a.	1
DM 531-8	Tray for battery (R. VI).	1
DW 531-72	Spring on battery tie-rod, 8.5 mm internal diameter x 23 mm long.	2
DM 531-73	*Distance piece, 9.5 x 16 x 25.5, for securing battery bracket. Replaced by DM 531-73a.*	1
D 531-83	Tube, 8 x 10, for draining water from battery tray, 500 mm long (R. VI).	1
DM 531-87	Tie-rod, rear, for securing battery frame, threaded 7 diameter x 100 pitch x 270 mm long. Until June 1960.	1
DM 531-87a	Tie-rod, rear, for securing battery frame, threaded 7 diameter x 100 pitch x 270 mm long. Since June 1960.	1
DF 531-92a	Frame for securing battery with adjustable support. EXCEPT U.S.A.	1
DM 531-92f	Frame for securing battery with adjustable support and securing rod for starter relay. U.S.A.	1

NUMBER	DESCRIPTION	No. OFF
485-S 30	Screw, hex. head, 7 diameter x 30 mm long, for securing battery bracket to sidemember (R. III).	2
601-S 30	Screw, hex. head, pointed, 9 diameter x 50 mm long, for securing battery bracket on front engine crossmember.	1
2.482-S	Washer, 7.5 x 14, for nuts securing spring on tie-rod (R. III).	2
2.491-S	Nut, hex., 7 diameter x 100 pitch, for securing battery tie-rod (R. III).	2
619.106	Washer, 9.5 x 24 x 2, for screw securing battery bracket on front engine crossmember (R. III).	1
	GLOVE BOX	
	FRONT AND REAR ASHTRAYS	
DM 651-2	Glove box, L.H. steering.	1
DM 651-3a	Cover, L.H. steering.	1
DM 651-5a	Glove box, R.H. steering.	1
DM 651-6a	Cover, R.H. steering.	1
DM 651-62b	Catch for glove box cover (R. VI).	1
DM 651-82	Beading for glove box.	1
DM 651-89	Spring for glove box cover.	2
DM 651-91	Buffer, rubber, for glove box cover.	1
DM 651-92	Screw, flat head, 5 diameter x 10 mm long (cruciform slot) for securing cover (R. VI).	2
DM 652-2	Ash tray (R. VI).	
	- front. LUXE.	1
	- front and rear. CONFORT.	2
D 652-78	Plate for securing rear ash tray (R. VI). CONFORT.	1

NUMBER	DESCRIPTION	No. OFF
DM 652-78	Plate for securing front ash tray (R. VI).	1
2.741-S	Screw, round head, Parker Kalon, 4.85 mm diameter x 9.5 mm long, for securing plate (R. VI).	2
	WINDSCREEN WASHER CONFORT AND AMBULANCE	
DF 564-03	Reservoir complete with securing clip, upright (R. VI). R.H. steering.	1
DS 564-03a	*Reservoir complete with securing clip, sloping (R. VI). L.H. steering. Replaced by DS 564-03c.*	1
DS 564-07b	Windscreen washer complete (R. VI). L.H. steering.	1
DS 564-8c	Jet with 2 connections, R.H. side (R. VI).	1
DS 564-8d	Jet with single connection, L.H. side (R. VI).	1
DM 564-9	Pump, 2 connections for 6 mm diameter tube (R. VI).	1
DS 564-54a	Washer for jet (R. VI).	2
DM 564-55a	Tube, 6 mm diameter for delivery from pump to R.H. jet, 1080 mm long (R. VI).	1
DS 564-55b	Tube, 4 mm diameter for delivery from R.H. jet to L.H. jet, 690 mm long (R. VI).	1
DS 564-67a	Cover with joint (R. VI).	1
DS 564-72a	*Reservoir without cover or clip (R. VI). Replaced by DS 564-03c.*	1
DM 564-103	Tube, 6 mm diameter for delivery from pump to reservoir, 1 m long (R. VI).	1
DM 564-105	Protector, rubber, for tubes 2 holes, 6 mm diameter (R. VI).	1

146 - INSTRUMENT BOARD - 12 VOLTS IN KM (R. VI) - SINCE SEPTEMBER 1960

Instrument Board Mark	Numbers of Instrument Boards	Petrol Gauge	Clock	Thermometer	Glass	Mileage Recorder	Types	Observations
				GRADUATED TO 160 KM - UNTIL SEPTEMBER 1962				
E. D. Véglia	*DM 521-02v Replaced by DM 521-07g*	DM 521-12a	without	without	DM 521-102	Total mileage recorder	LUXE AND COMMERCIAL	
E. D. Véglia	DB 521-02g	DM 521-12a	DM 521-13b	without	DM 521-102	Total mileage recorder	CONFORT	
E. D. Véglia	DB 521-02e	DM 521-12a	without	without	DM 521-102	Total and trip mileage recorder	EUROPE, LUXE AND CONFORT	
E. D. Véglia	DM 521-02z	DM 521-12a	without	DM 521-15	DM 521-102b	Total mileage recorder	AMBULANCE AND EUROPE. COLD CLIMATES.	
E. D. Véglia	*DM 521-02x Replaced by DM 521-07i*	DM 521-12a	without	DM 521-15	DM 521-102b	Total and trip mileage recorder	CONFORT. COLD CLIMATES	
				GRADUATED TO 180 KM - SEPTEMBER 1962 - SEPTEMBER 1964				
E. D. Véglia	DM 521-07g	DM 521-12a	without	without	DM 521-102e	Total mileage recorder	LUXE AND COMMERCIAL	
E. D. Véglia	DB 521-03e	DM 521-12a	DM 521-13b	without	DM 521-102e	Total mileage recorder	CONFORT	
E. D. Véglia	DM 521-07k	DM 521-12a	without	DM 521-15	DM 521-102k	Total mileage recorder	AMBULANCE AND EUROPE. COLD CLIMATES	
E. D. Véglia	DM 521-07i	DM 521-12a	without	DM 521-15	DM 521-102n	Total and trip mileage recorder	CONFORT. COLD CLIMATES	

NOTE - The instrument boards are fitted with tell-tale lights; for the sockets and bulbs, see page 150.

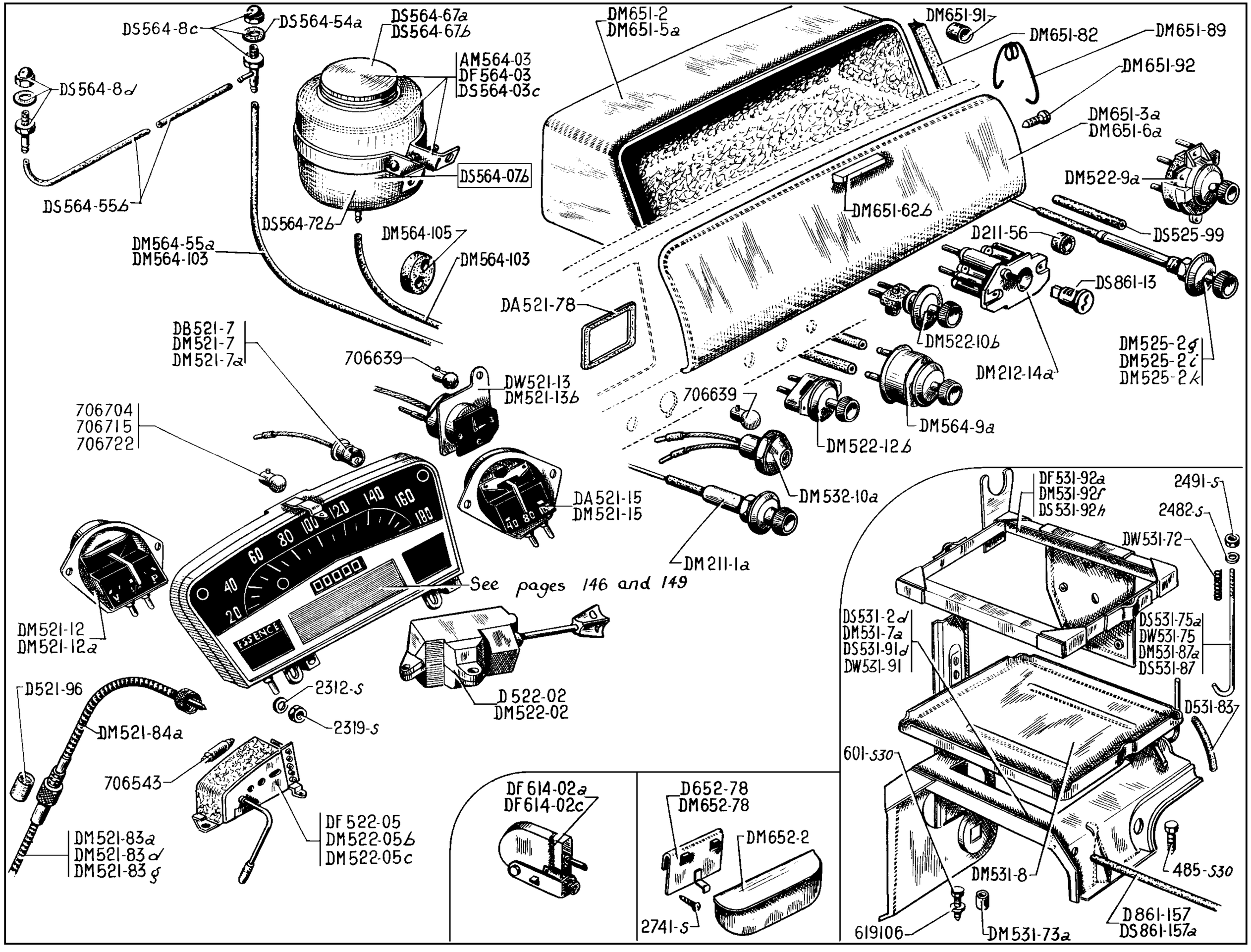
DS564-8c
DS564-54a
DS564-67a
DS564-67b
DM651-2
DM651-5a
DM651-91
DM651-82
DM651-89
DM651-92
AM564-03
DF564-03
DS564-03c
DS564-8d
DM651-3a
DM651-6a
DS564-07b
DM522-9a
DS564-55b
DM651-62b
DS564-72b
DM564-105
D211-56
DS525-99
DM564-55a
DM564-103
DM564-103
DS861-13
DA521-78
DB521-7
DM521-7
DM521-7a
706639
DM522-10b
DM525-2g
DM525-2i
DM525-2k
DW521-13
DM521-13b
DM212-14a
706704
706715
706722
706639
DM564-9a
DM522-12b
DM532-10a
DA521-15
DM521-15
DM211-1a
See pages 146 and 149
DM521-12
DM521-12a
D522-02
DM522-02
2312-s
2319-s
D521-96
DM521-84a
706543
DF522-05
DM522-05b
DM522-05c
DM521-83a
DM521-83d
DM521-83g
DF614-02a
DF614-02c
D652-78
DM652-78
DM652-2
2741-s
DF531-92a
DM531-92f
DS531-92h
2491-s
2482-s
DW531-72
DS531-2d
DM531-7a
DS531-91d
DW531-91
DS531-75a
DW531-75
DM531-87a
DS531-87
D531-83
601-s30
DM531-8
485-s30
619106
DM531-73a
D861-157
DS861-157a

Instrument Board Mark	Numbers of Instrument Boards Graduated to 120 Miles	Petrol Gauge	Clock	Thermometer	Glass Graduated to 100 Miles	Glass Graduated to 120 Miles	Mileage Recorder	Type	Observations
				Until September 1964					
E. D. Véglia	DM 521-03j	DM 521-12	without	without	DM 521-102a	DM 521-102g	Total mileage recorder	Luxe, U. S. A. and R. H. steering	
E. D. Véglia	DM 521-03m	DM 521-12	DM 521-13b	without	DM 521-102a	DM 521-102g	Total mileage recorder	Confort, U. S. A. and R. H. steering	
E. D. Véglia	DM 521-03q	DM 521-12	without	DA 521-15 (in Fahrenheit)	DA 521-102	DM 521-102h	Total mileage recorder	U. S. A. and R. H. steering. Cold Climates	*Replace Instrument Boards Graduated to 100 Miles*
E. D. Véglia	DF 521-03g	DM 521-12	without	without	DM 521-102a	DM 521-102i	Total and trip mileage recorder	R. H. steering	
E. D. Véglia	DM 521-03u	DM 521-12	without	DA 521-15 (in Fahrenheit)	DA 521-102	DM 521-102j	Total and trip mileage recorder	Confort, R. H. steering. Cold Climates	

NOTE - The instrument boards are fitted with tell-tale lights; for the sockets and bulbs, see page 150.

NUMBER	DESCRIPTION	No. OFF
	September 1960 - September 1964	
	SWITCHES CONTROLS	
AM 522-02	Switch for lighting and horn (R. VI). R.H. steering. Since May 1964.	1
HY 522-8a	Switch for headlamp flasher (R. VI). GERMANY. Since May 1964.	1
DM 211-1a	Ignition control, 440 mm long (R. VI). Until April 1962.	1
D 211-56	Bush, rubber, 4 x 16 x 20, for sealing choke control.	1
DM 212-14a	Ignition switch, with starter button, without lock barrel (R. VI).	1
DB 521-7	Socket for tell-tale light, red, for brake, on instrument board "ED" (Veglia) without bulb, violet flex (R. VI).	1
DM 521-7	Socket for tell-tale light, blue, for headlamps on instrument board "ED" (Veglia), without bulb, yellow flex (R. VI).	1
DM 521-7a	Socket for tell-tale light, green, for traffic indicators, on instrument board "ED" (Veglia) without bulb, green flex (R. VI). U.S.A.	1
DW 521-13	Clock, Jaeger electric, 12 volt, on central cover on dashboard (R. VI). AMBULANCE and CONFORT. COLD CLIMATES.	1
DA 521-78	Joint, rubber, 48 x 54 x 2, between clock and central cover on dashboard (R. VI). AMBULANCE and CONFORT. COLD CLIMATES.	1
DM 521-83a	Cable, flexible, for "ED" speedometer, part at gearbox end, 1030 mm long (R. VI). L.H. steering.	1
DM 521-83d	Cable, flexible, for "ED" speedometer (Veglia), part at gearbox end, 1730 mm long (R. VI). R.H. steering. Until September 1962.	1
DM 521-83g	Cable, flexible, for "ED" speedometer (Veglia), part at gearbox end, 1565 mm long (R. VI). R.H. steering. Since September 1962.	1
DM 521-84a	Cable, flexible, for "ED" speedometer, part at speedometer end, 270 mm long (R. VI).	1
D 521-96	Bush, rubber, 8 x 22 x 20, for protecting speedometer flexible cable.	2
D 522-02	Switch for lighting and horn (R. VI). R.H. steering. Until May 1964.	1
DM 522-02	Switch for lighting and horn (R. VI). L.H. steering. Until May 1964.	1
DM 522-02b	Switch for lighting and horn (R. VI). L.H. steering. Since May 1964.	1
DF 522-05	Switch Scintex, 12 volts, for direction indicator (R. VI). BREAK. R.H. steering.	1
DM 522-05b	Switch, 12 volt "AXO" for direction indicator (R. VI). L.H. steering.	1
DM 522-05c	Switch, 12 volt "AXO" for direction indicators (R. VI). U.S.A.	1
DM 522-9a	Switch for parking light (R. VI).	1
DM 522-10b	Switch (R. VI) for:	
	- windscreen washer.	1
	- interior lighting.	1
	- heating group, front, left.	1
	- heating group, front, right. COLD CLIMATES.	1
DM 522-12b	Rheostat switch, 12 volt, for instrument panel lighting (R. VI).	1
DM 525-2g	Choke control with Rilsan sheath, 660 mm long (R. VI). Until April 1962.	1
DM 525-2i	Choke control with Rilsan sheath, 515 mm long (R. VI). April 1962 - March 1963.	1
DM 525-2k	Choke control, 515 mm long (R. VI). Since March 1963.	1
DS 525-99	Sheath, rubber, anti-rattle, for choke control, 200 mm long.	1
DM 532-10a	*Tell-tale light, red, for battery charge (without bulb) (R. VI). Replaced by DM 532-10b.*	1
DM 532-10b	Tell-tale light, red, for battery charge, without bulb (R. VI).	1
DS 571-7	Relay, Sanor, for headlamp flasher, on instrument panel (R. VI). GERMANY. Since May 1964.	1
DS 861-13	*Set of 4 locking barrels, for ignition switch and doors (R. VI). Replaced by DS 861-13b.*	1
DS 861-43	Locking barrel for ignition switch (R. VI).	1
2.312-S	Washer, 5.5 x 12, for nuts securing instrument panel (R. III).	4
2.319-S	Nut, hex., 5 x 75, for the screws securing instrument panel (R. III).	2
706.543	Bulb, 12 volt, 4 watts, 2 pin, for direction indicator switch (R. VI). R.H. steering.	1
706.639	Bulb, 12 volt, 1.5 watts (R. VI) for:	
	- light on clock on dashboard. AMBULANCE and CONFORT. COLD CLIMATES.	1
	- tell-tale light for battery. Since May 1962.	1
706.704	Bulb, 12 volt, 3 watts, for tell-tale light for brake (R. VI).	1
706.715	Bulb, 24 volt, 3 watts (R. VI) for:	
	- tell-tale light for battery. Until May 1962.	1
	- tell-tale light for headlamp.	1
	- direction indicator. U.S.A.	1
706.722	Bulb, 12 volt, 2 watts, for illuminating instrument board (R. VI).	2
	BATTERY	
	(Apply direct to makers, DININ, TUDOR, TEM, FULMEN or their official agents).	
	September 1960 - September 1964	
DS 531-2d	Bracket for battery. August 1961 - September 1962.	1

The numbers underlined indicate new parts which do not appear on the illustration.

NUMBER	DESCRIPTION	No. OFF
DM 531-7a	Bracket for battery. Until August 1961.	1
DM 531-8	*Tray for battery. Replaced by DS 531-60.*	1
DW 531-72	Spring on battery tie-rod, 8.5 mm internal diameter x 20 mm long.	2
DM 531-73a	Distance piece, 9.5 x 16 x 21.5 for securing battery bracket.	1
DS 531-75a	Tie-rod, front and rear, for securing battery frame, 164 mm long. Since September 1962.	2
DW 531-75	Tie-rod, front, for securing battery frame, 143 mm long. October 1961 - September 1962.	1
D 531-83	Tube, 8 x 10, for draining water from battery tray, 500 mm long (R. VI).	1
DM 531-87a	Tie-rod, for securing battery frame threaded 7 diameter x 100 pitch, 270 mm long. Until October 1961.	1
DS 531-87	Tie-rod, rear, for securing battery frame, threaded 7 diameter x 100 pitch, 245 mm long. October 1961 - September 1962.	1
DS 531-91d	Bracket for battery with support for group heater. Cold Climates. Since September 1962.	1
DW 531-91	Bracket for battery except Cold Climates. Since September 1962.	1
DF 531-92a	*Frame for securing battery, with adjustable support. EXCEPT U.S.A. Until October 1961. Replaced by DM 531-92f.*	1
DM 531-92f	Frame for securing battery with adjustable support and securing rod for starter relay. (R. VI). U.S.A. Until October 1961.	1
DS 531-92h	Frame for securing battery. Since October 1961.	1
D 861-157	Sheath, 4.5 x 6 x 630 on battery bracket to protect the cable from bonnet opening left side (R. VI).	1
DS 861-157a	Sheath, 4.5 x 6 x 350 to protect cable from bonnet opening right side (R. VI). Since September 1962.	1
485-S 30	Screw, hex. head, 7 diameter x 30 mm long for securing battery bracket to sidemember (R. VI).	2

NUMBER	DESCRIPTION	No. OFF
601-S 30	Screw, hex. head, pointed, 9 diameter x 50 mm long, for securing battery bracket on front engine crossmember (R. III).	1
2.482-S	Washer, 7.5 x 14, for nuts securing spring on tie-rod (R. III).	2
2.491-S	Nut, hex., 7 diameter x 100 pitch, for securing battery tie-rod (R. III).	2
619.106	Washer, 9.5 x 24 x 2, for screw securing battery bracket on front engine crossmember (R. III).	1
	PRESSURE SWITCH FOR BRAKES	
	September 1960 —September 1964	
DF 614-02a	Pressure switch for brake, rounded form (R. VI). Until September 1962. Replaces rectangular model.	1
DF 614-02c	*Pressure switch for brake with right lug and dowel pin, (R. VI). Since September 1962. Replaced by DF 614-02d.*	1
	GLOVE BOX	
	FRONT AND REAR ASHTRAYS	
	September 1960 – September 1964	
DM 651-2	Glove box. L.H. steering.	1
DM 651-3a	Cover. L.H. steering.	1
DM 651-5a	Glove box. R.H. steering.	1
DM 651-6a	Cover. R.H. steering.	1
DM 651-62b	Catch for glove box cover (R. VI).	1
DM 651-82	Beading for glove box.	1
DM 651-89	Spring for cover.	2
DM 651-91	Buffer, rubber, for cover.	1
DM 651-92	Screw, flat head, 5 diameter x 10 mm long (cruciform slot) for securing cover (R. VI).	2
DM 652-2	Ash tray (R. VI):	
	- FRONT. LUXE.	1
	- FRONT and REAR. CONFORT.	2
D 652-78	Plate for securing rear ash tray (R. VI). CONFORT.	1
DM 652-78	Plate for securing front ash tray (R. VI).	1

NUMBER	DESCRIPTION	No. OFF
2.741-S	Screw, round head, Parker Kalon, 4.85 mm diameter x 9.5 mm long for securing plate (R. VI).	2
	WINDSCREEN WASHER	
	CONFORT	
	September 1960 – September 1964	
AM 564-03	Reservoir, with securing clip, upright, L.H. side (R. VI). R.H. steering. Since January 1963.	1
DF 564-03	*Reservoir, with securing clip, upright, R.H. side. R.H. steering. Until July 1961. Replaced by DS 564-03c.*	1
DS 564-03c	Reservoir, complete, plastic (R. VI). L.H. steering. R.H. steering. July 1961 - January 1963. Replaces glass reservoir.	1
DS 564-07b	Windscreen washer, complete (R. VI). L.H. steering.	1
DS 564-8c	Jet with 2 connections, R.H. side (R. VI).	1
DS 564-8d	Jet with single connection, L.H. side (R. VI).	1
DM 564-9a	Pump (R. VI).	1
DS 564-54a	Washer for jet (R. VI).	2
DM 564-55a	Tube, 6 mm diameter for delivery from pump to R.H. jet, 1300 mm long (R. VI). R.H. steering.	1
DS 564-55b	Tube, 4 mm diameter for delivery from R.H. jet to L.H. jet, 1 m long.	1
DS 564-67a	Cover with joint for glass reservoir (R. VI). Until July 1961.	1
DS 564-67b	Cover for plastic reservoir (R. VI). Since July 1961.	1
DS 564-72b	Reservoir, plastic, without clip or cover (R. VI). Since July 1961.	1
DM 564-103	Tube, 6 mm diameter for delivery from the pump to the reservoir and suction to the R.H. jet 1 m long (R. VI).	2
DM 564-105	Protector, rubber, for tubes, two holes 6 mm diameter (R. VI).	1

Instrument Board Mark	Numbers of Instrument Boards	Speedometer	Petrol Gauge	Thermometer	Lamp Holder	Graduation	Types	Remarks
				SINCE SEPTEMBER 1964				
Jaeger	DW 521-02a	DW 521-4	DW 521-1	without	DW 521-85	180 km		Until November 1964.
Jaeger	DW 521-02e	DW 521-4	DW 521-1	DW 521-15	DW 521-85	180 km	Cold Climates. All Types.	Since November 1964.
Jaeger	DW 521-02i	DW 521-4a	DW 521-1	without	DW 521-85	120 miles	U. S. A. and R. H. steering.	Until November 1964.
Jaeger	DW 521-02k	DW 521-4a	DW 521-1	DW 521-15	DW 521-85	120 miles	U. S. A. and R. H. steering. Cold Climates. All Types.	Since November 1964.

NUMBER	DESCRIPTION	No. OFF
	Since September 1964	
D 211-56	Sealing bush, 4 x 16 x 20, for hole for starter control.	1
DW 212-14c	Ignition switch without barrel (R. VI).	1
DW 521-13	Electric clock, Jaeger, 12 volts on instrument board (R. VI).	1
DM 521-83g	Flexible cable for Jaeger speedometer, gearbox side, 1565 mm long (R. VI). R. H. steering.	1
DS 521-83a	*Flexible cable for Jaeger speedometer, gearbox side, 1320 mm long (R. VI). R.H. steering. Replaced by DM 521-83g.*	1
DW 521-83a	Flexible cable for Jaeger speedometer, gearbox side, 945 mm long (R. VI). L. H. steering.	1
DW 521-84a	Flexible cable for Jaeger speedometer, speedometer side, 400 mm long (R. VI).	1
DW 521-93	Button for return to zero of counter on instrument board (R. VI).	1
D 521-96	Rubber sleeve, 8 x 22 x 20, protecting flexible cable on speedometer.	2

NUMBER	DESCRIPTION	No. OFF
DW 522-02	Switch for lighting and horn (R. VI). L. H. steering.	1
DW 522-02a	Switch for lighting and horn (R. VI). R. H. steering.	1
DW 522-05	Switch, Axo, for direction indicators (R. VI). Except U. S. A. and GERMANY.	1
DW 522-05b	Switch, Axo, for direction indicators (R. VI). U. S. A.	1
DW 522-05d	Switch, Axo, for direction indicators with headlamp flasher (R. VI). GERMANY.	1
DM 522-9b	Switch for parking light (R. VI).	1
DS 522-10	Switch for windscreen wiper (R. VI).	1
DW 522-10	Switch (R. VI):	
	- interior lighting.	1
	- heating front and rear.	2
DM 522-12	Switch for lighting on instrument board (R. VI).	1

NUMBER	DESCRIPTION	No. OFF
DS 522-12	Switch for lighting on instrument board (R. VI). ITALY.	1
DM 524-29a	Relay contact for starter (R. VI).	1
DM 525-2m	Starter control wire cable, 560 mm long (R. VI).	1
DW 532-10a	Tell-tale light, red, for battery charging, without bulb (R. VI).	1
DM 532-100	Collar under tell-tale lamp (R. VI).	1
DS 571-7	Relay, Sanor, for headlamp flasher on dashboard (R. VI). GERMANY.	1
DS 861-43	Starter switch barrel (R. VI).	1
615.711	Nut clips for 5 mm screw securing instrument board (R. VI).	5
621.511	Screw, raised countersunk head, 5 x 30, for securing instrument board (R. VI).	5
706.639	Bulb, 12 volts, 1.5 watt (R. VI):	
	- on instrument board lighting.	2
	- clock light.	1
	- charging tell-tale light.	1

The numbers underlined indicate new parts which do not appear on the illustration.

NUMBER	DESCRIPTION	No. OFF
706.715	Bulb, 24 volts, 3 watts (R. VI) for tell-tale lights on instrument board for headlamps and direction indicators.	2
706.726	Bulb, 12 volts, 4 watts, for brake tell-tale light on instrument board (R. VI).	1
	BATTERY	
	(Apply direct to makers: DININ, TUDOR, TEM, FULMEN or their official agents).	
	FIXING **Since September 1964**	
DM 531-8	Tray for battery.	1
DW 531-72	Spring on battery tie-rod, 8.5 mm internal diameter x 20 mm long.	2
DM 531-73a	Distance piece, 8.5 x 16 x 21.5 for securing battery bracket.	1
DS 531-75a	Tie-bolt, front, for securing battery surround, 164 mm long.	1
D 531-83	Tube, 8 x 10, for draining water from battery tray, 500 mm long.	1
DS 531-87	Tie-bolt, rear, for securing battery surround, 7 x 100, 245 mm long.	1
DS 531-91d	Battery bracket with support clip for heater group. Cold Climates.	1
DW 531-91	Battery bracket. Except Cold Climates.	1
DM 531-92h	Support frame for battery.	1

NUMBER	DESCRIPTION	No. OFF
D 861-157	Sheath, 4.5 x 6 x 630 on battery bracket to protect the cable from bonnet opening, left side (R. VI).	1
DS 861-157a	Sheath, 4.5 x 6 x 350 to protect the cable from bonnet opening, right side (R. VI).	1
485-S 30	Screw, hex. head, 7 x 30, for securing battery bracket to side-member (R. III).	3
601-S 30	Screw, hex. head, pointed, 9 x 50, for front fixing of battery bracket (R. III).	1
2.482-S	Washer, 7.5 x 14, for nuts securing spring on tie-rod (R. III).	2
2.491-S	Nut, hex., 7 x 100, for battery tie-rod (R. III).	2
	PRESSURE SWITCH FOR BRAKES **Since September 1964**	
DF 614-02c	Pressure switch for brake (R. VI).	1
	GLOVE BOX ASH TRAYS MAP POCKETS **Since September 1964**	
DM 651-2b	Glove box. L.H. steering.	1
DM 651-2c	Glove box. R.H. steering.	1
DM 651-3c	Cover for glove box. L.H. steering.	1
DM 651-3d	Cover for glove box. R.H. steering.	1
DW 651-4a	Map pocket. L.H. steering.	1

NUMBER	DESCRIPTION	No. OFF
DS 651-9	Map pocket. R.H. steering.	1
DW 651-57a	Trimming for map pockets (R. VI).	1
DW 651-59	Catch for glove box cover.	1
DM 652-1a	Ash tray, front (R. VI).	1
DS 652-2a	Ash tray, rear. CONFORT.	1
DW 652-89	Guide for front ash tray (R. VI).	1
	WINDSCREEN WASHER **Since September 1964**	
AM 564-03	Reservoir, with securing clip, upright (R. VI). R.H. steering.	1
DS 564-03c	Reservoir complete (R. VI). L.H. steering.	1
DS 564-8c	Jet with double connection, right side (R. VI).	1
DS 564-8d	Jet with single connection, left side (R. VI).	1
DS 564-9a	Pump for windscreen washer (R. VI).	1
DS 564-54a	Washer for jet (R. VI).	2
DM 564-55a	Tube, 6 mm for delivery from pump to right-hand jet, 1300 mm long (R. VI).	1
DS 564-55b	Tube, 4 mm diameter, for delivery from right-hand jet to left-hand jet, 690 mm long (R. VI).	1
DS 564-67b	Cover for reservoir (R. VI).	1
DS 564-72b	Reservoir without cover or clip (R. VI).	1
DM 564-103	Tube, 6 mm for delivery from pump to reservoir, 1 m long (R. VI).	1
DM 564-105	Protector, rubber, for tubes, 2 holes 6 mm diameter (R. VI).	2

NUMBER	DESCRIPTION	No. OFF
706.715	Bulb, 24 volts, 3 watt, (R. VI) for tell-tale light for headlamps and direction indicators on dashboard.	2
706.726	Bulb, 12 volts, 4 watt, for brake tell-tale light on dashboard (R.VI). Until March 1965.	1
706.747	Bulb, 12 volts, 2 watt, (R. VI).	
	- dashboard lighting.	2
	- brake tell-tale light. Since March 1965.	1
	BATTERY	
	(Apply direct to the makers: DININ, TUDOR, TEM, FULMEN, or to their official agents).	
	FIXING Since September 1964	
DM 531-8	*Battery tray. Until October 1964. Replaced by DS 531-60.*	1
DS 531-60	Battery tray (R. VI). Since October 1964.	1
DW 531-72	Spring for battery tie-rod, interior diameter 8.5 mm x 20 mm long.	2
DM 531-73a	Distance piece, 8.5 x 16 x 21.5 for securing battery bracket.	1
DS 531-75a	Tie-rod, front and rear, for securing battery surround, length 164 mm.	2
D 531-83	Tube, 8 x 10, for draining water from battery tray, 500 mm long. Until October 1964.	1
DS 531-91d	Brackets for battery with supporting clip for heater unit. COLD CLIMATES.	1
DW 531-91	Battery bracket. EXCEPT COLD CLIMATES.	1
DM 531-92h	Surround for supporting battery.	1
D 861-157	Sheath, 4.5 x 6 x 630 on battery bracket for protecting cable at bonnet opening, left-hand (R. VI).	1

NUMBER	DESCRIPTION	No. OFF
DS 861-157a	Sheath, 4.5 x 6 x 350 for protecting cable at bonnet opening, right-hand (R. VI).	1
485-S 30	Screw, hex. head, 7 x 30, for securing battery bracket on side-member (R. III).	3
601-S 30	Screw, hex. head, 9 x 50 pointed, for securing front of battery bracket (R. III).	1
2.482-S	Washer, 7.5 x 14 for the nuts locking the spring on the tie-rod (R. III).	2
2.491-S	Nut, hex., 7 x 100, for securing tie-rods of battery (R. III).	2
	PRESSURE SWITCH FOR BRAKES Since September 1964	
DF 614-02c	*Pressure switch for brake (R. VI). Replaced by DF 614-02d.*	1
DF 614-02d	Pressure switch for brake (R. VI).	1
	GLOVE BOX ASH TRAYS MAP POCKETS Since September 1964	
DM 651-2b	Glove box. L.H. steering.	1
DM 651-2c	Glove box. R.H. steering.	1
DM 651-3c	Cover for glove box. L.H. steering.	1
DM 651-3d	Cover for glove box. R.H. steering.	1
DW 651-4a	Map pocket. L.H. steering.	1
DS 651-9	Map pocket. R.H. steering.	1
DW 651-57a	Lining for map pockets (R. VI).	1
DW 651-59	Clip for glove box opening.	1

NUMBER	DESCRIPTION	No. OFF
DM 651-98	Clip for closing glove box cover (R. VI).	1
DM 652-1a	Ash tray, front. (R. VI).	1
DS 652-2a	Ash tray, rear. CONFORT.	1
DW 652-89	Guide for ash tray (R. VI).	1
	WINDSCREEN WASHER Since September 1964	
AM 564-03	Reservoir for windscreen washer with securing clip, right-hand (R. VI). R.H. steering.	1
DS 564-03c	Reservoir complete (R. VI). L.H. steering.	1
DS 564-8c	Nozzle with double union, right-hand (R. VI).	1
DS 564-8d	Nozzle with single union, left-hand (R. VI).	1
DS 564-9a	Pump for windscreen washer (R. VI).	1
DS 564-54a	Joint for nozzle (R. VI).	2
DM 564-55a	Tube, 6 mm for delivery from pump to jet, right-hand, length 1300 mm (R. VI).	1
DS 564-55b	Tube, 4 mm diameter for delivery from right-hand to left-hand jet, 1 m long (R. VI).	1
DS 564-67b	Cover for reservoir (R. VI).	1
DS 564-72b	Reservoir without cover, or collar (R. VI).	1
DM 564-103	Tube, 6 mm diameter for delivery from pump to reservoir, 1 m long (R. VI).	1
DM 564-105	Protector, rubber, for tubes, 2 holes 6 mm.	2
1.059-S	Grommet, rubber, 5 x 18 x 4, for passage of delivery tube on bonnet (R. III).	2

The numbers underlined indicate new parts which do not appear on the illustration.

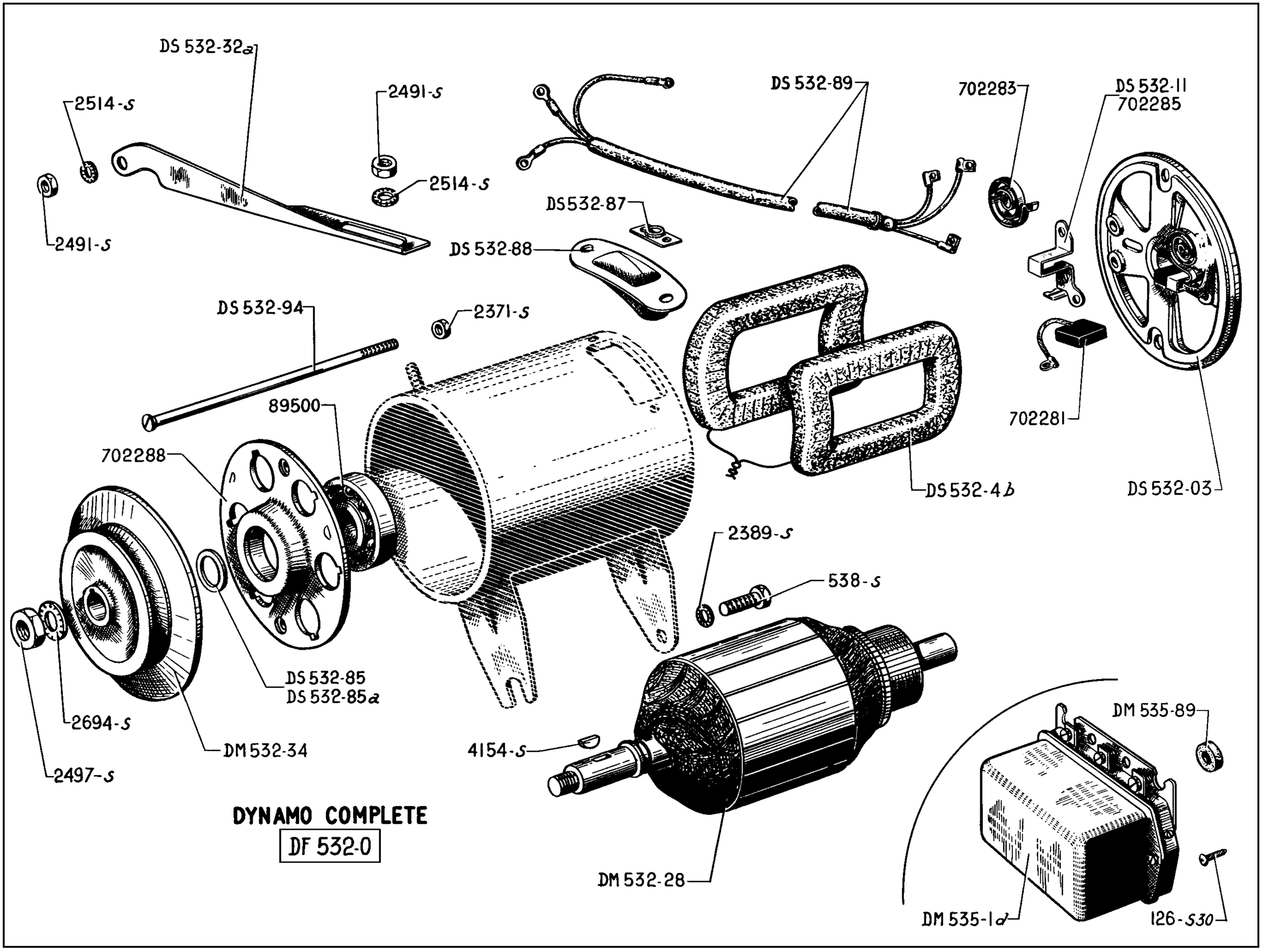

DYNAMO COMPLETE

DF 532-0

154 - DUCELLIER DYNAMO 12 VOLTS

NUMBER	DESCRIPTION	No. OFF
	Until October 1961	
DF 532-0	Dynamo complete (R. VI).	1
DS 532-03	End plate, commutator end, with brush holder, without brush or spring (R. VI).	1
DS 532-4b	Field coils (set of 2) (R. VI).	1
DS 532-11	Brush holder, positive (R. VI).	1
DM 532-28	Armature (R. VI).	1
DS 532-32a	Adjusting stay for belt.	1
DM 532-34	Pulley (R. VI).	1
DS 532-85	Washer, 26 x 17.2 x 1 for adjusting pulley.	As nec.
DS 532-85a	Washer, 26 x 17.2 x 0.5, for adjusting pulley.	As nec.
DS 532-87	Plate for cables (R. VI).	1
DS 532-88	Support for cables (R. VI).	1
DS 532-89	Cables from dynamo (R. VI).	1
DS 532-94	Screw for assembling end plates (R. VI).	2
DM 535-1d	Regulator, Ducellier, 12 volts (8243) (R. VI).	1
DM 535-89	Bush, rubber, for regulator.	1
126-S 30	Screw, round head, pointed, 5 dia-diameter x 18 mm long, for securing regulator (R. III).	3
538-S	Screw, hex. head, 9 diameter x 25 mm long for securing dynamo on clutch bellhousing (R. III).	2
2.371-S	Nut, hex., 6 diameter x 100 pitch, for screws securing end plates (R. III).	2
2.389-S	Washer, shakeproof, 9.5 x 16.5, for screws securing dynamo (R. VI).	2
2.491-S	Nut, hex., 7 diameter x 100 pitch, for securing belt adjusting stay to water pump and dynamo (R. III).	2
2.497-S	Nut, hex., 12 diameter x 175 pitch, for securing the pulley (R. III).	1
2.514-S	Washer, shakeproof, 7.3 x 12, for nut securing belt adjuster (R. VI).	2
2.694-S	Washer, shakeproof, 12.5 x 22, for pulley nut (R. VI).	1
4.154-S	Woodruff key, 4.6 x 5 x 16, for pulley (R. III).	1
89.500	Ball bearing, 17 x 40 x 12 (R. VI).	1
702.281	Brush (R. VI).	2
702.283	Spring for brush (R. VI).	2
702.285	Brush holder, negative (R. VI).	1
702.288	End plate, drive end, with ball bearing (R. VI).	1

156 - DUCELLIER DYNAMO 12 VOLTS

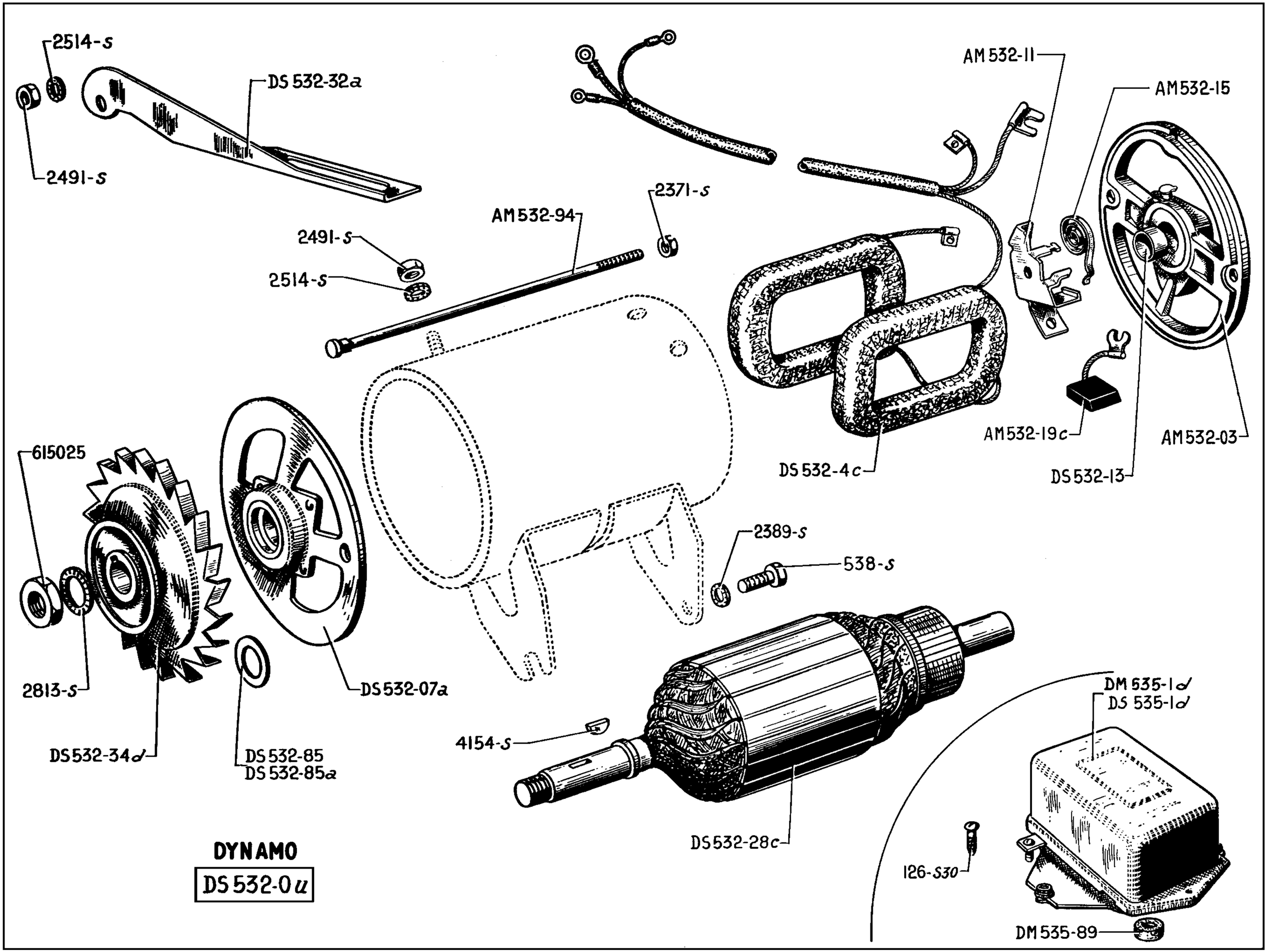

NUMBER	DESCRIPTION	No. OFF
	Since October 1961	
AM 532-03	End plate, commutator end (R. VI). Until June 1964.	1
AM 532-11	Brush holder (R. VI).	2
AM 532-15	Spring for brush (R. VI).	2
AM 532-19c	Brush, positive and negative (R. VI).	2
AM 532-94	Stud, 6 x 173, for assembling end plates (R. VI).	2
DS 532-0u	Dynamo complete, 103 mm diameter (R. VI). (7256 G). Until June 1964.	1
DS 532-0w	Dynamo complete, with terminals (7314 G) (R. VI). Since June 1964.	1
DS 532-03d	End plate, commutator end, with terminals (R. VI). Since June 1964.	1
DS 532-07a	End plate, drive end (R. VI).	1
DS 532-4c	Field coils (set)(R. VI). Until June 1964.	1
DS 532-4f	Field coils (set). Since June 1964.	1
DS 532-13	Bearing bush, 21 x 17 x 18 (R. VI).	2

NUMBER	DESCRIPTION	No. OFF
DS 532-28c	Armature (R. VI).	1
DS 532-32a	Adjusting stay for belt.	1
DS 532-34d	Pulley (R. VI).	1
DS 532-85	Washer, 26 x 17.2 x 1 for adjusting pulley.	As nec.
DS 532-85a	Washer, 26 x 17.2 x 0.5, for adjusting pulley.	As nec.
DM 535-1d	Regulator "Ducellier" 12 volts (8243) (R. VI).	1
DS 535-1d	Regulator "Paris-Rhone" 12 volts (YT 2113) (R. VI). Since September 1962.	1
DM 535-89	Bush, rubber, for regulator.	1
126-S 30	Screw, round head, pointed, 5 diameter x 18 mm long, for securing regulator (R. III).	2

NUMBER	DESCRIPTION	No. OFF
538-S	Screw, hex. head, 9 diameter x 25 mm long, for securing dynamo on clutch bellhousing (R. III).	2
2.371-S	*Nut, hex., 6 diameter x 100 pitch, for screw securing end plates (R. III). Replaced by 2.369-S.*	2
2.389-S	Washer, shakeproof, 9.5 x 16.5, for screws securing dynamo (R. VI).	2
2.491-S	Nut, hex., 7 diameter x 100 pitch, for securing belt adjusting stay to water pump and dynamo (R. III).	2
2.514-S	Washer, shakeproof, 7.3 x 12, for nut securing belt adjuster (R. VI).	2
2.813-S	Washer, shakeproof, 16.5 x 26 for nut securing pulley (R. VI).	1
4.154-S	Woodruff key, 4.5 x 5 x 16 for pulley (R. III).	1
615.025	Nut, hex., 16 x 125 for securing the pulley (R. III).	1

The numbers underlined indicate new parts which do not appear on the illustration.

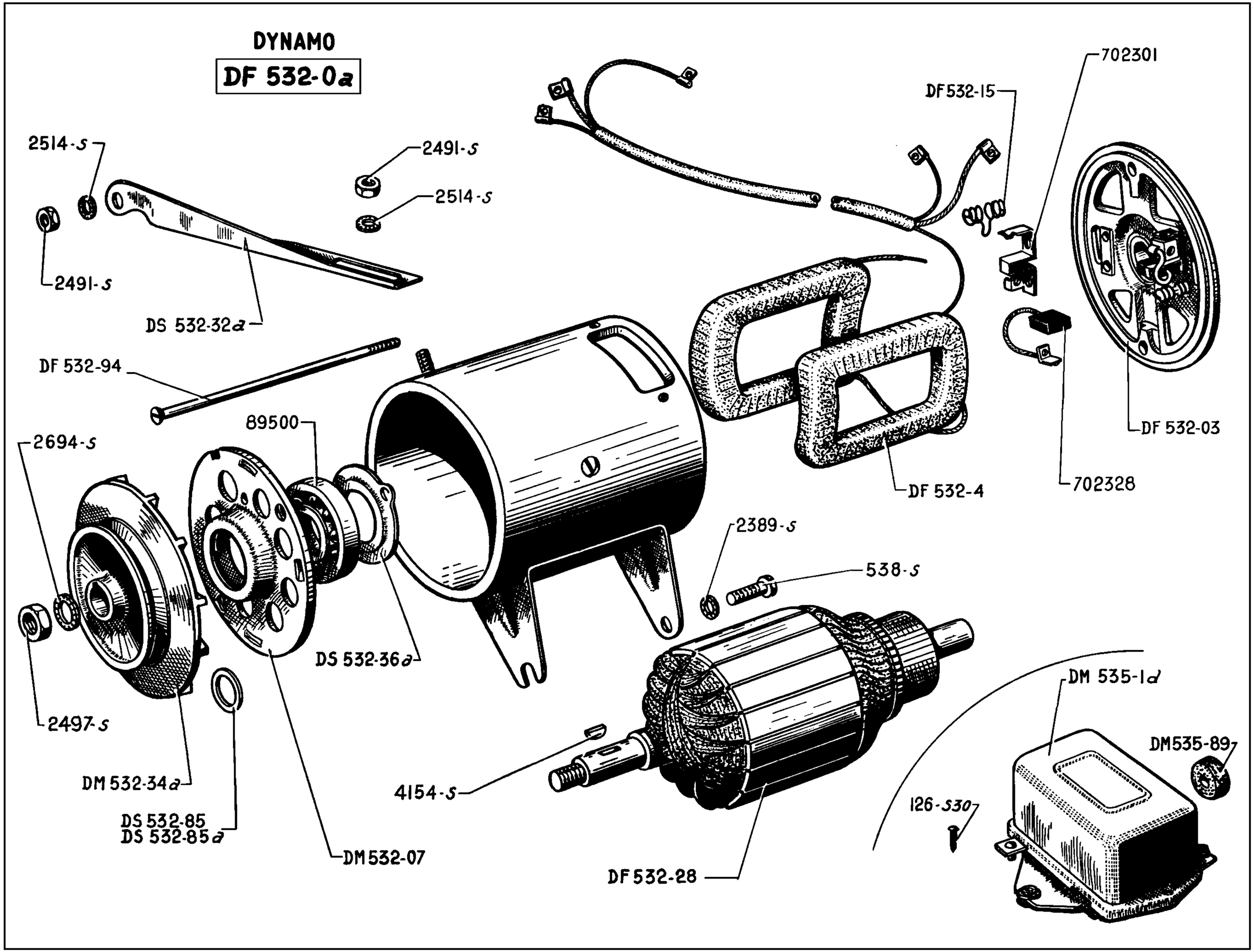
DYNAMO
DF 532-0a
2514-S
2491-S
2491-S
2514-S
DS 532-32a
DF 532-94
89500
2694-S
2497-S
DM 532-34a
DS 532-85
DS 532-85a
DM 532-07
DS 532-36a
4154-S
DF 532-28
2389-S
538-S
DF 532-4
DF532-15
702301
DF 532-03
702328
DM 535-1d
DM535-89
126-S30

NUMBER	DESCRIPTION	No. OFF
	Until October 1961	
DF 532-0a	Dynamo complete, 12 volts (R. VI).	1
DF 532-03	End plate, commutator end (R. VI).	1
DM 532-07	End plate complete with bearing, drive end (R. VI).	1
DF 532-4	Field coils, 12 volts (R. VI).	1
DF 532-15	Spring for brush holder (R. VI).	2
DF 532-28	Armature, 12 volts (R. VI).	1
DS 532-32a	Adjusting stay for belt.	1
DM 532-34a	Pulley (R. VI).	1
DS 532-36a	Plate for fixing bearing (R. VI).	1

NUMBER	DESCRIPTION	No. OFF
DS 532-85	Washer, 26 x 17.2 x 1, for adjusting pulley.	As nec.
DS 532-85a	Washer, 26 x 17.2 x 0.5, for adjusting pulley.	As nec.
DF 532-94	*Stud for assembling end plates (R. VI). No longer supplied.*	2
DM 535-1d	Regulator "Ducellier" 12 volts (R. VI).	1
DM 535-89	Bush, rubber, for regulator.	1
126-S 30	Screw, round head, pointed, 5 diameter x 18 mm long, for securing regulator (R. III).	3
538-S	Screw, hex. head, 9 diameter x 25 mm long, for securing dynamo on clutch bellhousing (R. III).	2

NUMBER	DESCRIPTION	No. OFF
2.389-S	Washer, shakeproof, 9.5 x 16.5, for screws securing dynamo (R. VI).	2
2.491-S	Nut, hex., 7 diameter x 100 pitch, for securing belt adjusting stay to water pump and dynamo (R. III).	2
2.497-S	Nut, hex., 12 diameter x 175 pitch, for securing the pulley (R. III).	1
2.514-S	Washer, shakeproof, 7.3 x 12, for nut securing belt adjuster (R. VI).	2
2.694-S	Washer, shakeproof, 12.5 x 22, for pulley nut (R. VI).	1
4.154-S	Woodruff key, 4 x 6.5 x 16, for pulley (R. III).	1
89.500	Ball bearing, 17 x 40 x 12 (R. VI).	1
702.301	Brush holder (R. VI).	2
702.328	Brush collector and earth (R. VI).	2

160 - DYNAMO PARIS-RHONE 12 VOLTS

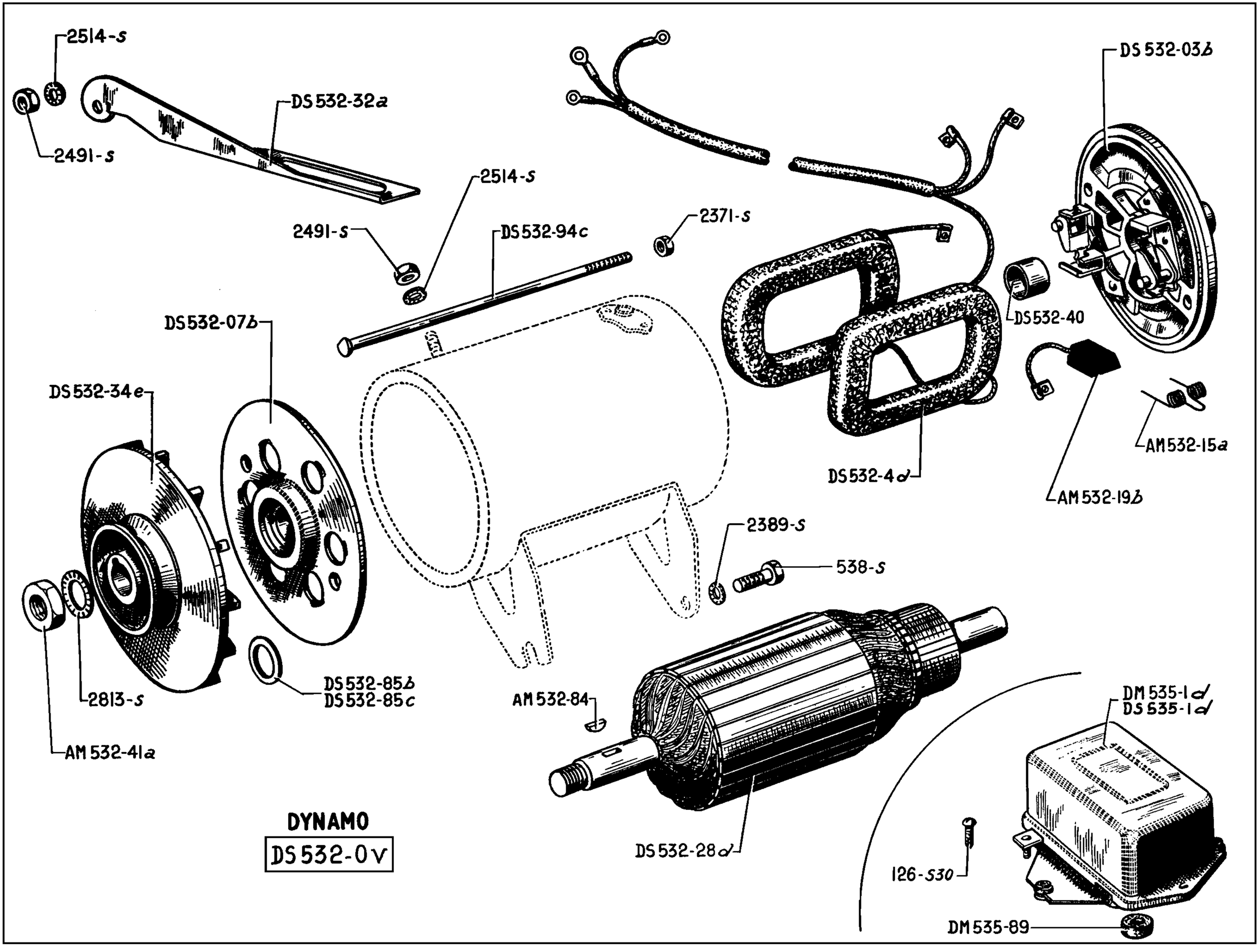

NUMBER	DESCRIPTION	No. OFF
	Since October 1961	
AM 532-15a	Spring for brush (R. VI).	2
AM 532-19b	Brush, positive and negative (R. VI).	2
AM 532-41a	Nut, hex., 15 x 150, for securing the pulley (R. VI).	1
AM 532-84	Key for securing the pulley (R. VI).	1
AM 532-94a	Stud for assembly end plates (R. VI).	2
DS 532-0v	*Dynamo complete, 103 mm diameter (G10C10) (R. VI). Until December 1963. Replaced by DS 532-0x; order in addition: 1-DS 511-22.*	1
DS 532-0x	Dynamo complete, with terminals (G10C31) (R. VI). Since December 1963.	1
DS 532-03b	End plate, commutator end (R. VI). Until December 1963.	1
DS 532-03c	End plate, commutator end, with terminals (R. VI). Since December 1963.	1
DS 532-07b	End plate, drive end, with bearing (R. VI).	1
DS 532-4d	Field coils (set) (R. VI). Until December 1963.	1
DS 532-4e	Field coils (set) (R. VI). Since December 1963.	1

NUMBER	DESCRIPTION	No. OFF
DS 532-28d	Armature (R. VI).	1
DS 532-32a	Adjusting stay for belt.	1
DS 532-34e	Pulley (R. VI).	1
DS 532-40	Bush for end plate, commutator end (R. VI).	1
DS 532-85b	Washer, 15.2 x 23 x 1 for adjusting the pulley.	As nec.
DS 532-85c	Washer, 15.2 x 23 x 0.5, for adjusting the pulley.	As nec.
DS 532-94c	*Stud for assembling end plates (R. VI). Replaced by AM 532-94a.*	2
DM 535-1d	Regulator "Ducellier" 12 volts (8243) (R. VI).	1
DS 535-1d	Regulator "Paris-Rhone" 12 volts (YT 2.113) (R. VI). Since September 1962.	1

NUMBER	DESCRIPTION	No. OFF
DM 535-89	Bush, rubber, for regulator.	1
126-S 30	Screw, round head, pointed, 5 diameter x 18 mm long, for securing regulator (R. III).	2
538-S	Screw, hex. head, 9 diameter x 25 mm long, for securing dynamo on clutch bellhousing (R. III).	2
2.371-S	*Nut, hex., 6 diameter x 100 pitch, for studs securing end plates (R. III). Replaced by 2.369-S.*	2
2.389-S	Washer, shakeproof, 9.5 x 16.5, for screws securing dynamo (R.VI).	2
2.491-S	Nut, hex., 7 diameter x 100 pitch, for securing belt adjusting stay to water pump and dynamo (R.III).	2
2.514-S	Washer, shakeproof, 7.3 x 12, for nut securing belt adjuster (R. VI).	2
2.813-S	Washer, shakeproof, 16.5 x 26, for the nut securing the pulley (R. VI).	1

The numbers underlined indicate new parts which do not appear on the illustration.

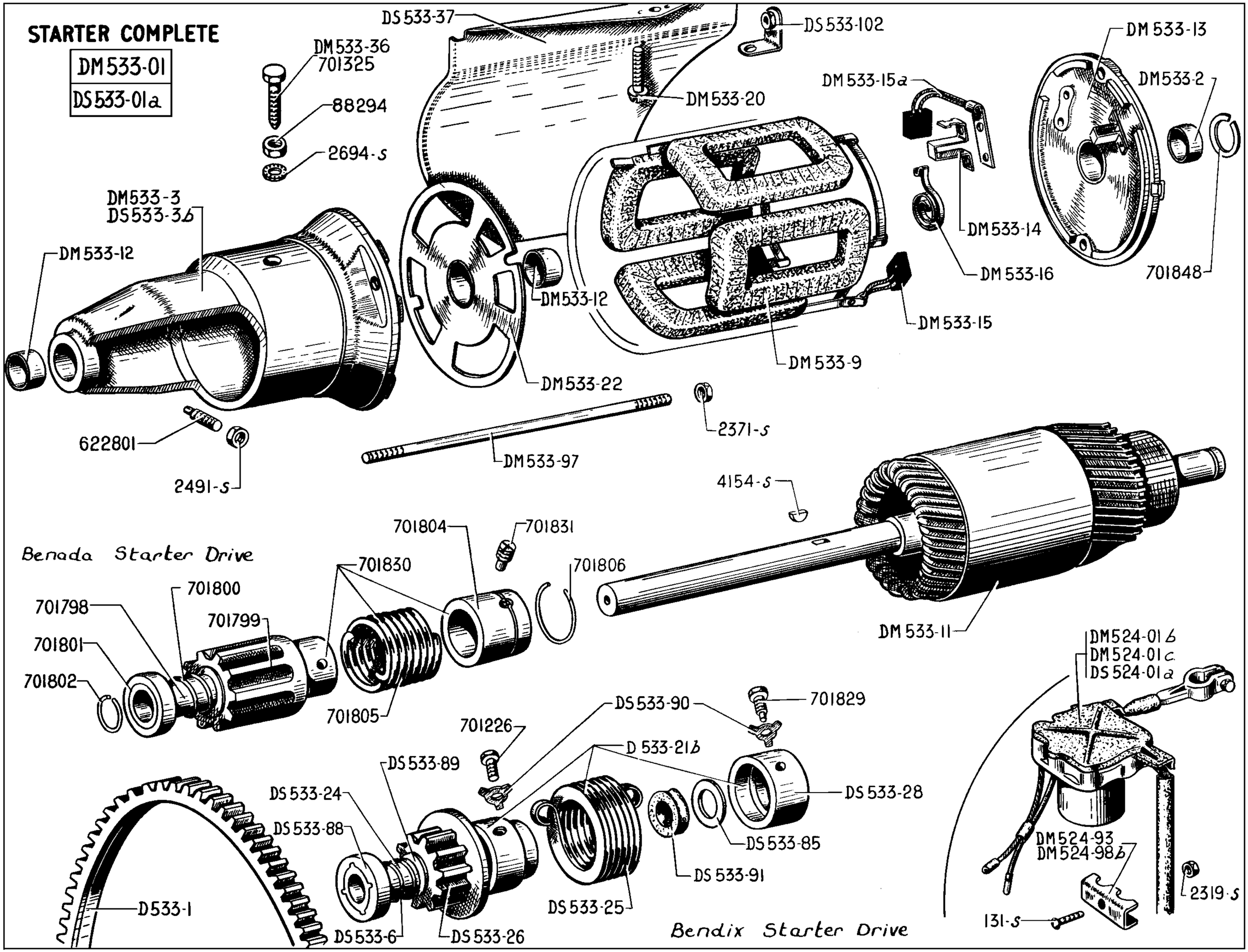
STARTER COMPLETE
DM533-01
DS533-01a
DS533-37
DS533-102
DM533-13
DM533-36
701325
88294
2694-s
DM533-20
DM533-15a
DM533-2
DM533-3
DS533-3b
DM533-14
DM533-12
DM533-16
701848
DM533-12
DM533-15
DM533-9
DM533-22
2371-s
622801
DM533-97
2491-s
4154-s
701804
701831
Benada Starter Drive
701830
701806
701800
701798
701799
701801
701802
DM533-11
DM524-01b
DM524-01c
DS524-01a
701805
DS533-90
701829
701226
D533-21b
DS533-89
DS533-28
DS533-24
DS533-88
DS533-85
DM524-93
DM524-98b
DS533-91
2319-s
D533-1
DS533-25
131-s
DS533-6
DS533-26
Bendix Starter Drive

NUMBER	DESCRIPTION	No. OFF
DM 524-01b	*Starter solenoid "Gelbon", 12 volts (R. VI). Until August 1961. Replaced by DM 524-01c.*	1
DM 524-01c	Starter solenoid "Gelbon", 12 volts (R. VI). August 1961 - September 1962.	1
DS 524-01a	Starter solenoid "Gelbon", 12 volts (R. VI). Since September 1962.	1
DM 524-93	Clamp, with screw, welded, for securing solenoid. Until August 1961.	1
DM 524-98b	Clamp retaining starter solenoid:	
	- Until August 1961.	2
	- Since August 1961.	1
DM 533-01	Starter complete (R. VI). Until September 1962.	1
DS 533-01a	Starter complete (R. VI). Since September 1962.	1
D 533-1	Starter gear ring (93 teeth, 272 mm diameter).	1
DM 533-2	Bush, 12 x 15 x 15, for end plate, commutator end (R. VI).	1
DM 533-3	End housing for starter, drive end (R. VI). Until September 1962.	1
DS 533-3b	End housing for starter, drive end (R. VI). Since September 1962.	1
DM 533-9	Field coils (set of 4) (R. VI).	1
DM 533-11	Armature (R. VI).	1
DM 533-12	Bush, 16 x 19 x 12 for end housing, drive end, and intermediate bearing plate (R. VI).	2
DM 533-13	End plate, complete, commutator end (R. VI).	1
DM 533-14	Brush holder (R. VI).	2
DM 533-15	Brush, positive (R. VI).	1

NUMBER	DESCRIPTION	No. OFF
DM 533-15a	Brush, negative (R. VI).	1
DM 533-16	Spring for brush (R. VI).	2
DM 533-20	Terminal only (R. VI).	1
DM 533-22	Intermediate bearing plate (R. VI).	1
DM 533-36	Screw, hex. head, 12 x 150, length under head 50 mm for securing starter on engine R.H. steering. January 1962 - September 1962.	1
DS 533-37	Cover for starter. Since September 1962.	1
DM 533-97	Stud for assembling starter (R. VI).	2
DS 533-102	Bracket with welded nut for securing starter cover. Since September 1962.	1
131-S	Screw, round head, 5 diameter x 50 mm long, for securing starter solenoid clamp (R. III).	1
2.319-S	Nut, hex., 5 x 75, for screw securing solenoid clamp (R. III).	1
2.371-S	*Nut, hex., 6 diameter x 100 pitch, for securing end plates (R. III). Replaced by 2.369-S.*	2
2.491-S	Nut, hex., 7 diameter x 100 pitch, for grub screw taking starter reaction (R. III).	2
2.694-S	Washer, shakeproof, 12.5 x 22, for nut locking starter screw to engine (R. VI).	1
4.154-S	Woodruff key, 4 x 6.5 x 16, for Bendix drive (R. III).	1
88.294	Nut, hex., 12 diameter x 150 pitch, for securing starter on engine (R. II).	1
622.801	Grub screw, 7 diameter x 20, for taking starter reaction (R. III).	2
701.325	Screw, hex. head, 12 diameter x 150 pitch, for securing starter on engine, 42 mm long under head (R. III). L.H. steering.	1
	- R.H. steering. Until January 1962.	
	- R.H. steering. Since September 1962.	

NUMBER	DESCRIPTION	No. OFF
701.848	Circlip (R. VI).	1
	BENADA PINION — STARTER	
701.798	Sleeve only, threaded (R. VI).	1
701.799	Pinion (R. VI).	1
701.800	Spring for pinion (R. VI).	1
701.801	Thrust ring for pinion (R. VI).	1
701.802	Circlip for thrust ring (R. VI).	1
701.804	Driving sleeve (R. VI).	1
701.805	Drive spring (R. VI).	1
701.806	*Circlip for securing driving sleeve (R. VI). No longer supplied.*	1
701.830	Starter drive complete (R. VI).	1
701.831	Grub screw, with 6 diameter dowel, for locking driving sleeve (R. VI).	1
	BENDIX PINION — STARTER WITH DAMPER SPRING	
DS 533-6	Spring for pinion (R. VI).	1
D 533-21b	Starter drive complete (R. VI).	1
DS 533-24	Threaded sleeve only (R. VI).	1
DS 533-25	Spring for drive (R. VI).	1
DS 533-26	Pinion (R. VI).	1
DS 533-28	Drive sleeve (R. VI).	1
DS 533-85	Washer, 16 x 21 x 0.3, for damper bush (R. VI).	1
DS 533-88	Thrust nut for pinion spring (R. VI).	1
DS 533-89	Spacer washer for pinion spring (R. VI).	1
DS 533-90	Lockplate for screw for drive sleeve and threaded sleeve (R. VI).	2
DS 533-91	Bush, rubber, 16 x 26.5 x 10.5 for damper (R. VI).	1
701.226	Screw, hex. head, 9.5 diameter x 16 mm long, for threaded sleeve (R. VI).	1
701.829	Screw, hex. head, 9.5 x 20 mm long, with 6 mm diameter dowel, for drive sleeve (R. VI).	1

164 - PARIS - RHONE STARTER 12 VOLTS

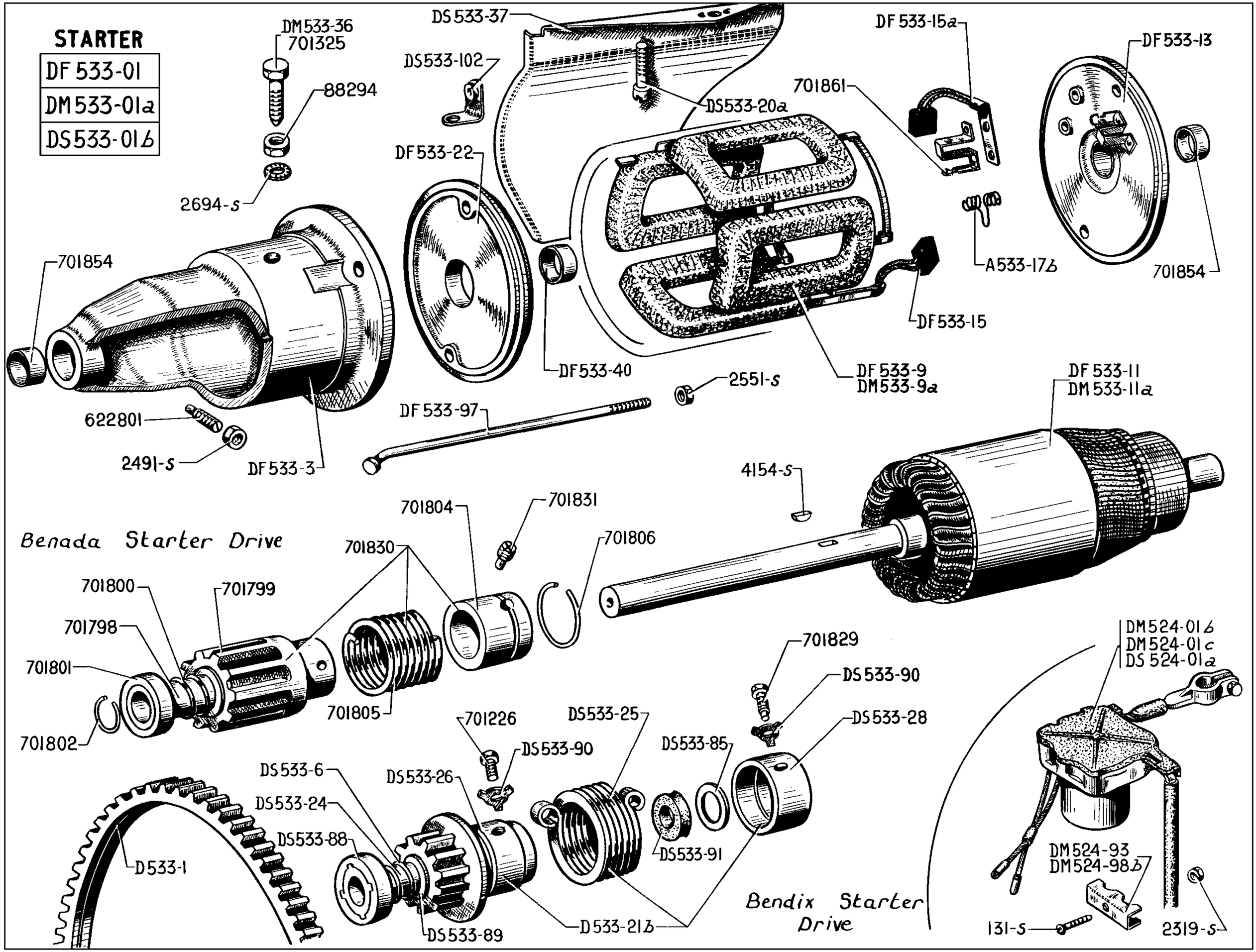

NUMBER	DESCRIPTION	No. OFF
A 533-17b	Spring for brush (R. VI).	4
DM 524-01b	*Starter solenoid "Gelbon" 12 volts (R. VI). Until August 1961. Replaced by DM 524-01c.*	1
DM 524-01c	Starter solenoid "Gelbon" 12 volts (R. VI). August 1961 - September 1962.	1
DS 524-01a	Starter solenoid "Gelbon" 12 volts (R. VI). Since September 1962.	1
DM 524-93	Clamp, with screw welded, for securing solenoid. Since August 1961.	1
DM 524-98b	Clamp retaining starter solenoid. Until August 1961.	2
	Since August 1961.	1
DF 533-01	*Starter complete (R. VI). Until January 1962. Replaced by DM 533-01a.*	1
DM 533-01a	Starter complete (R. VI). January 1962 - September 1962.	1
DS 533-01b	Starter complete. Since September 1962.	1
D 533-1	Starter gear ring (93 teeth, 272 mm diameter).	1
DF 533-3	Housing for starter, drive end (R. VI). Until September 1962.	1
DS 533-3c	Housing for starter, drive end (R. VI). Since September 1962.	1
DF 533-9	Field coils (R. VI). Until January 1962.	1
DM 533-9a	Field coils (R. VI). Since January 1962.	1
DF 533-11	Armature (R. VI). Until January 1962.	1
DM 533-11a	Armature (R. VI). Since January 1962.	1
DF 533-13	End plate, commutator end (R. VI).	1
DF 533-15	Brush, positive (R. VI).	2
DF 533-15a	Brush, negative (R. VI).	2
DS 533-20a	Terminal only (R. VI).	1

NUMBER	DESCRIPTION	No. OFF
DF 533-22	Intermediate bearing plate (R. VI).	1
DM 533-36	Screw, hex. head, 12 x 150, length under head 50 mm for securing starter on engine. R.H. steering. January 1962 - September 1962.	1
DS 533-37	Cover for starter. Since September 1962.	1
DF 533-40	Bush, 16 x 20 x 16, for the intermediate support plate (R. VI).	1
DF 533-97	Stud for assembly of starter (R. VI).	2
DS 533-102	Bracket with welded nut for securing starter cover. Since September 1962.	1
131-S	Screw, round head, 5 diameter x 30 mm long, for securing starter solenoid clamp (R. III).	1
2.319-S	Nut, hex., 5 x 75, for screw securing solenoid clamp (R. III).	1
2.491-S	Nut, hex., 7 diameter x 100 pitch, for grub screw taking starter reaction (R. III).	2
2.551-S	Nut, hex., 8 x 125, for securing the end plates (R. III).	2
2.694-S	Washer, shakeproof, 12.5 x 22, for nut locking starter screw to engine (R. VI).	1
4.154-S	Woodruff key, 4 x 6.5 x 16, for Bendix drive (R. III).	1
88.294	Nut, hex., 12 diameter x 150 pitch, for securing starter on engine (R. II).	1
622.801	Grub screw, 7 diameter x 20, for taking starter reaction (R. III).	2
701.325	Screw, hex. head, 12 diameter x 150 pitch, for securing starter on engine, 42 mm long under head (R. III). L.H. steering.	1
	- R.H. steering. Until January 1962.	
	- R.H. steering. Since September 1962.	
701.854	Bush for end housings, drive end and commutator end (R. VI).	2

NUMBER	DESCRIPTION	No. OFF
701.861	Brush holder (R. VI).	4
	BENADA PINION — STARTER	
701.798	*Sleeve only, threaded (R. VI). No longer supplied.*	1
701.799	Pinion (R. VI).	1
701.800	Spring for pinion (R. VI).	1
701.801	Thrust ring for pinion (R. VI).	1
701.802	*Circlip for thrust ring (R. VI). No longer supplied.*	1
701.804	Driving sleeve (R. VI).	1
701.805	Drive spring (R. VI).	1
701.806	*Circlip for securing driving sleeve (R. VI). No longer supplied.*	1
701.830	Starter drive complete (R. VI).	1
701.831	Grub screw with 6 diameter dowel, for locking driving sleeve (R. VI).	1
	BENDIX PINION — STARTER WITH DAMPER SPRING	
DS 533-6	Spring for pinion (R. VI).	1
D 533-21b	Starter drive complete (R. VI).	1
DS 533-24	Threaded sleeve only (R. VI).	1
DS 533-25	Spring for drive (R. VI).	1
DS 533-26	Pinion (R. VI).	1
DS 533-28	Drive sleeve (R. VI).	1
DS 533-85	Washer, 16 x 21 x 0.3, for damper bush (R. VI).	1
DS 533-88	Thrust nut for pinion spring (R. VI).	1
DS 533-89	Spacer washer for pinion spring (R. VI).	1
DS 533-90	Lockplate for screw for drive sleeve and threaded sleeve (R. VI).	2
DS 533-91	Bush, rubber, 16 x 26.5 x 10.5, for damper (R. VI).	1
701.226	Screw, hex. head, 9.5 diameter x 16 mm long, for threaded sleeve (R.VI).	1
701.829	Screw, hex. head, 9.5 x 20 mm long, with 6 mm diameter dowel, for drive sleeve (R. VI).	1

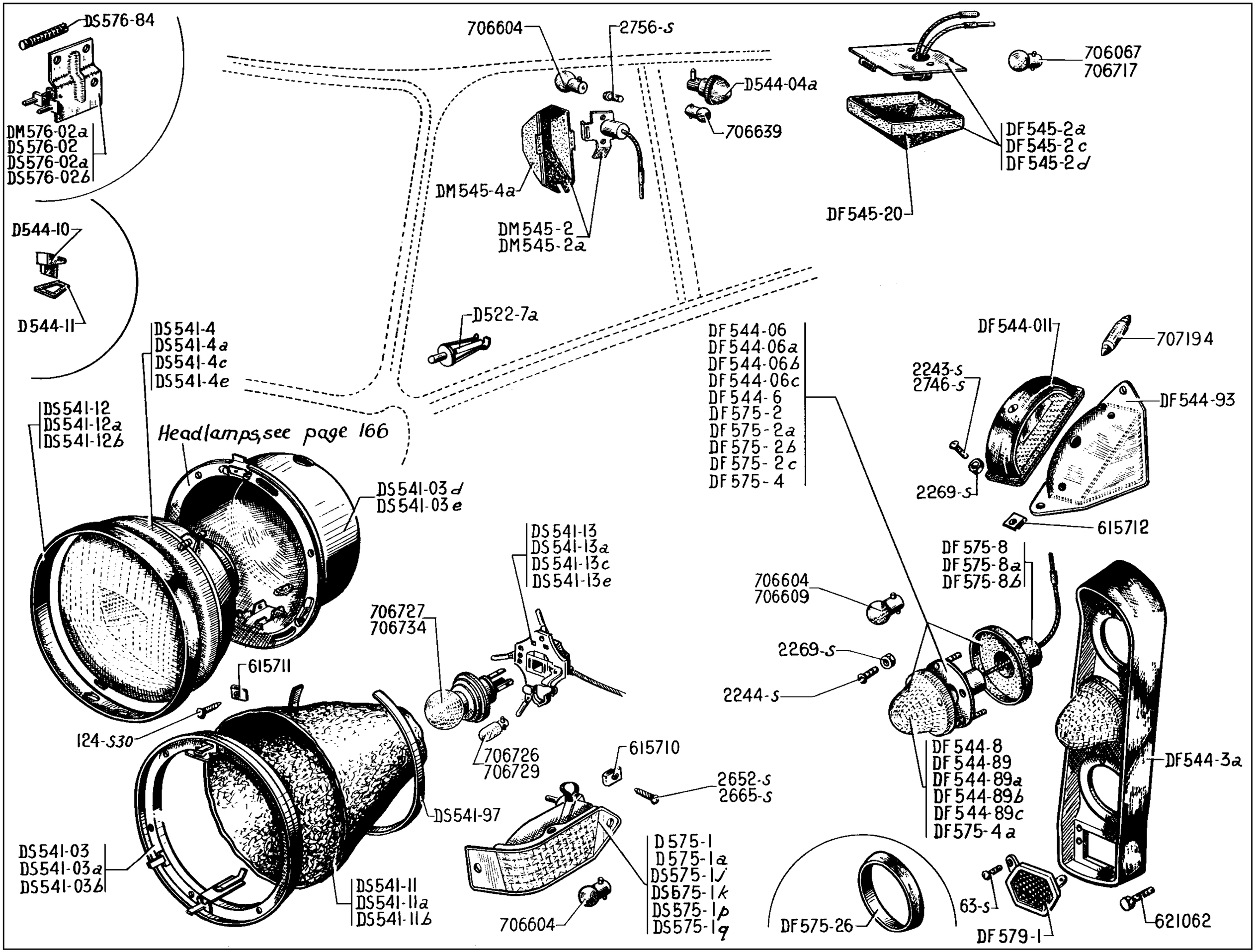
DS576-84
DM576-02a
DS576-02
DS576-02a
DS576-02b
706604
2756-s
D544-04a
706639
706067
706717
DF545-2a
DF545-2c
DF545-2d
DF545-20
DM545-4a
DM545-2
DM545-2a
D544-10
D544-11
D522-7a
DS541-4
DS541-4a
DS541-4c
DS541-4e
DF544-06
DF544-06a
DF544-06b
DF544-06c
DF544-6
DF575-2
DF575-2a
DF575-2b
DF575-2c
DF575-4
DF544-011
707194
2243-s
2746-s
DF544-93
2269-s
615712
DS541-12
DS541-12a
DS541-12b
Headlamps, see page 166
DS541-03d
DS541-03e
DS541-13
DS541-13a
DS541-13c
DS541-13e
706727
706734
706604
706609
DF575-8
DF575-8a
DF575-8b
2269-s
2244-s
615711
124-s30
706726
706729
615710
2652-s
2665-s
DS541-97
DF544-8
DF544-89
DF544-89a
DF544-89b
DF544-89c
DF575-4a
DF544-3a
DS541-03
DS541-03a
DS541-03b
DS541-11
DS541-11a
DS541-11b
D575-1
D575-1a
DS575-1j
DS575-1k
DS575-1p
DS575-1q
706604
DF575-26
63-s
DF579-1
621062

Make of Lamp	External Dia. of Lamp	Shape of Glass	Diameter of Glass	Number of Lamp	Number of Glass	Number of Rim	REMARKS
CIBIE	226	Convex	183	DS 541-1a	DS 541-4 (light unit assembly)	DS 541-12	Until April 1961.
CIBIE	226	Convex	183	DS 541-1n *Replaced by DS 541-1m*	DS 541-4e (light unit assembly)	DS 541-12	European Code. ITALY. All Types. April 1961 - September 1962.
CIBIE	226	Convex	183	DS 541-1m	DS 541-4e (light unit assembly)	DS 541-12	European Code. Since September 1962. GERMANY. Until January 1964.
CIBIE	226	Convex	183	DS 541-1t	DS 541-4h (light unit assembly)	DS 541-12	GERMANY. Since January 1964.
MARCHAL	226	Convex	183	DS 541-1b	DS 541-4a	DS 541-12a	Until April 1961.
MARCHAL	226	Convex	183	DS 541-1k	DS 541-4c (light unit assembly)	DS 541-12b	European Code. Since April 1962. GERMANY. Until January 1964.

NUMBER	DESCRIPTION	No. OFF
DS 541-03	*Support for Cibie headlamp (R. VI). Until April 1961. Replaced by DS 541-03e.*	1
DS 541-03a	Support for Marchal headlamp (R. VI). Until April 1961.	1
DS 541-03b	*Support for optical assembly for Cibie headlamp (R. VI). ITALY. All Types. April 1961 - September 1962. Replaced by DS 541-03e.*	2
DS 541-03d	Support for optical assembly Marchal (R. VI). Since April 1961.	2
DS 541-03e	Support for optical assembly Cibie (R. VI). Since September 1962.	2
DS 541-11	Dust cover for Cibie headlamp (R. VI). Until September 1962.	2
DS 541-11a	Dust cover for Marchal headlamp (R. VI). Until April 1961.	2

NUMBER	DESCRIPTION	No. OFF
DS 541-11b	*Dust cover for Cibie headlamp (R. VI). ITALY. All Types. April 1961 - September 1962. Replaced by DS 541-11.*	2
DS 541-13	Bulb holder for Cibie headlamp (R. VI). Until April 1961.	2
DS 541-13a	Bulb holder for Marchal headlamp (R. VI). Until April 1961.	2
DS 541-13c	Connector bulb holder for Marchal headlamp (R. VI). Since April 1961. GERMANY. Until January 1964.	2
DS 541-13e	Connector bulb holder for Cibie headlamp (R. VI). ITALY. All Types. Since April 1961. GERMANY. Until January 1964.	2
DS 541-13g	Connector, bulb holder, for Cibie headlamp (R. VI). GERMANY. Since January 1964.	2
DS 541-97	Clip for securing Cibie dust cover (R. VI). Until April 1961.	2
D 544-10	Tell-tale, red, for headlamp lighting on front wing (R. VI). Until September 1962.	2

NUMBER	DESCRIPTION	No. OFF
D 544-11	Sealing joint for tell-tale on front wing. Until September 1962.	2
124-S 30	Screw, round head, pointed, 5 diameter x 12.5 mm long, for securing headlamps on wing (R. III).	12
615.711	Nut, self-locking, for 5 diameter screws securing headlamps (R. VI).	12
706.726	Bulb, 12 volt, 4 watt (side lamp) (R. VI). ITALY. Since September 1960. All Types. Since April 1961.	2
706.727	Bulb, 12 volt,45/40 watts for headlamps (R. VI). ITALY. Since September 1960. All Types. Since April 1961.	2
706.729	Bulb, 12 volt, 4 watts, 2 pin (R. VI). Until April 1961.	2
706.734	Bulb, 12 volt, 36/45 watts, for headlamps (R. VI). Until April 1961.	2

The numbers underlined indicate new parts which do not appear on the illustration.

NUMBER	DESCRIPTION	No. OFF
	INTERIOR LIGHTING	
D 522-7a	Switch for interior lighting, on door pillar, length of button 18 mm (R. VI). CONFORT. Since May 1961.	1 2
DF 545-2a	Interior lighting unit, rear (R. VI). Until May 1961.	1
DF 545-2c	Interior lighting unit, rear, SEIMA, with one wire (R. VI). LUXE. Since May 1961.	1
DF 545-2d	Interior lighting unit, rear, SEIMA, with 2 wires (R. VI). CONFORT. Since May 1961.	1
DM 545-2	Lighting unit for interior on central pillar, without bulb (R. VI). CONFORT. Until May 1961. LUXE. Until September 1964.	1
DM 545-2a	Lighting unit for interior, insulated on central pillar (without bulb) (R. VI). CONFORT. May 1961 - September 1964.	1
DM 545-2b	Lighting unit for interior, 1 wire, on centre pillar, without bulb (R. VI). LUXE. Since September 1964.	1
DM 545-2c	Lighting unit for interior, 2 wire, on centre pillar, without bulb (R. VI). CONFORT. Since September 1964.	1
DM 545-4a	*Glass for lighting unit (R. VI). Until September 1964. Replaced by AM 565-4.*	1
DM 545-4c	Glass for lighting unit (R. VI). Since September 1964.	1
DF 545-20	Cover for interior lighting unit SEIMA (R. VI). Since May 1961.	1
2.756-S	Screw, round head, 3.5 diameter x 9.5 mm long, for securing lighting units on central pillar and interior (R. VI).	4
706.067	Bulb, 12 volts, 7 watts, interior lighting unit (R. VI). Since May 1961.	1
706.604	Bulb, 12 volts, 15 watts, lighting unit on central pillar (R. VI).	1

NUMBER	DESCRIPTION	No. OFF
706.717	Bulb, 12 volts, 7 watts, 2 pin for interior lighting unit (R. VI). Until May 1961.	1
	DIRECTION INDICATORS — FRONT AND REAR — PARKING LIGHT ALL TYPES FOR GERMANY Until November 1964	
D 544-04a	Parking light (without bulb) (R. VI). Until February 1962.	2
DF 544-3a	Housing for rear direction indicators on wing.	2
DF 544-89a	Glass, orange, "SEIMA", for direction indicators, rear, right and left (R. VI). Since April 1961.	2
DF 544-89c	Glass, orange, "AXO", for direction indicators, rear (R. VI). Since January 1962.	2
D 575-1	*Direction indicator, "AXO", front L.H. (without bulb) (R. VI). Until September 1964. Replaced by DS 575-1f.*	1
D 575-1a	*Direction indicator, "AXO", front R.H. (without bulb) (R. VI). Until September 1964. Replaced by DS 575-1g.*	1
DS 575-1f	Direction indicator, "AXO" (white) front L.H. (without bulb) (R. VI). Since September 1964.	1
DS 575-1g	Direction indicator, "AXO" (white) front R.H. (without bulb) (R. VI). Since September 1964.	1
DS 575-1j	Direction indicator, front, left, "AXO" orange and white glass, (without bulb) (R. VI). ITALY. Since July 1961.	1
DS 575-1k	Direction indicator, front, right, "AXO", orange and white glass, (without bulb) (R. VI). ITALY. Since July 1961.	1
DS 575-1p	Direction indicator, front, left, "AXO" orange glass without bulb (R. VI). GERMANY. Since July 1961.	1
DS 575-1q	Direction indicator, front, right, "AXO" orange glass without bulb (R. VI). GERMANY. Since July 1961.	1

NUMBER	DESCRIPTION	No. OFF
DS 575-1r	Direction indicator, SEIMA, (white), front, L.H. (R. VI). Since March 1963.	1
DS 575-1s	Direction indicator, SEIMA, (white), front, R.H. (R. VI). Since March 1963.	1
DF 575-2	Direction indicator, rear, left, "SEIMA", orange glass (without bulb), length of socket wire 0.430 m (R. VI). Since April 1961.	1
DF 575-2a	Direction indicator, rear, right, "SEIMA" orange glass (without bulb) length of socket wire 0.650 m (R. VI). Since April 1961.	1
DF 575-2b	Direction indicator, rear, left, "AXO" orange glass (without bulb) length of socket wire 0.430 m (R. VI). Since January 1962.	1
DF 575-2c	Direction indicator, rear, right, "AXO" orange glass (without bulb) length of socket wire 0.650 m (R. VI). Since January 1962.	1
DF 575-4	Direction indicators, rear, Pécazeaux, right and left (without bulb) (R. VI). Until April 1961.	2
DF 575-4a	Glass, orange, Pécazeaux, for direction indicator, rear (R. VI). Until April 1961.	2
DF 575-8	Joint, rubber, for rear direction indicator, Pécazeaux (R. VI). Until April 1961.	2
DF 575-8a	Sealing joint, rubber "SEIMA", for rear direction indicators (R. VI). Since April 1961.	2
DF 575-8b	Sealing joint, rubber, "AXO", for rear direction indicators (R. VI). Since January 1962.	2

The numbers underlined indicate new parts which do not appear on the illustration.

NUMBER	DESCRIPTION	No. OFF
DF 575-26	Collar securing glass for Pécazeaux rear direction indicator (R. VI). Until April 1961.	2
2.244-S	Screw, round head, 4 x 16 (cruciform slot) for securing rear indicators on bracket (R. VI). Until April 1961.	4
2.652-S	Screw, Parker, 5 x 15, for securing front direction indicator (R. VI).	4
2.665-S	Screw, round head, Parker, 5 x 16, for securing front direction indicator (R. VI).	4
615.710	Nut clips for screws, 5 mm, for securing front direction indicator (R. VI).	4
706.604	Bulb, 12 volts, 15 watts, for direction indicators, front and rear (R. VI).	4
706.639	Bulb, 12 volts, 1.5 watt for stop light (R. VI). Until February 1962.	2

DIRECTION INDICATORS, FRONT AND REAR GERMANY
Since November 1964

NUMBER	DESCRIPTION	No. OFF
DF 544-3a	Bracket for rear direction indicators on wing.	2
DF 544-89f	Glass, yellow, Seima, for direction indicators, rear, right and left-hand (R. VI).	2
DS 575-1p	Front direction indicator, left-hand (Axo) orange, without bulb (R. VI).	1
DS 575-1q	Front direction indicator, right-hand (Axo) orange, without bulb (R. VI).	1
DF 575-2d	Rear direction indicator, left-hand, Seima, yellow, without bulb, length of socket wire 430 mm (R. VI).	1
DF 575-2e	Rear direction indicator, right-hand, Seima, yellow, without bulb, length of socket wire 650 mm (R. VI).	1
DF 575-8a	Joint, rubber, "SEIMA" sealing the rear direction indicators (R. VI).	2
2.665-S	Screw, round head, Parker, 5 x 16, for securing front traffic indicator (R. VI).	4
615.710	Nut clips for 5 mm screws, securing front traffic indicators (R. VI).	4
706.604	Bulb, 12 volts, 15 watts, for front and rear traffic indicators (R. VI).	4

REAR LAMPS-STOP LIGHT REFLECTOR
REAR TRAFFIC INDICATORS
ALL TYPES FOR GERMANY
Until November 1964

NUMBER	DESCRIPTION	No. OFF
DF 544-06	Red side and stop lights "Seima", rear, left-hand (without bulb), length of socket wire 430 mm (R. VI). Since April 1961.	2
DF 544-06a	Red side and stop lights "Seima", rear, right-hand, (without bulb) length of socket wire 650 mm (R. VI). Since April 1961.	2
DF 544-06b	Red side and stop lights, AXO, rear, left-hand, (without bulb), length of socket wire 430 mm (R. VI). Since January 1962.	2
DF 544-06c	Red side and stop lights, Axo, rear, right-hand, (without bulb), length of socket wire 650 mm (R. VI). Since January 1962.	2
DF 544-011	Rear light and number plate illuminating light (without bulb) (R. VI).	2
DF 544-3a	Bracket for rear lights on wing (R. VI).	2
DF 544-6	Rear lights Pécazeaux, side and stop, (without bulb) (R. VI). Until April 1961.	4
DF 544-8	Red globe for rear side and stop light, Pécazeaux, (R. VI). Until April 1961.	4
DF 544-89	Red globe for rear side and stop "Seima" (R. VI). Since April 1961.	4
DF 544-89b	Red globe for rear and stop light, AXO (R. VI). Since January 1962.	4
DF 544-93	Bracket for rear light.	2
DF 575-8	Joint, rubber, for rear lights, Pécazeaux (R. VI). Until April 1961.	4
DF 575-8a	Joint, rubber, sealing the rear lights "SEIMA" (R. VI). Since April 1961.	4
DF 575-8b	Joint, rubber, sealing the rear lights "AXO" (R. VI). Since January 1962.	4
DF 575-26	Collar, securing the rear light bulbs, Pécazeaux (R. VI). Until April 1961.	4
DM 576-02a	Switch for stop light (R. VI). Until August 1961.	1
DS 576-02	*Switch for stop light (R. VI). August 1961 - September 1962. Replaced by DS 576-02a.*	1
DS 576-02a	Switch for stop light (R. VI). L.H. steering. Sept. 1962-Nov. 1964.	1

The numbers underlined indicate new parts which do not appear on the illustration.

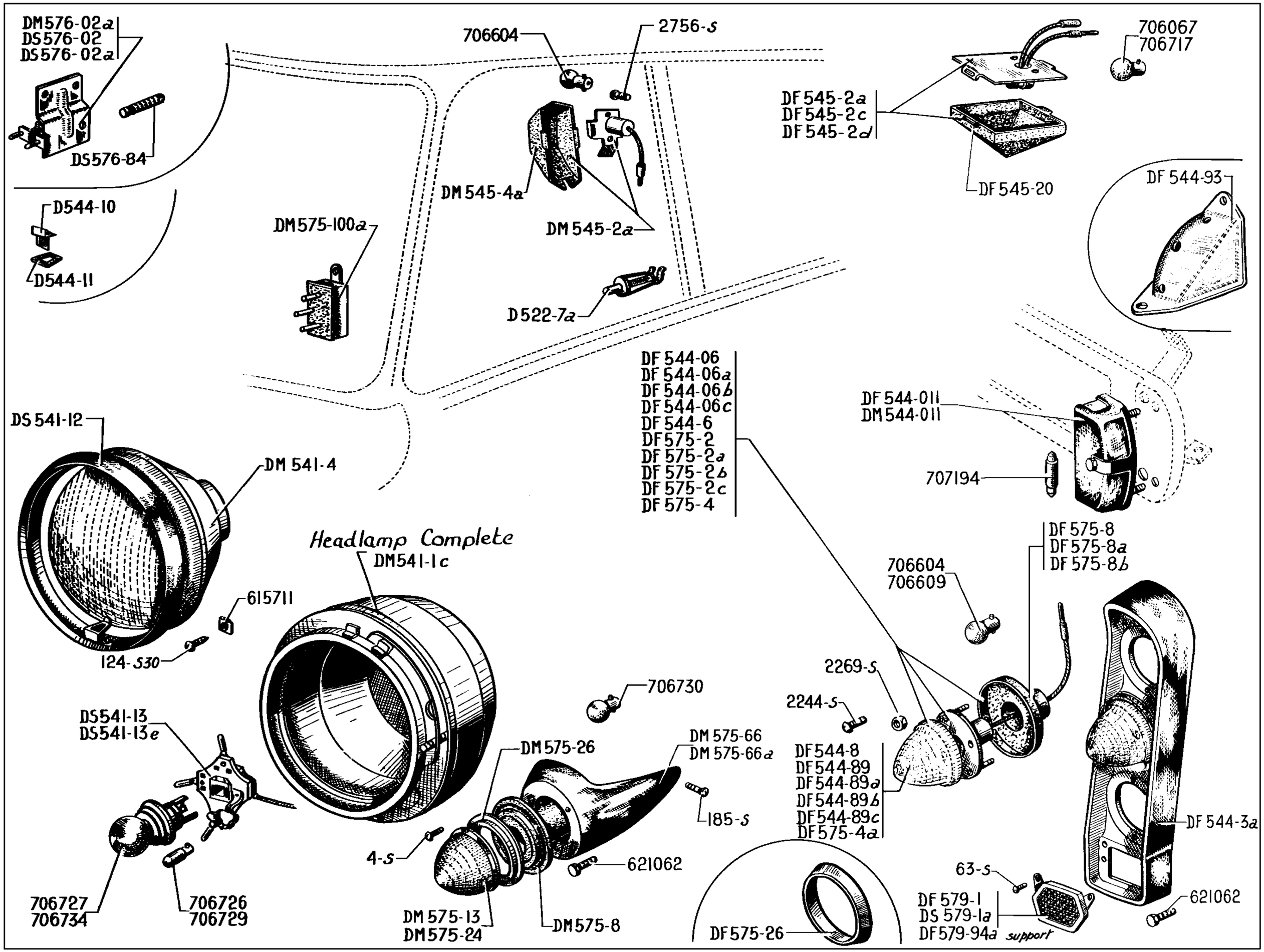
DM576-02a
DS576-02
DS576-02a
DS576-84
706604
2756-s
706067
706717
DF545-2a
DF545-2c
DF545-2d
DF545-20
DM545-4a
DM545-2a
DF544-93
D544-10
D544-11
DM575-100a
D522-7a
DF544-06
DF544-06a
DF544-06b
DF544-06c
DF544-6
DF575-2
DF575-2a
DF575-2b
DF575-2c
DF575-4
DF544-011
DM544-011
707194
DS541-12
DM541-4
Headlamp Complete
DM541-1c
615711
124-S30
DF575-8
DF575-8a
DF575-8b
706604
706609
706730
2269-s
2244-s
DS541-13
DS541-13e
DM575-26
DM575-66
DM575-66a
DF544-8
DF544-89
DF544-89a
DF544-89b
DF544-89c
DF575-4a
185-s
DF544-3a
4-s
621062
63-s
706727
706734
706726
706729
DM575-13
DM575-24
DM575-8
DF575-26
DF579-1
DS579-1a
DF579-94a
support
621062

Make of Lamp	External Dia. of Lamp	Shape of Glass	Diameter of Glass	Number of Lamp	Number of Glass	Number of Rim	REMARKS
CIBIE	226	Convex	183	DM 541-1c (R. VI) (without light unit assembly)	DM 541-4 (R. VI) (light unit assembly)	DS 541-12 (R. VI)	Headlamp supplied without light unit for U. S. A. Until April 1961.
CIBIE	226	Convex	183	DM 541-1c (R. VI) (without light unit assembly)	DS 541-4f (R. VI) (light unit assembly)	DS 541-12 (R. VI)	European Code. Headlamp supplied without light unit for U. S. A. Since April 1961.

NUMBER	DESCRIPTION	No. OFF
DS 541-13	Holder, bulb, for Cibie headlamp (R. VI). Until April 1961.	2
DS 541-13e	Connector, for Cibie headlamp. European code (R. VI).	2
D 544-10	Tell-tale, red, for headlamp lighting on front wing (R. VI). Until September 1962.	2
D 544-11	Sealing joint for tell-tale on front wing. Until September 1962.	2
124-S 30	Screw, round head, pointed, 5 diameter x 12.5 mm long, for securing headlamps on wing (R. III).	12
615.711	Nut, self-locking, for 5 diameter screws securing headlamps (R. VI).	12
706.726	Bulb, 12 volts, 4 watts (side light), for headlamps (R. VI). Since April 1961. (European code).	2
706.727	Bulb, 12 volts, 45/40 watts for headlamps (R. VI). Since April 1961. (European code).	2
706.729	Bulb, 12 volts, 4 watts, 2 pins for headlamps (R. VI). Until April 1961.	2
706.734	Bulb, 12 volts, 45 watts for headlamps (R. VI). Until April 1961.	2

INTERIOR LIGHTING

NUMBER	DESCRIPTION	No. OFF
D 522-7a	Switch for interior lighting on door pillar, length of button 18 mm (R. VI).	2
DF 545-2a	Interior lighting unit rear (R. VI). Until May 1961.	1
DF 545-2c	Interior lighting unit, rear, "SEIMA" with one wire (R. VI). LUXE. Since May 1961.	1
DF 545-2d	Interior lighting unit, rear, "SEIMA" with two wires (R. VI). CONFORT. Since May 1961.	1
DM 545-2a	Lighting unit for interior, insulated, on central pillar (without bulb) (R. VI). Until September 1964.	1
DM 545-2c	Lighting unit for interior, insulated, on central pillar (without bulb) (R. VI). Since September 1964.	1
DM 545-4a	*Glass for lighting unit (R. VI). Until September 1964. Replaced by 545-4.*	1
DM 545-4c	Glass for lighting unit (R. VI). Since September 1964.	1
DF 545-20	Cover for interior lighting unit "SEIMA" (R. VI). Since May 1961.	1
2.756-S	Screw, round head, 3.5 diameter x 9.5 mm long, for securing lighting units on central pillar and interior unit (R. VI).	4
706.067	Bulb, 12 volts, 7 watts, for interior lighting unit (R. VI). Since May 1961.	1
706.604	Bulb, 12 volts, 4 watts, for light on central pillar (R. VI).	1
706.717	Bulb, 12 volts, 7 watts, 2 pins, for interior lighting unit (R. VI). Until May 1961.	1

The numbers underlined indicate new parts which do not appear on the illustration.

NUMBER	DESCRIPTION	No. OFF
	DIRECTION INDICATORS FRONT, LUCAS.	
DM 575-8	Joint, rubber, for front direction indicator (R. VI).	2
DM 575-13	Glass, white, for front direction indicator (R. VI).	2
DS 575-13	Glass, amber, for front direction indicator (Scintex) (R. VI). Since September 1963.	2
DM 575-24	Direction indicator, front, complete white (without bulb) (R. VI). Until September 1964.	2
DM 575-24a	Direction indicator, front, complete, white (without bulb) Scintex (R. VI). Since September 1964.	2
DS 575-24	Direction indicator, front Scintex, amber (R. VI). Since September 1963.	2
DM 575-26	Collar for front direction indicator (R. VI).	2
DM 575-66	Housing for securing front direction indicator, L.H.	1
DM 575-66a	Housing for securing front direction indicator, R.H.	1
4-S	Screw, round head, 3 diameter x 12 mm long, for securing front direction indicators (R. III).	6
185-S	Screw, raised countersunk head, 5 diameter x 15 mm long, for securing rear of direction indicator housing (R. III).	2
621.062	Screw, hex. head, 5 diameter x 14 mm long, for securing front of direction indicator housing (R. III).	4
706.730	Bulbs, 12 volts, for lamps (R. VI).	2
	DIRECTION INDICATORS — REAR	
DF 544-3a	Housing for rear direction indicators on wing.	2

NUMBER	DESCRIPTION	No. OFF
DF 544-89a	Glass orange "SEIMA" for direction indicators, rear, right and left (R. VI). Since April 1961.	2
DF 544-89c	Glass orange "AXO" for direction indicators, rear, right and left (R. VI). Since January 1962.	2
DF 575-2	Direction indicator, rear, left, "SEIMA" orange glass (without bulb), length of socket wire 0.430 m (R. VI). Since April 1961.	1
DF 575-2a	Direction indicator, rear, right, "SEIMA" orange glass (without bulb), length of socket wire 0.650 m (R. VI). Since April 1961.	1
DF 575-2b	Direction indicator, rear, left, "AXO" orange glass (without bulb), length of socket wire 0.430 m (R. VI). Since January 1962.	1
DF 575-2c	Direction indicator, rear, right, "AXO" orange glass (without bulb), length of socket wire 0.650 m (R. VI). Since January 1962.	1
DF 575-4	Direction indicators, rear, Pécazeaux, right and left (without bulb) (R. VI). Until April 1961.	2
DF 575-4a	Glass orange Pécazeaux for direction indicator, rear, (R. VI). Until April 1961.	2
DF 575-8	Joint, rubber, for rear direction indicator Pécazeaux (R. VI). Until April 1961.	2
DF 575-8a	Sealing joint, rubber, "SEIMA", for rear direction indicators (R. VI). Since April 1961.	2
DF 575-8b	Sealing joint, rubber, "AXO", for rear direction indicators (R. VI). Since January 1962.	2
DF 575-26	Collar retaining the globe of the rear direction indicators Pécazeaux (R. VI). Until April 1961.	2

NUMBER	DESCRIPTION	No. OFF
2.244-S	Screw, round head, 4 diameter x 16 mm long (cruciform slot), for securing rear lights to housings (R. VI).	4
706.604	Bulb, 12 volts, 15 watts, for rear lights (R. VI).	2
	REAR LAMP — STOP LIGHT REFLECTOR REAR LIGHTS	
DF 544-06	Rear and stop light, red, L.H. SEIMA, without bulb, length of socket wire 430 mm (R. VI). Since April 1961.	2
DF 544-06a	Rear and stop light, red, R.H. SEIMA, without bulb, length of socket wire 650 mm (R. VI). Since April 1961.	2
DF 544-06b	Rear and stop light, red, L.H. AXO, without bulb, length of socket wire 430 mm (R. VI). Since January 1962.	2
DF 544-06c	Rear and stop light, red, R.H. AXO, without bulb, length of socket wire 650 mm (R. VI). Since January 1962.	2
DF 544-011	Rear lamp for illuminated registration plate, without bulb (R. VI). Until September 1960.	2
DM 544-011	*Rear lamp LUCAS, for illuminating registration plate on rear swinging bracket, without bulb (R. VI). Since September 1960. Replaced by DS 544-08.*	2
DF 544-3a	Housing for rear lights on wing (R. VI).	2
DF 544-6	Rear and stop light Pécazeaux (without bulb) (R. VI). Until April 1961.	2

The numbers underlined indicate new parts which do not appear on the illustration.

NUMBER	DESCRIPTION	No. OFF
DF 544-8	Glass, red, for rear and stop light, Pécazeaux (R. VI). Until April 1961.	4
DF 544-89	Glass, red, for rear and stop light, SEIMA, (R. VI). Since April 1961.	4
DF 544-89b	Glass, red, for rear and stop light, AXO (R. VI). Since January 1962.	4
DF 544-93	Housing for rear light. Until September 1960.	2
DF 575-8	Joint, rubber, for rear light, Pécazeaux (R. VI). Until April 1961.	4
DF 575-8a	Joint, rubber, for rear light, SEIMA (R. VI). Since April 1961.	4
DF 575-8b	Joint, rubber, for rear light, AXO (R. VI). Since January 1962.	4

NUMBER	DESCRIPTION	No. OFF
DF 575-26	Collar retaining the glass of the rear direction indicator Pécazeaux (R. VI). Until April 1961.	4
DM 575-100a	Flashing unit klaxon 12 volts (R. VI).	1
DM 576-02a	Switch, stop light (R. VI). Until August 1961.	1
DS 576-02	*Switch, stop light (R. VI). August 1961 - September 1962. Replaced by DS 576-02a.*	1
DS 576-02a	Switch, stop light (R. VI). September 1962 - November 1964.	1
DS 576-02b	Switch, stop light (R. VI). Since September 1964.	1
DS 576-84	Screw, headless, 5 diameter x 40 mm long, for adjusting stop light switch. Since August 1961.	1
DF 579-1	Reflector, rear (R. VI). Until May 1960. Since November 1961.	2
DS 579-1a	*Reflector, round (R. VI). May 1960 - November 1961. Replaced by DF 579-1. Leave out when fitting the round reflector bracket.*	2

NUMBER	DESCRIPTION	No. OFF
DF 579-94a	*Support for round reflector (R. VI). May 1960 - November 1961. No longer supplied.*	2
63-S	Screw, round head, 3 diameter x 10 mm long, for securing reflector (R. III).	4
2.244-S	Screw, round head, 4 diameter x 16 mm long (cruciform slot) for securing rear direction indicator to housings (R. VI). Until April 1961.	8
2.269-S	Nut, hex., 4 x 75, for screws securing the rear lamps in their housings (R. III). Until April 1961.	8
621.062	Screw, hex. head, 5 diameter x 14 mm long, for securing rear direction indicators to wing (R. III).	6
706.604	Bulb, 12 volts, 15 watts, for rear stop light. (R. VI).	2
706.609	Bulb, 12 volts, 4 watts, for rear lights (R. VI).	2
707.194	Bulb, 12 volts, 4 watts, 2 pins for rear lamp (R. VI).	2

The numbers underlined indicate new parts which do not appear on the illustration.

NUMBER	DESCRIPTION	No. OFF
	Until September 1964	
	CABLES BY THE METRE R.VI	
3.732	Cable, 20/10, single core.	As nec.
3.733	Cable, 12/10, single core.	As nec.
921.552	Cable, 40 mm^2, for battery.	As nec.
	BATTERY CABLE Until September 1964	
DM 511-8c	Cable for negative battery terminal to earth on water pump, 590 mm long. Until November 1963.	1
DM 511-8d	*Cable for negative battery terminal to earth on water pump, 480 mm long. November 1963 - March 1964. Replaced by DM 511-8e.*	1
DM 511-8e	Cable for negative battery terminal to earth on water pump, 480 mm long. Since March 1964.	1
	CABLE HARNESS Until February 1962	
DF 511-4	Wiring harness for rear lamp in tail-board.	1
DA 511-23	*Wiring harness, front, AMBULANCE Until September 1960. Replaced by DA 511-23b.*	1
DA 511-23b	Wiring harness, front, AMBULANCE Since September 1960.	1
DB 511-23	Wiring harness, front, BREAK. R.H. steering.	1
DB 511-23c	Wiring harness, front, arrangement with two switches on front door pillar. CONFORT. Since May 1961.	1
DF 511-23	*Wiring harness, front. Except AMBULANCE. Until September 1960. Replaced by DF 511-23a.*	1
DF 511-23a	Wiring harness, front. Except AMBULANCE. Since September 1960. CONFORT. Until May 1961.	1

NUMBER	DESCRIPTION	No. OFF
DB 511-24	Wiring harness, rear:	
	- LUXE AND COMMERCIAL.	1
	- CONFORT, AMBULANCE and FAMILY TYPE. Until May 1961.	1
DB 511-24a	Wiring harness, rear. BREAK. R.H. steering.	1
DB 511-24b	Wiring harness, rear. CONFORT and AMBULANCE. Since May 1961.	1
DF 511-24b	Wiring harness, rear. FAMILY TYPE. Since May 1961.	1
DM 511-25	Wiring harness, for headlamp and direction indicator, front, L.H. and horn.	1
DM 511-25a	Wiring harness, for headlamp and direction indicator, front, R.H.	1
DF 511-26	Wiring harness for rear lights on rear wing, L.H. Until April 1961.	1
DF 511-26a	Wiring harness for rear lights on rear wing, R.H. Until April 1961.	1
DM 511-63	Cable, earth, (headlight and front direction indicator).	1
	LEFT-HAND STEERING February 1962—September 1962	
	FITTING WITHOUT PARKING LIGHTS ON CENTRE PILLAR AND 4 FUSES WIRING HARNESS	
DF 511-4	Wiring harness for rear lamp in tail-board.	1
DA 511-23f	Wiring harness, front. AMBULANCE	1

NUMBER	DESCRIPTION	No. OFF
DB 511-23p	*Wiring harness, front, LUXE. Replaced by DB 511-44.*	1
DB 511-23r	*Wiring harness, front. CONFORT. Replaced by DB 511-44.*	1
DB 511-24d	Wiring harness, rear, LUXE.	1
DB 511-24e	Wiring harness, rear, CONFORT.	1
DF 511-24d	*Wiring harness, rear, FAMILY TYPE LUXE. Replaced by DF 511-36.*	1
DF 511-24e	Wiring harness, rear. FAMILY TYPE CONFORT.	1
DM 511-25	Wiring harness, for headlamp and direction indicator, front, and L.H. and horn.	1
DM 511-25a	Wiring harness, for headlamp and direction indicator, front, R.H.	1
DM 511-63	Wiring harness, earth, headlight and front indicator.	2
	LEFT HAND STEERING September 1962 – September 1964 WITH 4 FUSES	
DF 511-4	Wiring harness for rear lamp.	1
DA 511-44	Wiring harness, front. AMBULANCE.	1
DB 511-44	Wiring harness, front. LUXE.	1
DB 511-44a	Wiring harness, front (fitting front heating assembly). CONFORT.	1
DB 511-36	Wiring harness, rear. LUXE.	1
DB511-36a	Wiring harness, rear. CONFORT.	1
DF 511-36	Wiring harness, rear. FAMILY TYPE LUXE.	1
DF 511-36a	Wiring harness, rear. FAMILY TYPE CONFORT.	1
DS 511-22	Wiring harness, dynamo to regulator. Since December 1963.	1
DS 511-25	Wiring harness, headlight, horn and front direction indicator, left side.	1
DS 511-25a	Wiring harness, headlight and front indicator, right-hand side.	1
DS 511-63a	Cable, earth, (headlight and front direction indicator).	2
DM 511-107	Wiring harness for front heating assembly. CONFORT.	1

NUMBER	DESCRIPTION	No. OFF
	CABLES BY THE METRE RVI **Since September 1964**	
3.732	Cable, 20/10, single core.	As nec.
3.733	Cable, 12/10, single core.	As nec.
921.552	Cable, 40 mm^2, for battery.	As nec.
	BATTERY CABLE **Since September 1964**	
DM 511-8e	Cable for negative battery terminal to earth on water pump, 480 mm long.	1
DS 524-01a	Starter solenoid "Gelbon", 12 volts with positive cable (R. VI).	1

NUMBER	DESCRIPTION	No. OFF
	CABLE HARNESS **LEFT-HAND STEERING** **Since September 1964**	
DB 511-35	Wiring harness, front, (with front heater group). CONFORT.	1
DB 511-35a	Harness, front. GERMANY.	1
DB 511-44z	Harness, front, (without front heater group).	1
DB 511-36d	Wiring harness, rear. BREAK.	1

NUMBER	DESCRIPTION	No. OFF
DF 511-36d	Wiring harness, rear. FAMILY TYPE.	1
DS 511-22	Wiring harness for dynamo and regulators.	1
DS 511-25	Wiring harness for headlamps, horn and front direction indicator, left-hand.	1
DS 511-25a	Wiring harness for headlamp and front indicator, right-hand.	1
DS 511-25b	Wiring harness for headlamp, horns and front direction indicator, left-hand. U. S. A.	1
DS 511-25c	Wiring harness for headlamp, and front direction indicator, right-hand. U. S. A.	1
DS 511-63a	Wiring harness, earth, headlight and front indicator.	2
DF 511-19	Wiring from coil to contact breaker, 450 mm long.	1

NUMBER	DESCRIPTION	No. OFF
	ELECTRICAL EQUIPMENT	
A 512-5b	Bush, rubber, 3.5 x 6.5 x 20 for 4 mm diameter socket (R. VI).	As nec.
D 511-97	Bush, split, rubber, 4 x 16 x 20, for passage of front wiring through dashboard, R.H.	1
D 511-98	Bush, split, rubber, 12.5 x 50 x 20, for passage of front wiring through dashboard, L.H.	1
DS 511-95	Bush, rubber, 3 x 19 x 45, for passage of wiring for rear indicator light in body.	2
722.458	Junction box, 1 terminal (R. III).	1
722.593	Clip, AXO, negative, for battery, with screw (R. VI).	1
614.541	Terminal eyelet, 4 mm diameter, for wiring (R. VI).	As nec.
614.542	Terminal eyelet, 5 mm diameter, for wiring (R. VI).	As nec.
614.543	Terminal eyelet, 6 mm diameter, for wiring (R. VI).	As nec.
614.544	Terminal eyelet, 8 mm diameter, for wiring (R. VI).	As nec.
711.472	Terminal eyelet, 8.5 mm diameter, for battery cable (R. III).	4
710.022	Nut, special, 5 x 75, for terminal on junction box (R. VI).	1
A 512-3b	Socket, 4 mm diameter, for wiring (R. VI).	As nec.

NUMBER	DESCRIPTION	No. OFF
A 512-4a	Plug, 4 mm diameter for wiring (R. VI).	As nec.
DM 511-59	Grommet for wiring in rear luggage boot. Until October 1961.	1
DM 511-45	Protector, with clip, for wiring in rear luggage boot. Since October 1961.	1
722.429	Washer, for battery terminal (R. III).	2
D 511-82	*Tube for passage of rear wiring through gusset plate of centre pillar, 60 mm long (R. VI). Until February 1957. No longer supplied.*	1
DM 512-98	Tube, rubber, 15 x 25 x 480, protecting rear wiring on front pillar.	1
	12 VOLT FUSES Until September 1960	
DM 523-4	Fuse, 30 amp (R. VI).	2
DS 523-99	Base, rubber, between fuse holders (R. VI).	1
DM 523-6b	Holder for fuse (R. VI).	1
	FITTING 4 FUSES Since September 1960	
DM 523-4	Fuse, 30 amp (R. VI).	4
DM 523-99	Base, rubber, 80 x 60 x 2 for fuse holder (R. VI).	1
DM 523-6	Fuse holder, 80 x 68 x 28 (R. VI).	1
	FITTING 8 FUSES November 1962 - September 1964	
DM 523-4	Fuse 30 amps (R. VI).	8

NUMBER	DESCRIPTION	No. OFF
DM 523-99a	Base, rubber, 98 x 80 x 2, for holder of 6 fuses (R. VI).	1
DS 523-99	Base, rubber, 80 x 38 x 2, for holder of 2 fuses (R. VI).	1
DM 523-6a	Holder, 98 x 80 x 28, for 6 fuses (R. VI).	1
DM 523-6b	Holder, 80 x 38 x 28, for 2 fuses (R. VI).	1
	FITTING 8 FUSES GERMANY-ITALY Since September 1964	
DM 523-4	Fuse, 30 amps (R. VI).	8
DM 523-99a	Base, rubber, 98 x 80 x 2, for holder of 6 fuses (R. VI).	1
DS 523-99	Base, rubber, 80 x 38 x 2, for holder of 2 fuses (R. VI).	1
DS 523-6	Holder, 98 x 80 x 28 for 6 fuses (R. VI).	1
DM 523-6b	Holder, 80 x 38 x 28 for 2 fuses (R. VI).	1
	HORNS	
DM 571-3a	Horn, for town use, 12 volts, "Ferson" (R. VI).	1
DM 571-4	Horn, for country use, 12 volts, "Ferson" (R. VI).	1
DM 571-98	Support plate for country use horn.	2
2.491-S	Nut, hex., 7 x 100 for screws locking support plates (R. III).	1
DM 571-99	Bracket for horn. Until September 1962.	1
DS 571-97	Bracket for town use horn. Since September 1962.	1
DS 571-99	Bracket for country use horn. Since September 1962.	1
484-S	Screw, hex. head, 7 x 17.5, for securing support plates and bracket (R. III).	3

NUMBER	DESCRIPTION	No. OFF
	SUN VISOR	
DS 554-83	*Hinge pin, not threaded. Until November 1963. Replaced by DS 554-83b.*	2
DS 554-83b	Hinge pin, not threaded. Since November 1963.	2
D 554-90	Plug, rubber, (grey) (R. VI).	2
DM 554-1	Sun visor (grey) without mirror: - L.H. side. L.H. steering. - R.H. side. R.H. steering: Until November 1963.	 1 1
D 554-1	Sun visor (grey) without mirror: - L.H. side. L.H. steering. - R.H. side. R.H. steering. Since November 1963.	 1
DM 554-1a	*Sun visor (grey) with mirror, R.H. side. L.H. steering. Until November 1963. Replaced by DS 554-1a.*	1
DS 554-1a	Sun visor (grey) with mirror, R.H. side. L.H. steering. Since November 1963.	1
DM 554-1b	*Sun visor (grey) with mirror, L.H. side. R.H. steering. Until November 1963. Replaced by DS 554-1e.*	1
DS 554-1e	Sun visor (grey) with mirror, L.H. side. R.H. steering. Since November 1963.	1

NUMBER	DESCRIPTION	No. OFF
2.494-S	Nut, hex., castellated, 7 diameter x 100 pitch, for tightening hinge pin on bracket (R. III).	2
615.713	Nuts, self-locking, for 4.85 mm screws for securing sun visor (R. VI).	6
D 554-96	Friction sleeve on hinge pin (R. VI).	2
D 554-91	Friction bearing, 18 mm long on hinge pin (R. VI).	4
DM 554-01	*Sun visor, L.H. complete (grey), L.H. steering. Until November 1963. Replaced by DS 554-01h.*	1
DS 554-01h	Sun visor, L.H. complete (grey), L.H. steering. Since November 1963.	1
DM 554-01a	*Sun visor, R.H. complete (grey), R.H. steering. Until November 1963. Replaced by DS 554-01s.*	1
DS 554-01s	Sun visor, R.H. complete (grey), R.H. steering. Since November 1963.	1
DM 554-01c	*Sun visor, R.H. complete with mirror (grey). L.H. steering. Until November 1963. Replaced by DS 554-01j.*	1
DS 554-01j	Sun visor, R.H. complete with mirror (grey). L.H. steering. Since November 1963.	1
DM 554-01d	*Sun visor, L.H. complete with mirror (grey). R.H. steering. Until November 1963. Replaced by DS 554-01r.*	1

NUMBER	DESCRIPTION	No. OFF
DS 554-01r	Sun visor complete with mirror (grey). L.H. side. R.H. steering. Since November 1963.	1
619.037	Washer, 7.5 x 21 x 0.5, for hinge pin friction in bracket (R. III).	4
619.056	Washer, 7.5 x 21 x 0.8, for hinge pin in bracket (R. VI).	2
DS 554-97	Bracket only, L.H.	1
DS 554-97a	Bracket only, R.H.	1
2.746-S	Screw, round head, Parker, 4.85 x 16, for securing sun visor (R. VI).	6
	REAR VIEW MIRROR	
DM 551-92	Stop, rubber, on support for rear view mirror (R. VI). U.S.A. Since September 1964.	1
DM 551-80	Collar, 7.25 x 16 x 4, for rear view mirror support, U.S.A. Until September 1964.	1
DM 551-3a	Rear view mirror, complete (R. VI). Except U.S.A. Until September 1962.	1
DM 551-3c	Rear view mirror, complete (R. VI)., Except U.S.A. September 1962 - September 1964.	1
DM 551-3e	Rear view mirror complete (R. VI). Except U.S.A. Since September 1964.	1
DM 551-3h	Rear view mirror complete (R. VI). U.S.A. Since September 1964.	1
DM 551-82	Support for rear view mirror, U.S.A. Until September 1964.	1
2.659	*Screw, hex. head, 5 x 13, for securing rear view mirror (R. III). U.S.A. Replaced by 283-S.*	1

NUMBER	DESCRIPTION	No. OFF
	RADIO SET **Since January 1963**	
DW 653-01	Aerial (R. VI).	1
DM 653-82	Pad, rubber, 45 x 25 x 12, retaining radio set (R. VI).	1
DW 653-69	Aerial casing (R. VI).	1
DW 653-1	Spark capacitor "ARA" on ignition coil and dynamo regulator (R. VI).	2
2.269-S	Nut, hex., 5 x 75, for screws securing (R. III):	
	- loudspeaker on bracket.	4
	- clips for loudspeaker bracket.	6
2.320-S	Nut, hex., 5 x 75, for securing capacitor on coil (R. III).	1
DW 653-47	Surround for loudspeaker grille.	1
DW 653-55	Grille for protecting loudspeaker (R. VI).	1

NUMBER	DESCRIPTION	No. OFF
DW 653-10	Loudspeaker "AUDAX" (R. VI).	1
DW 653-56	Gasket (cardboard), anti-rattle, between grille and loudspeaker surround (R. VI).	1
DM 653-51	Clip supporting radio set (R. VI). Until September 1963.	1
DF 653-81	Clip, upper, for securing loudspeaker bracket to body, 155 mm long (R. VI).	2
DF 653-81a	Clip, elbowed, lower, for securing loudspeaker bracket to body (R. VI).	1
DM 653-0a	Radio set only (R. VI). Until September 1964.	1
DW 653-0a	Radio set only (R. VI). Since September 1964.	1
DF 653-05	*Radio set assembly including aerial, loudspeaker and mounting (R. VI). Replaced by DM 653-05; order in addition: 1-DF 653-11, 2-DF 653-81, 1-DF 653-81a.*	1
DW 653-05	Radio set assembly, comprising aerial, loudspeaker and mounting (R. VI). Since September 1964.	1
DW 653-57	Protector (cotton) for loudspeaker.	1
DW 653-59	*Protector (profiled) smooth, for co-axial cable descent on front pillar (R. VI). Until January 1963. Replaced by DW 653-59a.*	1
DW 653-59a	Protector (profiled), splined, for co-axial cable descent on front pillar (R. VI). Since January 1963.	1
DF 653-11	Bracket, for loudspeaker, under dashboard, right-hand side.	1
2.262-S	Washer, 4.25 x 10 for screws securing radio set (R. III).	6

NUMBER	DESCRIPTION	No. OFF
2.284-S	Washer, shakeproof, 4.2 x 8, for screws securing (R. VI):	
	- clips on loudspeaker bracket.	6
	- earth lead.	1
	- loudspeaker on bracket.	4
3.232-S	Washer, cupped, 5 mm for screws securing clips on loudspeaker bracket (R. III).	6
3.234-S	Washer, cupped, 6 mm for screws securing loudspeaker on body (R. VI).	3
89-S	Screw, slotted head, 4 x 25, for securing the clips on the loudspeaker bracket (R. III).	6
2.506-S	Screw, raised countersunk head, 4.85 x 25.4, for securing loudspeaker on body (R. VI).	3
2.756-S	Screw, round head, 3.5 x 9.5, for securing (R. VI):	
	- the earth lead on radio set.	1
	- the radio set under the dashboard. Until September 1964.	1
2.263-S	Screw, round head, 3.5 x 15.5, for securing the clip on radio set bracket. Until September 1964.	2
2.281-S	Screw, raised countersunk head, for securing the loudspeaker (R. VI).	4

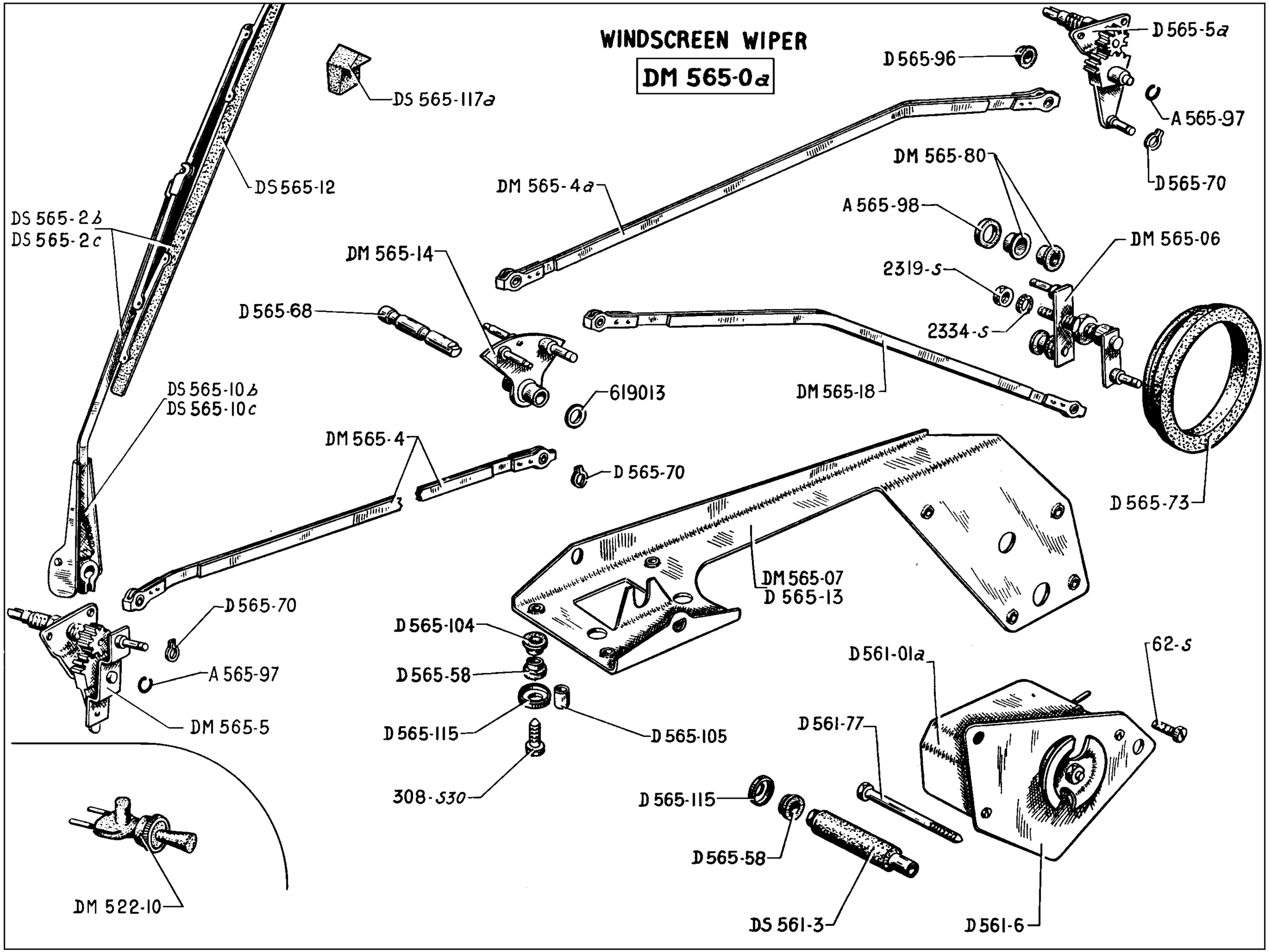
WINDSCREEN WIPER
DM 565-0a
DS 565-117a
D 565-5a
D 565-96
A 565-97
D 565-70
DM 565-80
DS 565-12
DM 565-4a
A 565-98
DS 565-2b
DS 565-2c
DM 565-06
DM 565-14
2319-s
D 565-68
2334-s
DS 565-10b
DS 565-10c
619013
DM 565-18
DM 565-4
D 565-70
D 565-73
DM 565-07
D 565-13
D 565-70
D 565-104
A 565-97
D 565-58
D 561-01a
62-s
DM 565-5
D 565-115
D 565-105
D 561-77
308-S30
D 565-115
D 565-58
DM 522-10
DS 561-3
D 561-6

NUMBER	DESCRIPTION	No. OFF
	Until May 1960	
A 565-97	Circlip on wiper arm segment (R. VI).	2
A 565-98	Washer, 4.2 x 7 x 0.5, on flexible sleeve (R. VI).	2
DM 522-10	Switch on instrument board (R. VI).	1
D 561-01a	Motor, 12 volts (R. VI).	1
DS 561-3	Tube, rubber, 8 x 20 x 47.5, with distance piece for screw securing motor (R. VI).	3
D 561-6	Mounting plate for motor (R. VI).	1
D 561-77	Screw, hex. head, 6 diameter x 62 mm long, for securing motor.	3
DM 565-0a	*Windscreen wiper complete (R. VI). Replaced by D 561-01a; order in addition: 1-DM 565-07.*	1
DM 565-06	Spindle arm with bush for operating linkage (R. VI).	1
DM 565-07	Operating linkage with wiper arms (without motor)(R. VI).	1
DS 565-2b	Wiper arm, complete, L.H. (R. VI).	1
DS 565-2c	Wiper arm, complete, R.H. (R. VI).	1

NUMBER	DESCRIPTION	No. OFF
DM 565-4	Linkage controlling wiper arm, 526.5 between centres (R. VI).	1
DM 565-4a	Linkage controlling wiper arm, R.H. 342 mm between centres (R. VI).	1
D 565-5a	Bracket for wiper arm spindle, R.H. (R. VI).	1
DM 565-5	Bracket for wiper arm spindle, L.H. (R. VI).	1
DS 565-10b	Wiper arm, L.H. (R. VI).	1
DS 565-10c	Wiper arm, R.H. (R. VI).	1
DS 565-12	Wiper blade (R. VI).	2
D 565-13	Bracket for windscreen wiper mechanism (R. VI).	1
DM 565-14	Triangular end piece (R. VI).	1
DM 565-18	Control link (R. VI).	1
D 565-58	Bush, rubber, with shoulder, 12 x 20 x 17 x 6, for screws securing motor to scuttle (R. VI).	8
D 565-68	Spindle for triangular plate, 68 mm long (R. VI).	1
D 565-70	*Clip for holding flexible sleeves on double crank (R. VI). Replaced by AZ 565-70.*	2
D 565-73	Sealing washer, rubber, 50 x 70 x 8, for bracket.	1

NUMBER	DESCRIPTION	No. OFF
DM 565-80	Bush, flexible, with shoulder, for control spindle on linkage (R. VI).	2
D 565-96	Sealing cap on wiper arm spindle (R. VI).	2
D 565-104	Bush, rubber, 8 x 20 x 8, on bracket.	8
D 565-105	Distance tube, 7 x 8 x 12.5, for bush on bracket (R. VI).	5
D 565-115	Cup, washer, for rubber bush on plate and motor bracket (R. VI).	5
DS 565-117a	Stop for wiper arm.	2
62-S	Screw, round head, 4 diameter x 7.5 mm long, for securing (R. III):	
	- crank arm.	1
	- motor on plate.	2
308-S 30	Screw, hex. head, pointed, 6 diameter x 25 mm long, for securing bracket (R. VI).	5
2.319-S	Nut, hex., 5 x 75, for securing the double crank on intermediate shaft (R. III).	1
2.334-S	Washer, shakeproof, 5.2 x 9.4, for locking double crank on intermediate shaft (R. VI).	1
619.013	Washer for spindle on triangular plate (R. VI).	4

184 - WINDSCREEN WIPER SEV 12 VOLTS

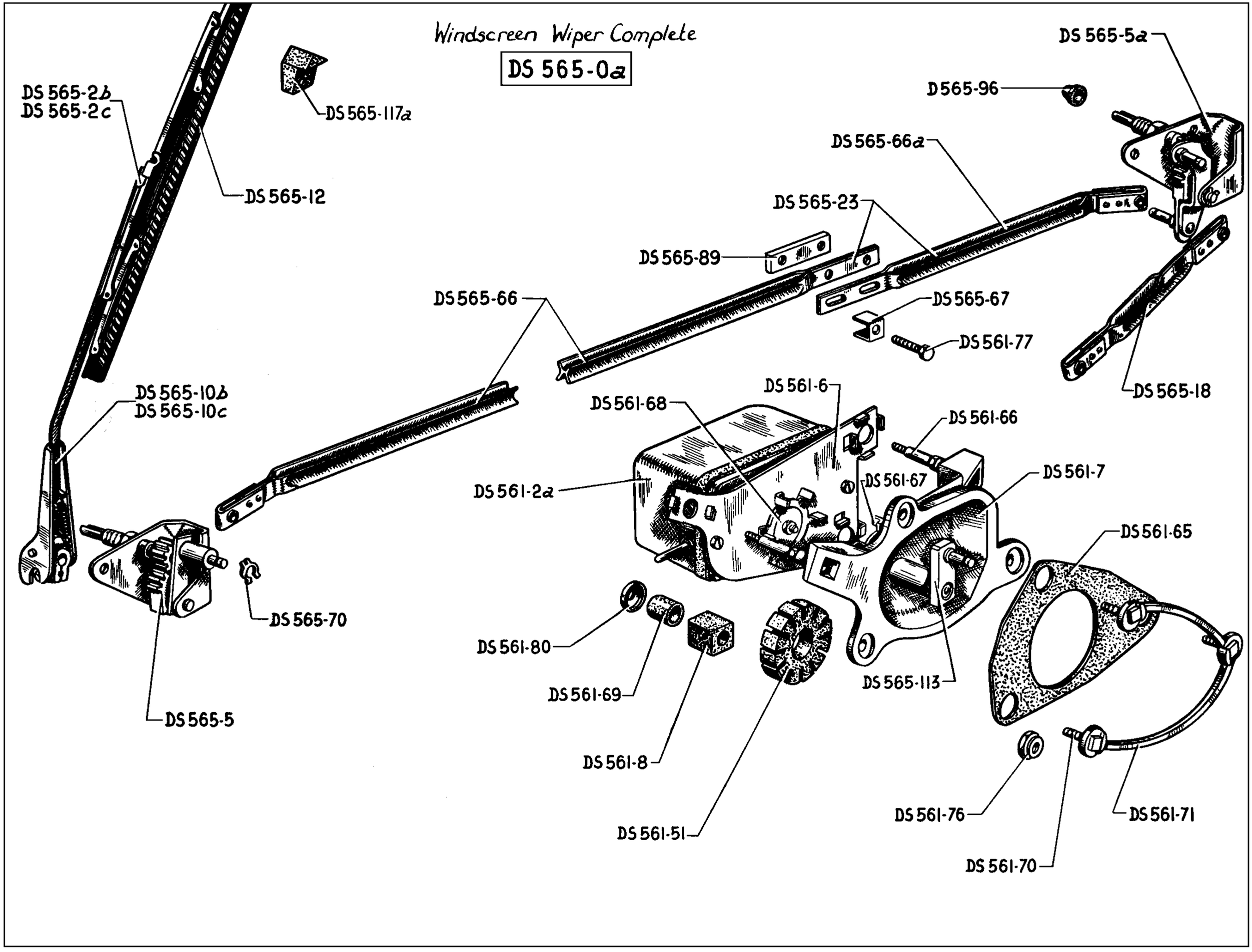

NUMBER	DESCRIPTION	No. OFF
	May 1960 — February 1961	
	EXPORT	
	Until September 1960	
DS 561-2a	Motor, 12 volts (R. VI).	1
DS 561-6	Mounting plate for motor (R. VI).	1
DS 561-7	Support bracket for motor (R. VI).	1
DS 561-8	Block, rubber, for securing motor (R. VI).	3
DS 561-51	Rubber drive member between motor and control (R. VI).	1
DS 561-65	Joint, rubber, between motor and body (R. VI).	1
DS 561-66	Stud for securing motor (R. VI).	3
DS 561-67	Drive plate with spindle, crank side (R. VI).	1
DS 561-68	Drive plate, motor side (R. VI).	1

NUMBER	DESCRIPTION	No. OFF
DS 561-69	Washer, rubber, for securing motor (R. VI).	3
DS 561-70	*Screw, square head, 5 x 20 for securing motor support bracket (R. VI). No longer supplied.*	3
DS 561-71	*Screw carrier for securing motor support bracket (R. VI). No longer supplied.*	1
DS 561-76	Nut, shouldered, for the screws securing the motor support bracket (R. VI).	3
DS 561-77	Screw, hex. head, for the linkage assembly (R. VI).	2
DS 561-80	Washer, cupped, for the screws securing the motor bracket (R. VI).	3
DS 565-0a	Windscreen washer complete, 12 volts (R. VI).	1
DS 565-2b	Wiper arm complete, L.H. (R. VI).	1
DS 565-2c	Wiper arm complete, R.H. (R. VI).	1
DS 565-5	Bracket for wiper arm spindle, L.H. (R. VI).	1
DS 565-5a	Bracket for wiper arm spindle, R.H. (R. VI).	1

NUMBER	DESCRIPTION	No. OFF
DS 565-10b	Wiper arm (without blade), L.H. (R. VI).	1
DS 565-10c	Wiper arm (without blade), R.H. (R. VI).	1
DS 565-12	Wiper blade (R. VI).	2
DS 565-18	Control link (R. VI).	1
DS 565-23	Linkage assembly (R. VI).	1
DS 565-66	Linkage, L.H. (R. VI).	1
DS 565-66a	Linkage, R.H. (R. VI).	1
DS 565-67	Clip for screws securing linkage (R. VI).	2
DS 565-70	Clip for securing the linkage on spindle (R. VI).	4
DS 565-89	*Counter plate for linkage assembly, 2 holes drilled 5 mm (R. VI). No longer supplied.*	2
D 565-96	Sealing cap for wiper arm spindle (R. VI).	2
DS 565-113	Control crank with spindle (R. VI).	1
DS 565-117a	Stop piece for wiper arm.	2

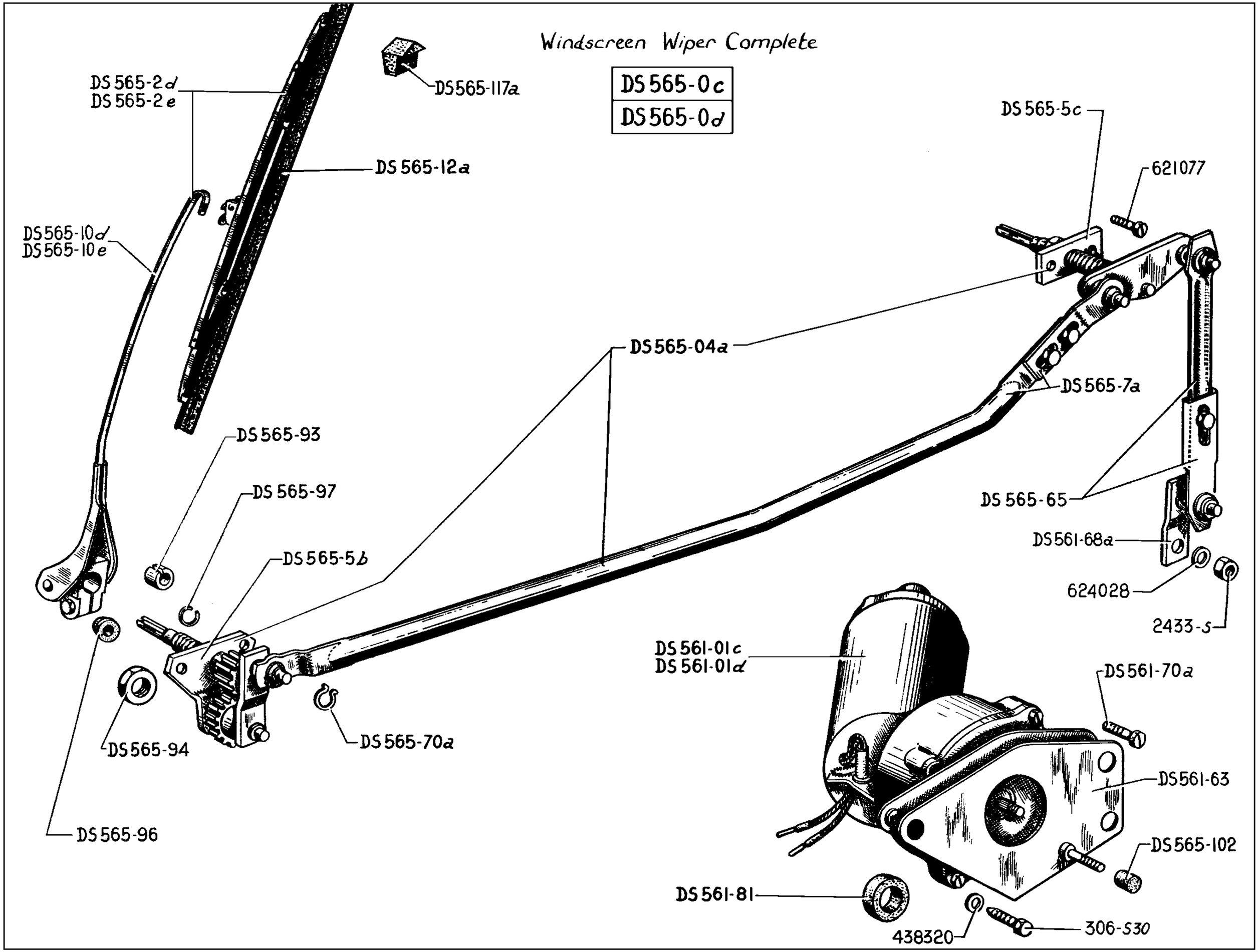
Windscreen Wiper Complete
DS 565-0c
DS 565-0d
DS565-117a
DS 565-2d
DS 565-2e
DS 565-12a
DS565-10d
DS565-10e
DS 565-5c
621077
DS565-04a
DS 565-7a
DS 565-93
DS 565-97
DS 565-5b
DS 565-65
DS561-68a
624028
2433-s
DS 561-01c
DS 561-01d
DS 561-70a
DS 565-94
DS 565-70a
DS561-63
DS 565-96
DS565-102
DS 561-81
438320
306-S30

NUMBER	DESCRIPTION	No. OFF
	EXPORT	
	September 1960 – September 1964	
	All Types. February 1961– September 1964	
DS 561-01c	Motor, 12 volts (R. VI). Until August 1961.	1
DS 561-01d	Motor, 12 volts, automatic parking (R. VI). Since August 1961.	1
DS 561-63	Backplate for motor, with securing screw (R. VI).	1
DS 561-68a	Crank, control (R. VI).	1
DS 561-70a	Screw, cheesehead, for securing motor on support bracket (R. VI).	3
DS 561-81	Washer, rubber, sealing between motor and support bracket (R. VI).	1
DS 565-0c	Windscreen wiper complete, 12 volts (R. VI). Until August 1961.	1
DS 565-0d	*Windscreen wiper complete, 12 volts (motor with automatic parking) (R. VI). Since August 1961. No longer supplied.*	1

NUMBER	DESCRIPTION	No. OFF
DS 565-04a	Linkage complete, without arms (R.VI).	1
DS 565-2d	*Wiper arm complete, L.H. (R. VI). Replaced by DS 565-10d; order in addition: 1-DS 565-12a.*	1
DS 565-2e	*Wiper arm complete, R.H. (R. VI). Replaced by DS 565-10e; order in addition 1-DS 565-12a.*	1
DS 565-5b	Support for wiper arm spindle, L.H. (R. VI).	1
DS 565-5c	Support for wiper arm spindle, R.H. (R. VI).	1
DS 565-7a	Connecting rod assembly, with sleeve, 900 mm long (R. VI).	1
DS 565-10d	Wiper arm, L.H. without wiper (R. VI).	1
DS 565-10e	Wiper arm, R.H. without wiper (R. VI).	1
DS 565-12a	Blade (R. VI).	2
DS 565-65	*Operating rod, with sleeve (R. VI). Replaced by DW 565-65.*	1
DW 565-65	Operating rod, with sleeve (R. VI).	1
DS 565-70a	Circlips retaining the rods on the wiper spindle (R. VI).	5
DS 565-93	Split bush for securing the arms on the spindle (R. VI).	2

NUMBER	DESCRIPTION	No. OFF
DS 565-94	Nut, hex., for securing the arm spindle on the body (R. VI).	2
DS 565-96	Sealing cap, rubber, for the wiper arm spindle (R. VI).	2
DS 565-97	Circlip on wiper arm spindle (R. VI).	2
DS 565-102	Rubber stop for glove box, on screw for backplate (R. VI).	1
DS 565-117a	Stop for wiper arm.	2
306-S 30	Screw, hex. head, 6 x 20, for securing the motor on body (R. III).	3
2.433-S	Nut, hex., 6 x 100, for securing the motor on the crank arm (R. III).	1
438.320	Washer, 6.5 x 20 x 1.8, for the screws securing the motor on the body (R. II).	3
621.077	Screw, hex. head, 4 x 10, for securing the support for the wiper arm spindle on the body (R. III).	4
624.028	Spring washer, 6.4 x 12 x 0.5, for nut on assembly of motor and crank arm (R. III).	1

The numbers underlined indicate new parts which do not appear on the illustration.

NUMBER	DESCRIPTION	No. OFF
	Since September 1964	
DS 522-10	Switch (R. VI).	1
DS 561-01e	Motor, 12 volts Bosch (R. VI).	1
DS 561-6b	Mounting plate for Bosch motor (R. VI).	1
DS 561-63a	Counterplate for fixing Bosch motor (R. VI).	1
DS 561-68b	Drive plate (R. VI).	1
DS 561-81a	Sealing washer between motor and plate (R. VI).	1
DS 565-04c	Mechanism without motor (R. VI).	1
DS 565-2f	Wiper arm complete, Bosch, left-hand (R. VI). L.H. steering.	1
DS 565-2g	Wiper arm complete, Bosch, right-hand (R. VI). L. H. steering.	1
DS 565-2h	Wiper arm complete, Bosch, left-hand (R. VI). R. H. steering.	1
DS 565-2i	Wiper arm complete, Bosch, right-hand (R. VI). R. H. steering.	1
DS 565-4	Control link (R. VI).	1
DS 565-7b	Connecting link (R. VI).	1
DS 565-10f	Wiper arm, right and left, without blade, Bosch (R. VI). L. H. steering.	2
DS 565-10g	Wiper arm, right and left, without blade, Bosch (R. VI). R. H. steering.	2
DS 565-12a	Wiper blade, Bosch, right-hand (R. VI).	1
DS 565-12b	Wiper blade, Bosch, left-hand (R. VI).	1
DS 565-19	Support for wiper arm spindle, left-hand (R. VI).	1
DS 565-20	Support for wiper arm spindle, right-hand (R. VI).	1
DS 565-49	Distance piece for wiper arm spindles, inside diameter 16. 5, external 24 mm (R. VI).	2
DS 565-94a	Nut, hex., 16 x 100, for securing wiper arm spindles (R. VI).	2
DS 565-96a	Joint, rubber, sealing under distance piece on wiper arm spindles (R. VI).	2
295-S 30	Screw, hex. head, 5 x 16, pointed, for securing support for spindle on body (R. III).	6
306-S 30	Screw, hex. head, 6 x 20, for securing motor on body (R. III).	2

NUMBER	DESCRIPTION	No. OFF
	Since September 1964	
DS 522-10	Switch (R. VI).	1
DS 561-01e	Motor, 12 volts, Bosch (R. VI).	1
DS 561-68b	Drive plate (R. VI).	1
DS 565-04c	Linkage without motor or wiper arm (R. VI).	1
DS 565-2f	Wiper arm complete, Bosch, left-hand (R. VI). L.H. steering.	1
DS 565-2g	Wiper arm complete, Bosch, right-hand (R. VI). L.H. steering.	1
DS 565-2h	Wiper arm complete, Bosch, left-hand (R. VI). R.H. steering.	1
DS 565-2i	Wiper arm complete, Bosch, right-hand (R. VI). R.H. steering.	1
DS 565-4	Control link (R. VI).	1
DS 565-7b	Connecting link (R. VI).	1
DS 565-10f	Wiper arm, right and left, without blade, Bosch (R. VI). L.H. steering.	2
DS 565-10g	Wiper arm, right and left, without blade, Bosch (R. VI). R.H. steering.	2
DS 565-12a	Wiper blade, Bosch, right-hand (R. VI).	1
DS 565-12b	Wiper blade, Bosch, left-hand (R. VI).	1
DS 565-19	Support for wiper arm spindle, left-hand (R. VI).	1
DS 565-20	Support for wiper arm spindle, right-hand (R. VI).	1
DS 565-49	Distance piece for wiper arm spindles, inside diameter 16.5, external 24 mm (R. VI).	2
DS 565-94a	Nut, hex., 16 x 100, for securing wiper arm spindles (R. VI).	2
DS 565-96a	Joint, rubber, sealing under distance piece on wiper arm spindles (R. VI).	2
295-S 30	Screw, hex. head, 5 x 16, pointed, for securing support for spindle on body (R. III).	6
306-S 30	Screw, hex. head, 6 x 20, for securing motor on body (R. III).	2

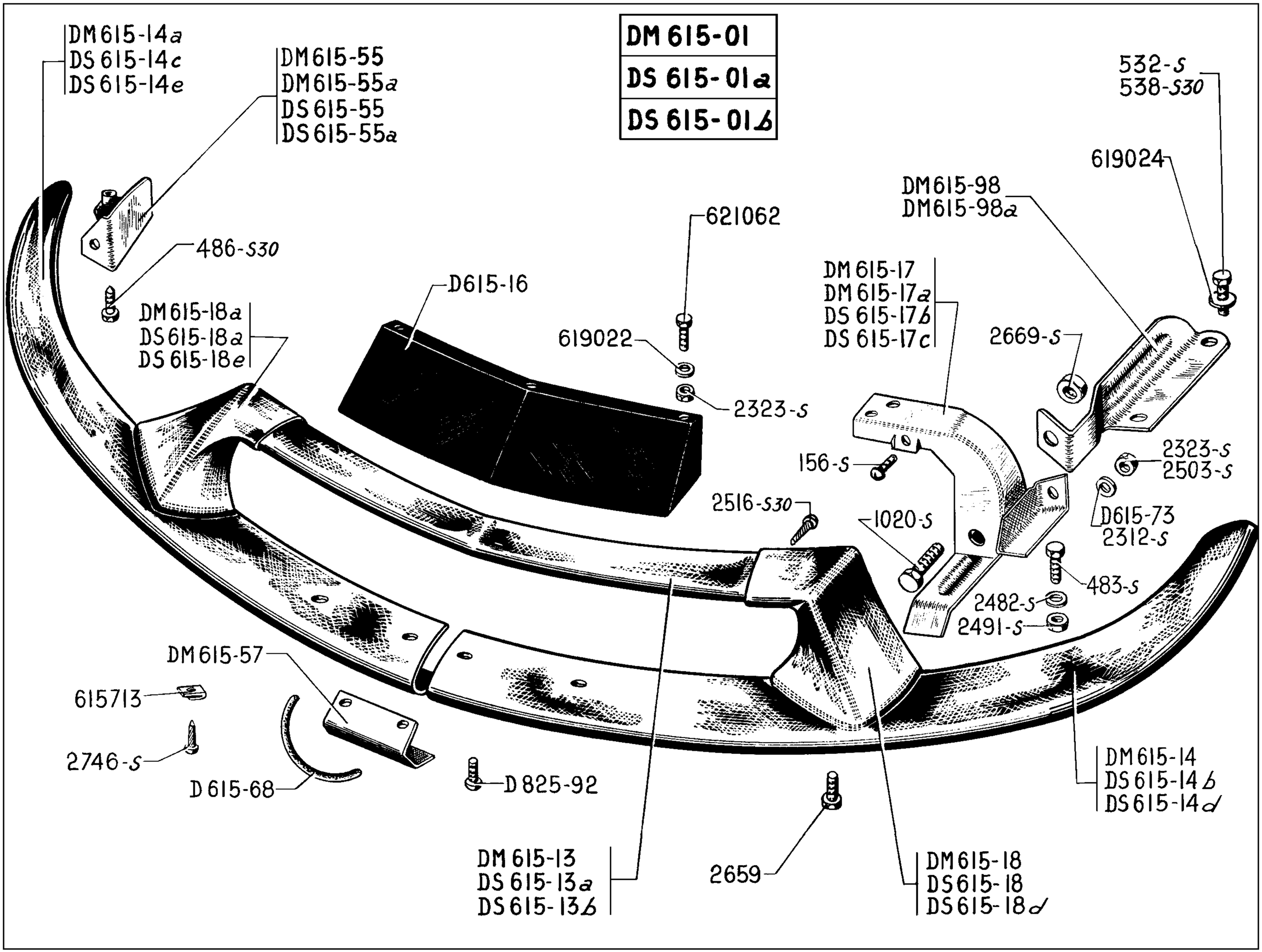
DM 615-01
DS 615-01a
DS 615-01b
DM615-14a
DS 615-14c
DS 615-14e
DM615-55
DM615-55a
DS 615-55
DS 615-55a
532-S
538-S30
619024
DM615-98
DM615-98a
621062
486-S30
D615-16
DM 615-17
DM 615-17a
DS 615-17b
DS 615-17c
DM615-18a
DS615-18a
DS 615-18e
619022
2669-S
2323-S
156-S
2323-S
2503-S
2516-S30
1020-S
D615-73
2312-S
483-S
2482-S
2491-S
DM615-57
615713
2746-S
D 615-68
D 825-92
DM615-14
DS 615-14b
DS 615-14d
DM 615-13
DS 615-13a
DS 615-13b
2659
DM 615-18
DS615-18
DS615-18d

NUMBER	DESCRIPTION	No. OFF
	Except U.S.A. Until September 1962	
	For U.S.A. Until November 1961	
DM 615-01	Bumper, front, complete. Except U. S. A.	1
DS 615-01a	*Bumper, front, complete U.S.A. Replaced by DS 615-01b.*	1
DM 615-13	Bumper bar, upper, without end pieces. Except U. S. A.	1
DS 615-13a	*Bumper bar, front, upper, U.S.A. Replaced by DS 615-13b.*	1
DM 615-14	Half bumper bar, lower, L.H. Except U. S. A.	1
DM 615-14a	Half bumper bar, lower, R.H. Except U. S. A.	1
DS 615-14b	*Half bumper bar, front, L.H. U.S.A. Replaced by DS 615-14d.*	1
DS 615-14c	*Half bumper bar, front, R.H. U.S.A. Replaced by DS 615-14e.*	1
D 615-16	Number plate.	1
DM 615-17	Bracket, L.H. without bush for rubber stop.	1
DM 615-17a	Bracket, R.H. without bush for rubber stop.	1
DM 615-18	End piece, L.H. Except U. S. A.	1

NUMBER	DESCRIPTION	No. OFF
DM 615-18a	End piece, R.H. Except U. S. A.	1
DS 615-18	*End piece, L.H. U.S.A. Replaced by DM 615-18.*	1
DS 615-18a	*End piece, R.H. U.S.A. Replaced by DM 615-18a.*	1
DM 615-55	*Support plate for securing extreme left of bumpers. Replaced by DS 615-55.*	1
DM 615-55a	*Support plate for securing extreme right of bumpers. Replaced by DS 615-55a.*	1
DM 615-57	Connecting piece for assembling lower half bumpers.	1
D 615-68	Packing piece, rubber, for lower half bumpers.	1
D 615-73	Washer, rubber, 5 x 14 x 2, for end brackets of upper part of bumpers.	4
DM 615-98	Bracket, L.H. without spindle on body.	1
DM 615-98a	Bracket, R.H. without spindle on body.	1
D 825-92	Screw, round head, 7 diameter x 20 mm long, for assembling lower half bumpers.	2
483-S	Screw, hex. head, 7 diameter x 15 mm long, for securing lower bumper bar on adjustable support (R. III).	2
486-S 30	Screw, hex. head, pointed, 7 diameter x 22.5 mm long, for securing support plate for extreme left and right (R. III).	4

NUMBER	DESCRIPTION	No. OFF
532-S	Screw, hex. head, 9 diameter x 28 mm long, pointed, for securing bumper to body (R. III).	4
1.020-S	Screw, hex. head, 12 diameter x 22 mm long, for securing brackets on body to bumper brackets (R. III).	2
2.323-S	Nut, hex., 5 diameter x 75 pitch, for screws securing upper bumper bar and number plate (R. III).	3
2.482-S	Washer. 7.5 x 14, for nuts securing lower bumper bar on adjustable bracket (R. III).	2
2.491-S	Nut, hex., 7 diameter x 100 pitch, for screws securing lower bumper bar on adjustable bracket (R. III).	2
2.669-S	Nut, hex., 12 diameter x 175 pitch, for screws securing brackets on body to bumper brackets (R. III).	2
2.746-S	Screw, round head, Parker, (cruciform slot), 4.85 x 16 mm long, for securing distance piece on lower bumper bar (R. VI).	4
615.713	Nut, self-locking, for 4.85 diameter screw, securing distance piece on lower bumper bar (R. VI).	1
619.022	Washer. 5.2 x 14 x 1, for screws securing upper bumper bar and number plate (R. III).	3
621.062	Screw, hex. head, 5 diameter x 14 mm long, for securing upper bumper bar and number plate (R. III).	3

NUMBER	DESCRIPTION	No. OFF
	November 1961 — September 1962	
DS 615-01b	Bumper, front, complete.	1
DS 615-13b	Bumper bar, upper, without end piece.	1
DS 615-14d	Half bumper bar, lower, L.H.	1
DS 615-14e	Half bumper bar, lower. R.H.	1
D 615-16	Number plate.	1
DS 615-17b	Bracket, adjustable, L.H.	1
DS 615-17c	Bracket, adjustable, R.H.	1
DS 615-18d	End piece, L.H. (R. VI).	1
DS 615-18e	End piece, R.H. (R. VI).	1
DS 615-55	Bracket, steel, for securing extreme left of bumpers.	1
DS 615-55a	Bracket, steel, for securing extreme right of bumpers.	1
DM 615-57	Reinforcement for assembly of lower half bumpers.	1
D 615-68	Clip (semi-circular) rubber, for lower half bumpers.	1
DM 615-98	Bracket, L.H. without pin for body.	1

NUMBER	DESCRIPTION	No. OFF
DM 615-98a	Bracket, R.H. without pin for body.	1
156-S	Screw, slotted head, 5 x 17.5, for securing bumpers, upper, on adjustable bracket (R. III).	4
486-S 30	Screw, hex. head, pointed, 7 x 22.5, for assembling (R. III):	
	- half bumpers, lower.	2
	- half bumpers, lower, on adjustable bracket.	4
	- bracket for extreme left and right of bumpers.	4
538-S 30	Screw, hex. head, pointed, 9 x 22, for securing bumpers to body (R. III).	4
1.020-S	Screw, hex. head, 12 x 22, for securing brackets on body to brackets on bumpers (R. III).	2
2.312-S	Washer, flat, 5.5 x 9, for screws securing end piece (R. III).	4
2.323-S	Nut, hex., 5 x 75, for screws securing (R. III):	
	- end piece on bumpers, upper.	2
	- bumpers, upper, and number plate.	3
	- bumpers, upper, on adjustable bracket.	4
2.482-S	Washer, flat, 7.5 x 14, for nuts securing lower bumpers on adjustable bracket (R. III).	4

NUMBER	DESCRIPTION	No. OFF
2.503-S	Nut, hex., 7 x 100, for locking screws (R. III):	
	- on assembly of lower half bumpers.	2
	- securing lower half bumpers on adjustable bracket.	4
2.516-S 30	Screw, raised countersunk head, 5 x 16, (cruciform slot), for securing end piece on upper bumpers (R. VI).	2
2.669-S	Nut, hex., 12 x 175, for screws securing brackets on body to brackets on bumpers (R. III).	2
2.746-S	Screw, round head, Parker (cruciform slot) 4.85 x 16, for securing distance piece on lower bumpers (R. VI).	4
2.659	*Screw, hex. head, 5 x 13, for securing end piece (R. III). Replaced by 283-S.*	4
615.713	Nut, self locking, for 4.85 screw, for securing distance piece on lower bumpers (R. VI).	4
619.022	Washer, flat, 5.5 x 14 x 1, for securing (R. III):	
	- bumpers, upper, and number plate.	3
	- bumpers, upper, on adjustable bracket.	4
619.024	Washer, flat, 10 x 20, for securing bumpers on body (R. II).	4
621.062	Screw, hex. head, 5 x 14, for securing upper bumpers and number plate (R. III).	3

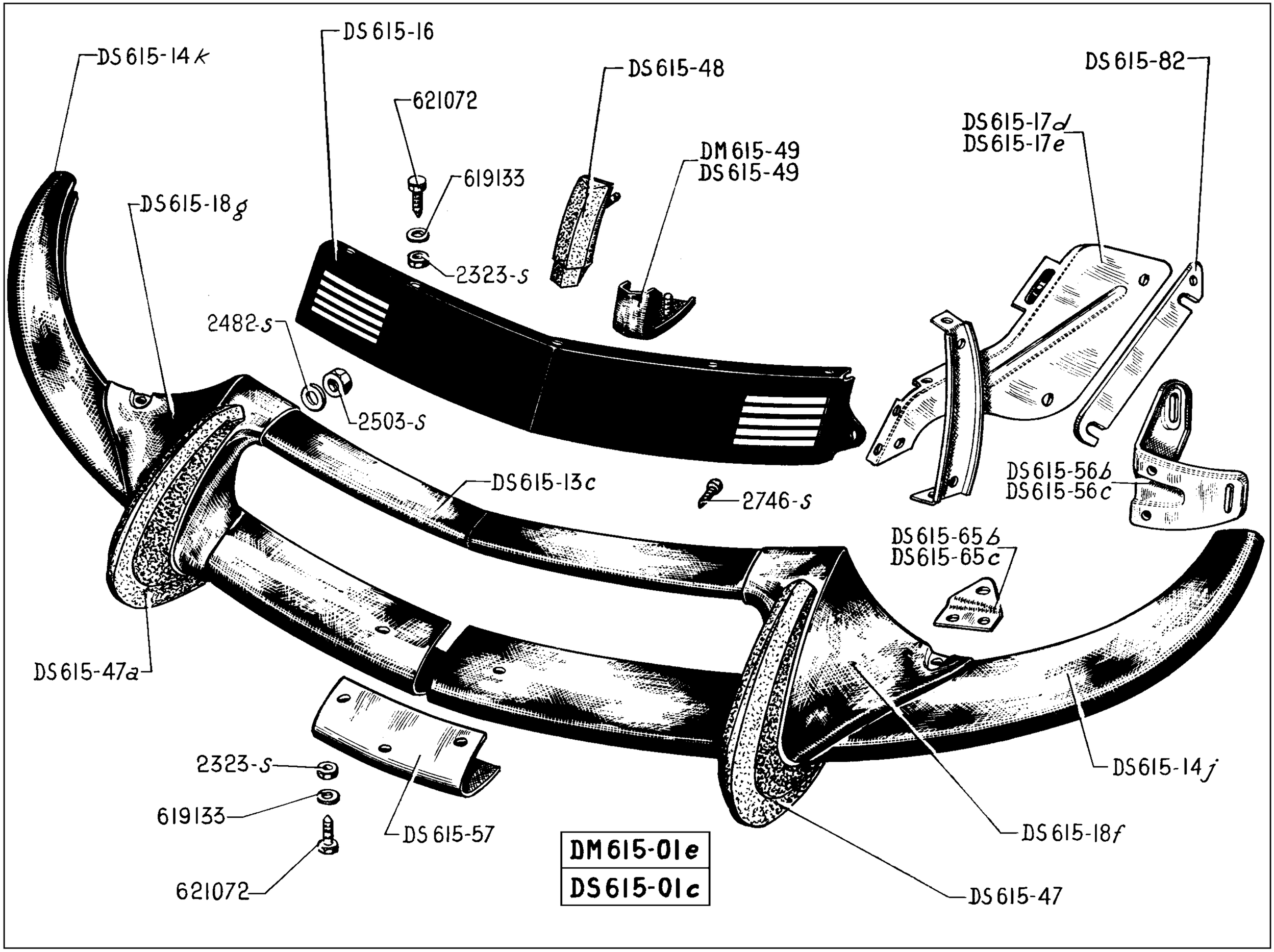
DS615-14k
DS615-16
621072
DS615-48
DS615-82
DS615-17d
DS615-17e
DM615-49
DS615-49
619133
DS615-18g
2323-s
2482-s
2503-s
DS615-13c
2746-s
DS615-56b
DS615-56c
DS615-65b
DS615-65c
DS615-47a
2323-s
619133
621072
DS615-57
DS615-14j
DS615-18f
DS615-47
DM615-01e
DS615-01c

NUMBER	DESCRIPTION	No. OFF
	ALL TYPES **Since September 1962**	
DM 615-01e	Bumper, front, complete. R.H. steering.	1
DS 615-01c	Bumper, front, complete. L.H. steering.	1
DS 615-13c	*Bumper bar, upper, without end piece. Replaced by DX 615-13.*	1
DS 615-14j	Half bumper bar, lower, L.H.	1
DS 615-14k	Half bumper bar, lower, R.H.	1
DS 615-16	Number plate.	1
DS 615-17d	Bracket, adjustable, L.H.	1
DS 615-17e	Bracket, adjustable, R.H.	1
DS 615-18f	End piece, L.H.	1
DS 615-18g	End piece, R.H.	1
DS 615-47	Buffer, rubber, L.H. (R. VI).	1

NUMBER	DESCRIPTION	No. OFF
DS615-47a	*Buffer, rubber, R.H. (R. VI). Replaced by DX 615-47a.*	1
DS 615-48	Buffer, rubber, central (R. VI). L.H. steering.	1
DM 615-49	Cover for joint of half bumpers, lower (R. VI). R.H. steering.	1
DS 615-49	Cover for joint of half bumpers, lower (R. VI). L.H. steering.	1
DS 615-56b	Bracket for securing extreme left of bumpers.	1
DS 615-56c	Bracket (steel) for securing extreme right of bumpers.	1
DS 615-57	Reinforcement for assembly of lower half bumpers.	1
DS 615-65b	Bracket for securing end piece on bumpers, L.H.	1
DS 615-65c	Bracket for securing end piece on bumpers, R.H.	1

NUMBER	DESCRIPTION	No. OFF
DS 615-82	Shim (aluminium), 4 mm thick, for lateral adjustment of bumpers.	2
2.323-S	Nut, hex., 5 x 75, for screws securing (R. III):	
	- cover for joint.	3
	- number plate.	6
2.482-S	Washer, flat, 7.5 x 14, for screws securing end piece (R. III).	6
2.503-S	Nut, hex., 7 x 100, for screws securing end piece (R. III).	6
2.746-S	Screw, Parker, 4.85 x 16, for securing number plate, lower part (R. VI).	4
619.133	Washer, flat, for screws for assembly and securing of bumpers (R. IV).	24
621.072	Screw, hex. head, 5 x 16, for securing (R. III):	
	- reinforcement piece on half bumpers.	1
	- bumpers, upper part.	4
	- number plate, upper part.	5
	- end pieces on bumpers.	2

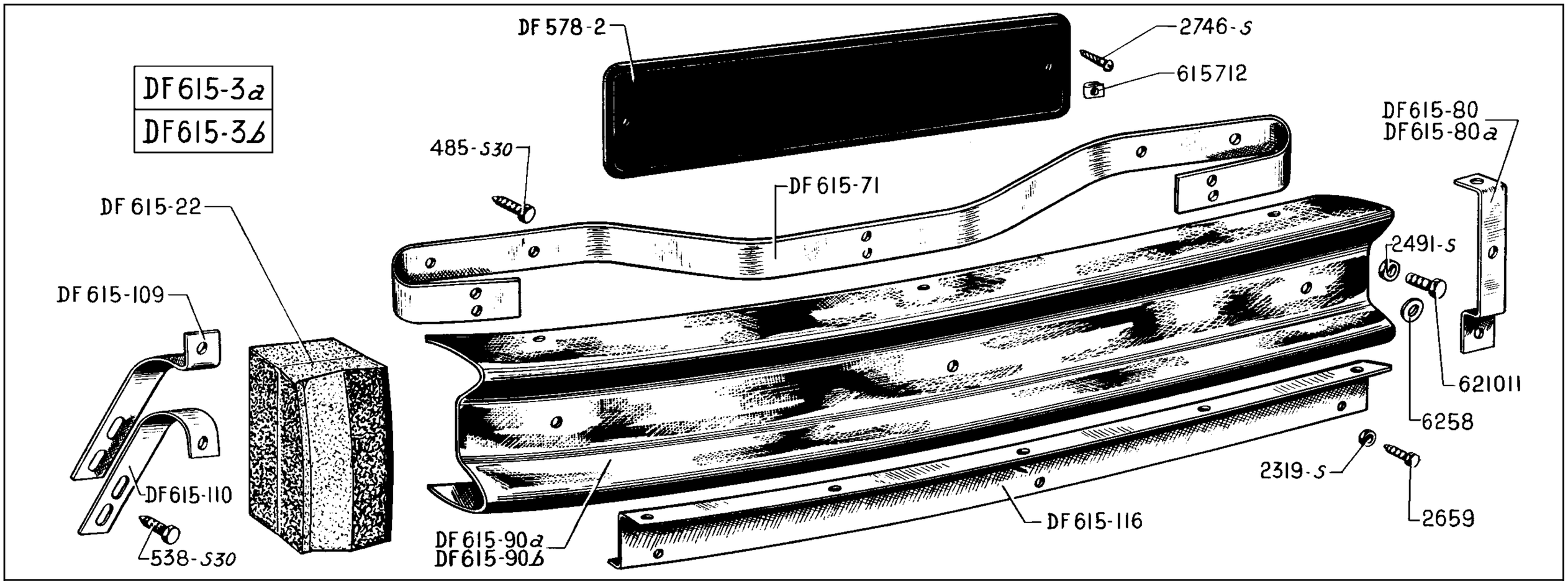
DF615-3a
DF615-3b
DF578-2
2746-S
615712
DF615-80
DF615-80a
485-S30
DF615-71
DF615-22
2491-S
DF615-109
621011
6258
2319-S
DF615-110
2659
538-S30
DF615-116
DF615-90a
DF615-90b

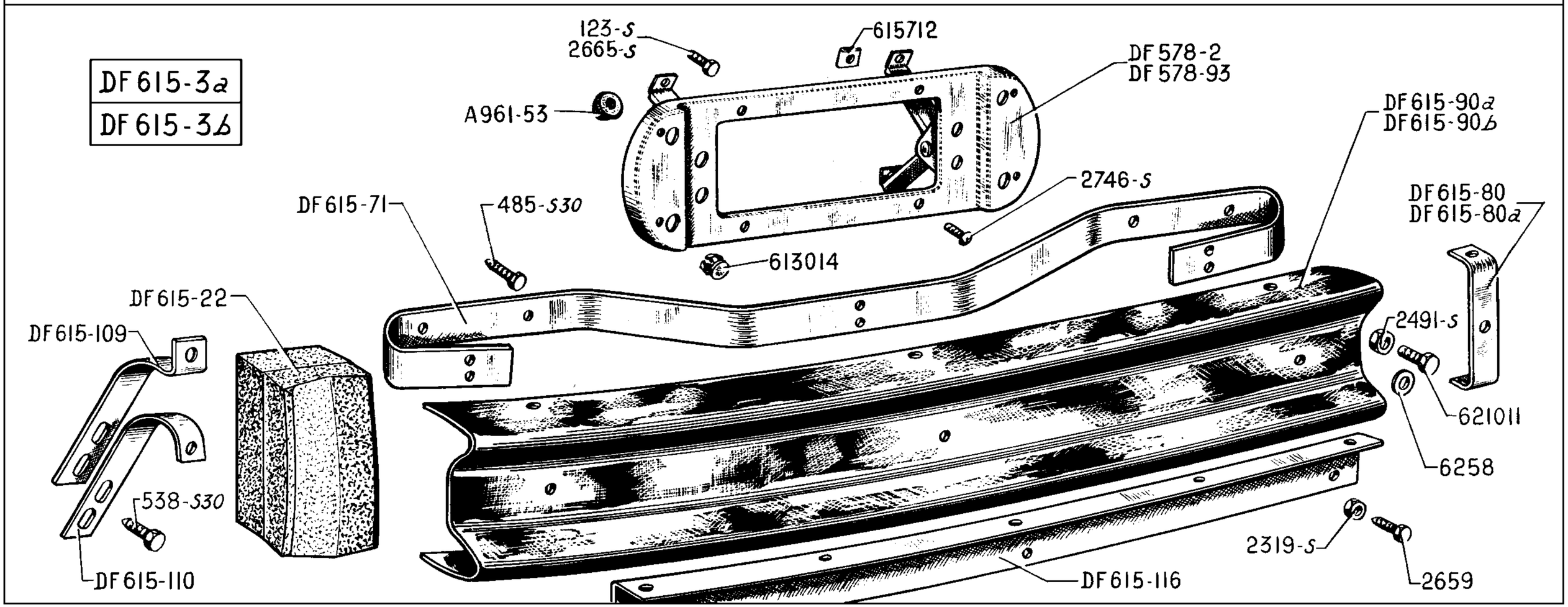
DF615-3a
DF615-3b
123-S
2665-S
615712
DF578-2
DF578-93
A961-53
DF615-90a
DF615-90b
2746-S
DF615-71
485-S30
DF615-80
DF615-80a
613014
DF615-22
DF615-109
2491-S
621011
6258
538-S30
2319-S
DF615-110
DF615-116
2659

NUMBER	DESCRIPTION	No. OFF
	Except U.S.A.	
DF 578-2	Number plate, rear.	2
DF 615-3a	Bumpers, rear, complete with reinforcement, without bracket. Until September 1962.	1
DF 615-3b	*Bumpers, rear, complete with reinforcement, without bracket. September 1962 - June 1964. Replaced by DF 615-3c.*	1
DF 615-3c	Bumpers, rear, complete, (rectangular form) with reinforcement, without bracket. Since June 1964.	1
DF 615-22	Buffer, rubber, side, rear.	2
DF 615-71	*Bracket, for rear bumpers, on lower door of boot. Replaced by DF 615-71a.*	1
DF 615-71a	Bracket for rear bumpers on lower door of boot. Since June 1964.	1
DF 615-80	Reinforcement plate for rear bumpers. Since September 1962.	3
DF 615-80a	Reinforcement plate for rear bumpers. Until September 1962.	3
DF 615-90a	Bumper bar, rear. Until September 1962.	1
DF 615-90b	*Bumper bar, rear. September 1962 - June 1964. Replaced by DF 615-90c.*	1
DF 615-90c	Bumper bar, rear (rectangular form). Since June 1964.	1
DF 615-109	Support, upper, for securing buffer.	2
DF 615-110	Support, lower, for securing buffer.	2
DF 615-116	Plate section, lower, for rear bumpers. Until September 1962.	1
485-S 30	Screw, hex. head, 7 x 20, pointed, for securing bracket on lower part (R. III).	4
538-S 30	Screw, hex. head, pointed, 9 x 25, for securing the buffer support bracket (R. III).	4

NUMBER	DESCRIPTION	No. OFF
2.319-S	Nut, hex., 5 x 75, for the screws on the reinforcement and plate section of bumpers (R. III).	6
2.491-S	Nut, hex., 7 x 100, for the screws securing the rear bumpers (R. III).	4
2.659	*Screw, hex. head, 5 x 13, for securing the reinforcement and plate section of rear bumpers (R. III). Replaced by 283-S.*	6
2.746-S	Screw, round head, 4.85 (cruciform slot) for securing the rear number plate (R. VI).	4
6.258	*Washer, 10 x 28 x 2, for the nuts securing the bumpers (R. IV). No longer supplied.*	4
615.712	Nut, self-locking, for screws 4.85, for securing the rear number plate (R. VI).	4
621.011	Screw, hex. head, 7 x 30, for securing the rear bumpers (R. III).	3
	U.S.A.	
A 961-53	Socket, rubber, for pivoting number plate bracket, rear. Since September 1960.	4
DF 578-2	Number plate, rear. Until September 1960.	2
DF 578-93	Support for rear number plate, pivoting. Since September 1960.	1
DF 615-3a	Bumper, rear, complete with reinforcement, without support. Until September 1962.	1
DF 615-3b	*Bumper, rear, complete with reinforcement, without support. September 1962 - June 1964. Replaced by DF 615-3c.*	1
DF 615-3c	Bumpers, rear, complete (rectangular form) with reinforcement, without bracket. Since June 1964.	1
DF 615-22	Buffer, rubber, side, rear.	2
DF 615-71	*Bracket, for rear bumpers on lower door of boot. Replaced by DF 615-71a.*	1
DF 615-71a	Bracket for rear bumpers on lower door of boot. Since June 1964.	1

NUMBER	DESCRIPTION	No. OFF
DF 615-80	Reinforcement for bumpers, rear. Since September 1962.	3
DF 615-80a	Reinforcement for bumpers, rear. Until September 1962.	3
DF 615-90a	Bumper bar, rear. Until September 1962.	1
DF 615-90b	*Bumper bar, rear. September 1962 - June 1964. Replaced by DF 615-90c.*	1
DF 615-90c	Bumper bar, rear (rectangular form). Since June 1964.	1
DF 615-109	Support, upper, for securing buffer.	2
DF 615-110	Support, lower, for securing buffer.	2
DF 615-116	Plate section, lower, for rear bumpers, Until September 1962.	1
123-S	Screw, round head, 5 x 10, for securing the lower part of the number plate support (R. III). Since September 1960.	2
485-S 30	Screw, hex. head, 7 x 20, pointed, for securing bracket on lower door (R. III).	4
538-S 30	Screw, hex. head, 9 x 25, pointed, for securing the buffer support (R. III).	4
2.319-S	Nut, hex., 5 x 75, for the nuts of the reinforcement and plate section of the bumpers (R. III).	6
2.491-S	Nut, hex., 7 x 100, for the screws securing the rear bumpers (R. III).	4
2.659	*Screw, hex. head, 5 x 13, for securing the reinforcement and the plate section of the rear bumpers (R. III). Replaced by 283-S.*	6
2.665-S	Screw, round head, 5 x 16, (Parker), for the upper fixing of the member plate. Since September 1960.	2
2.746-S	Screw, round head, 4.85, (cruciform), for securing the number plate (R. VI). Until September 1960.	4
6.258	*Washer, 10 x 28 x 2, for the nut securing the bumpers (R. IV). No longer supplied.*	4
613.014	Closing plug rear number plate, pivoting (R. VI). Since September 1960.	8
615.712	Nut, self locking for screw for upper fixing of number plate (R. VI). Since September 1960.	2
621.011	Screw, hex. head, 7 x 30, for securing the rear bumpers (R. III).	3

The numbers underlined indicate new parts which do not appear on the illustration.

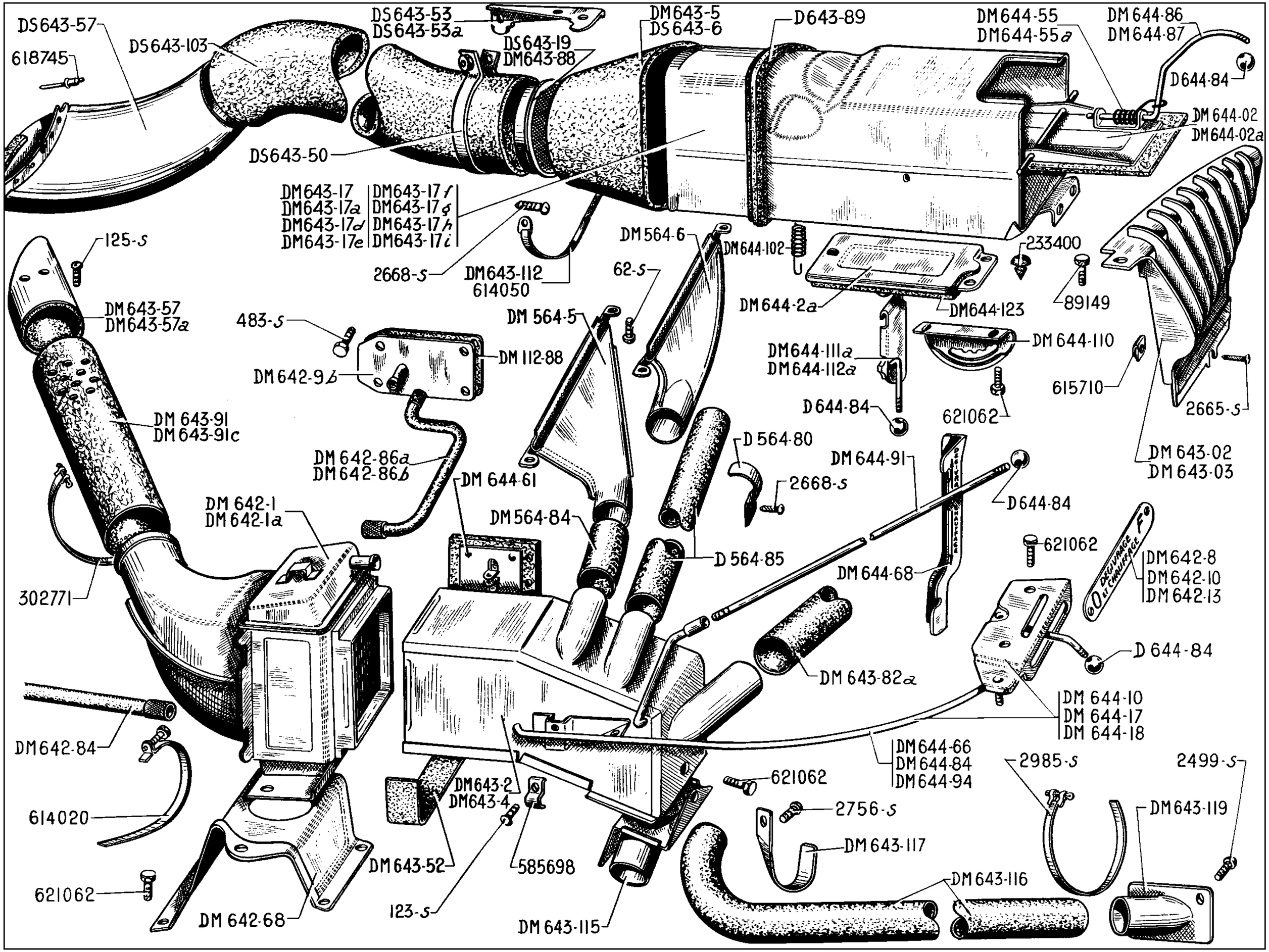
DS643-57
618745
DS643-103
DS643-53
DS643-53a
DS643-19
DM643-88
DM643-5
DS643-6
D643-89
DM644-55
DM644-55a
DM644-86
DM644-87
D644-84
DM644-02
DM644-02a
DS643-50
DM643-17
DM643-17a
DM643-17d
DM643-17e
DM643-17f
DM643-17g
DM643-17h
DM643-17i
125-S
2668-S
DM643-112
614050
DM564-6
DM644-102
62-S
233400
89149
DM644-2a
DM644-123
DM644-110
DM643-57
DM643-57a
483-S
DM 564-5
DM 112-88
DM642-9b
DM644-111a
DM644-112a
615710
2665-S
D644-84
621062
DM 643-91
DM 643-91c
D 564-80
DM644-91
DM643-02
DM643-03
DM 642-86a
DM 642-86b
DM 644-61
2668-S
D644-84
DM 642-1
DM 642-1a
DM564-84
D 564-85
621062
DM642-8
DM642-10
DM642-13
DM644-68
302771
DM 643-82a
D 644-84
DM 644-10
DM 644-17
DM 644-18
DM642-84
DM644-66
DM644-84
DM644-94
2985-S
2499-S
DM643-2
DM643-4
621062
614020
2756-S
DM643-119
DM643-117
DM643-52
585698
DM643-116
621062
123-S
DM 643-115
DM 642-68

NUMBER	DESCRIPTION	No. OFF
	DEMISTING **Until September 1964**	
DM 564-5	Nozzle for warm air distribution, L.H.	1
DM 564-6	Nozzle for warm air distribution, R.H.	1
D 564-80	Clip for securing R.H. tube.	1
DM 564-84	Tube, flexible, 45 x 51 x 65, for connecting L.H. warm air distribution nozzle (R. VI).	1
D 564-85	Tube, flexible, 45 x 51 x 500, for connecting R.H. warm air distribution nozzle (R. VI).	1
62-S	Screw, round head, 4 diameter x 7.5 mm long, for securing warm air distribution nozzle (R. III).	4
2.668-S	Screw, round head, 3.5 diameter x 10 mm long, Parker for securing R.H. flexible tube (R. VI).	1
	HEATING (EXCEPT COLD CLIMATES) AND VENTILATION **Until September 1964**	
DM 112-88	Joint for heating connection (cylinder head tube) (R. VI).	1
D 564-80	Clip for securing R.H. flexible tube to dashboard.	3
DM 642-1	*Radiator, heater (R. VI). Until September 1962. Replaced by DM 642-1a; order in addition: 1-DM 643-57a, 1-DM 643-91c.*	1
DM 642-1a	Radiator, heater, diameter of air intake 86 mm (R. VI). Since September 1962.	1
DM 642-8	Indicator plate for demisting and heating (R. VI). L.H. steering.	1
DM 642-9b	Connection, heating, on cylinder head, 35 mm long.	1
DM 642-10	Indicator plate for heating control (R. VI). R.H. steering.	1
DM 642-13	Indicator plate for demisting and heating (R. VI). R.H. steering.	1

NUMBER	DESCRIPTION	No. OFF
DM 642-68	Bracket for heater radiator.	1
DM 642-84	Tube, flexible, 13.5 x 21, for water return, 330 mm long.	1
DM 642-86a	Tube, flexible, for feeding radiator, 325 mm undeveloped length. Since February 1960.	1
DM 642-86b	Tube, flexible, for feeding heating radiator (altitude corrector fitting). R.H. steering. Since September 1961.	1
DM 643-02	Grille, ventilator, L.H.	1
DM 643-03	Grille, ventilator, R.H.	1
DM 643-2	Duct for warm air distribution, L.H. steering.	1
DM 643-4	Duct for warm air distribution, R.H. steering.	1
DM 643-5	Connection, rubber, for air duct, right and left side, between front wing and ventilation duct. Until September 1962.	2
DS 643-6	Connection for air duct between feed and ventilation duct (R. VI). R.H. and L.H. Since September 1962.	2
DM 643-17	Duct for ventilation, with one shutter, L.H. Except CONFORT. Until September 1962.	1
DM 643-17a	Duct for ventilation, with one shutter, R.H. Except CONFORT. Until September 1962.	1
DM 643-17f	Duct for ventilation, with one shutter, L.H. Except CONFORT. Since September 1962.	1
DM 643-17g	Duct for ventilation, with one shutter, R.H. Except CONFORT. Since September 1962.	1
DS 643-19	Grille, against insects, on air intake duct, front wing. Since September 1962.	2
DS 643-50	Clip forming collar, with welded nut for securing ventilation duct on front wing. Since September 1962.	2

NUMBER	DESCRIPTION	No. OFF
DM 643-52	Joint, flexible, for joining radiator to distribution duct.	1
DS 643-53	Bracket for securing the feed duct on the L.H. front wing. Since September 1962.	1
DS 643-53a	Bracket for securing the feed duct on the R.H. front wing. Since September 1962.	1
DM 643-57	Connection, for warm air, on radiator stay. Until September 1962.	1
DM 643-57a	Connection, for warm air, on radiator stay. Since September 1962.	1
DS 643-57	Duct (metal), for air intake on front wing, right and left. Since September 1962.	2
DM 643-82a	Tube, flexible, for heating, R.H., 1.050 m long (R. VI).	1
DM 643-88	Insect grille on left and right front wings. Until September 1962.	2
D 643-89	Packing between heating and ventilation ducts and upper part of instrument board, 590 mm long (R. VI).	As nec.
DM 643-91	Tube, flexible, between hot air connection and radiator 330 mm long. Until September 1962.	1
DM 643-91c	Tube, flexible, between hot air connection and radiator, 86 mm diameter, 0.340 m long. Since September 1962.	1
DS 643-103	Tube, flexible, for air feed for right and left ventilation, 103 mm diameter x 0.840 m long (R. VI). Since September 1962.	2
DM 643-112	Clip, Ligarex, for securing the connection tube, 1.170 m long (R.VI).	4

NUMBER	DESCRIPTION	No. OFF
DM 644-02	Shutter, ventilation, L.H.	1
DM 644-02a	Shutter, ventilation, R.H.	1
DM 644-10	Heating control. L.H. steering.	1
DM 644-17	*Heating control. R.H. steering. Replaced by DM 644-17a.*	1
DM 644-18	*Heating and demisting control.R.H. steering. Replaced by DW 644-18.*	1
DW 644-18	Heating and demisting control.	1
DM 644-55	Spring, L.H. for ventilator shutter lever return.	1
DM 644-55a	Spring, R.H. for ventilator shutter lever return.	1
DM 644-61	Shutter, heating.	1
DM 644-66	Cable for operating heater shutter, 755 mm long (R. VI). L.H. steering.	1
DM 644-68	Guide, for lever operating warm air shutter (R. VI). L.H. steering.	1
D 644-84	Knob on lever for heating and ventilating shutters (R. VI).	3
DM 644-84	Cable, controlling shutter for heating and demisting, 765 mm long (R. VI). R.H. steering.	1
DM 644-86	Lever, R.H. controlling ventilation shutter.	1
DM 644-87	Lever, L.H. controlling ventilation shutter.	1
DM 644-91	Lever, controlling heating deflection shutter, L.H. steering.	1
DM 644-94	Cable controlling heating shutter, 685 mm long (R. VI). R.H. steering.	1
123-S	Screw, round head, 5 diameter x 10 mm long, for securing shutter control cable (R. III).	1
125-S	Screw, round head, 5 diameter x 15 mm long, for securing heating connection to radiator stay (R. III).	2
483-S	Screw, hex. head, 7 diameter x 15 mm long, securing heating connection on cylinder head (R. III).	4

NUMBER	DESCRIPTION	No. OFF
2.665-S	Screw, round head, 5 diameter x 16 mm long, for lower fixing of ventilation grille (R. VI).	2
2.668-S	Screw, round head, 3.5 diameter x 10 mm long for securing (R. VI):	
	- insect grille.	4
	- clip for flexible tube.	4
2.884-S	Collar for securing flexible heater pipe, 550 mm long (R. VI).	3
89.149	Screw, hex. head, 5 diameter x 18 mm long, for upper fixing of ventilation grille (R. III).	2
302.771	*Clip for securing flexible tube for heating (R.VI).Replaced by 2.884-S.*	3
585.698	Clip for shutter control cable (R.III).	1
614.020	Clip, Ligarex, with screw, securing flexible tube on radiator, 113 mm long (R. VI).	4
614.050	Clip, Ligarex, securing the ducts on air intake side and insect grille, 0.720 m long (R. VI).	4
615.710	Nut, self-locking, for 4.85 mm screw for lower fixing of ventilation grille (R. VI).	2
618.745	Rivet POP for securing the air intake duct on the wing (R. VI).	8
621.062	Screw, hex. head, 5 diameter x 14 mm long, for securing (R. III):	
	- radiator bracket.	4
	- radiator.	4
	- heating duct.	2
	- heating control.	2
	- ventilation duct.	2
	EQUIPMENT CONFORT	
	Until September 1964	
DM 643-17d	Duct, ventilation, with 2 shutters, L.H. Until September 1962.	1
DM 643-17e	Duct, ventilation, with 2 shutters, R.H. Until September 1962.	1
DM 643-17h	Duct, ventilation, with 2 shutters, L.H. Since September 1962.	1
DM 643-17i	Duct, ventilation, with 2 shutters, R.H. Since September 1962.	1

NUMBER	DESCRIPTION	No. OFF
DM 643-115	Connection for heating rear seats of car, on distribution duct.	1
DM 643-116	Tube, flexible, for reat seat heating 45 mm diameter x 1500 mm long (R. VI).	1
DM 643-117	Clip holding duct for rear seat heating.	1
DM 643-119	Plate holding duct for rear seat heating.	1
DM 644-2a	Shutter for ventilation on L.H. and R.H. ducts.	2
D 644-84	Knob for lever of deflection shutter (R. VI).	2
DM 644-102	Spring for ventilator shutter return.	2
DM 644-110	Guide for R.H. and L.H. deflection shutter lever.	2
DM 644-111a	Shutter for ventilation deflection, L.H.	1
DM 644-112a	Shutter for ventilation deflection, R.H.	1
DM 644-123	Sealing joint for shutter on ventilation duct (R. VI). Since October 1961.	2
2.499-S	Screw, raised countersunk head, 3.5 diameter x 9.5 mm long (cruciform slot), for securing plate holding duct (R. VI).	2
2.756-S	Screw, round head, 3.5 diameter x 9.5 mm long (cruciform slot), for securing duct (R. VI).	1
2.985-S	Clip with pin, for holding flexible tube, 438 mm long (R. VI).	2
233.400	Buffer, for ventilation shutter (R. IV).	4
621.062	Screw, hex. head, 5 diameter x 14 mm long (R. III) for securing:	
	- guide for deflection shutter lever.	4
	- heating connection on distributor duct.	1

The numbers underlined indicate new parts which do not appear on the illustration.

NUMBER	DESCRIPTION	No. OFF
	DEMISTING **Since September 1964**	
DW 564-5	Demisting nozzle (R. VI).	1
DW 564-60	Sealing strip between nozzle and facia panel, 185 mm long.	2
DW 564-80	Finishing strip for nozzle on facia panel, left-hand, 220 mm long.	1
DW 564-80a	Finishing strip for nozzle on facia panel, right-hand, 215 mm long.	1
DW 564-84	Tube, flexible, between warm air distribution duct and nozzle, 75 mm diameter x 88 mm long (R. VI).	1
DM 564-117	Plug for demisting nozzles, right-hand (R. VI).	1
	HEATING AND VENTILATION **Since September 1964**	
DM 112-88	Joint for heating connection.	1
D 564-80	Clip for securing right-hand flexible tube on instrument panel.	3
DM 642-1a	Radiator, heater, diameter of air intake, 86 mm (R. VI).	1
DW 642-8	Indicator plate for control of heating, ventilation and demisting (R. VI).	1
DM 642-9b	Connection on cylinder head for heating, length of tube 35 mm.	1

NUMBER	DESCRIPTION	No. OFF
DM 642-68	Bracket for heater radiator.	1
DM 642-84	Tube, flexible, 13.5 x 21, for water return, 330 mm long.	1
DM 642-86a	Tube, flexible, for feeding radiator, 325 mm undeveloped length.	1
DM 642-86b	Tube, flexible, for feeding heating radiator, (altutude corrector fitting). R.H. steering.	1
DW 643-02b	Grille, adjustable, on ventilator duct (R. VI).	2
DS 643-6	Connection for air duct between feed and ventilation duct, right hand left-hand (R. VI).	2
DM 643-10e	Duct for warm air distribution.	1
DM 643-11a	Grille, for ventilation on facia panel, right-hand. L.H. steering.	1
DM 643-11b	Grille, for ventilation on facia panel, left-hand. R.H. steering.	1
DW 643-17b	Ventilation duct, left-hand.	1
DS 643-17c	Ventilation duct, right-hand.	1
DS 643-19	Insect grille on air intake on front wing.	2
DS 643-50	Clip forming collar with welded nut for securing ventilation duct on front wing.	2
DM 643-52	Flexible tube between radiator and distribution duct.	1
DS 643-53	Clip securing feed duct on front left-hand wing.	1

NUMBER	DESCRIPTION	No. OFF
DS 643-53a	Clip securing feed duct on front right-hand wing.	1
DM 643-57a	Air intake fixed on radiator tie-rod.	1
DS 643-57	Duct (steel) for air intake on front wing, right and left-hand.	2
DM 643-82a	Flexible tube for interior heating, right-hand, 1050 mm long (R. VI).	1
D 643-89	Sealing strip between ventilation duct and instrument board, upper part, 590 mm long (R. VI).	As nec.
DM 643-91c	Flexible pipe connecting air intake to heating radiator, 86 mm diameter x 340 mm long.	1
DS 643-103	Flexible pipe for air feed for ventilation right and left-hand, 103 mm long x 840 mm long (R. VI).	2
DM 643-112	Collar, Ligarex, for securing screw duct, 1170 mm long (R. VI).	4
DW 644-02	Shutter, ventilation, upper, in duct:	2
DW 644-2	Shutter, ventilation, lower, under duct.	2
DW 644-17	Heater control.	1
DW 644-18	Control for heating and demisting.	1
DW 644-55	Spring, 5.5 x 20, for press-button on control lever of ventilation shutters on duct.	2

NUMBER	DESCRIPTION	No. OFF
DM 644-61	Shutter for heater.	1
DW 644-72	Control cable for ventilation shutter (R. VI).	2
DM 644-84	Control cable for adjustment of direction of heating, 765 mm long (R. VI).	1
DW 644-84	Knob on control levers for heating shutter control (R. VI).	2
DW 644-87a	Control lever for ventilation shutters, 152 mm long.	4
DW 644-92	Control knob for levers of ventilation, on dashboard (R. VI).	4
DM 644-94	Control cable for heater lever, 685 mm long (R. VI).	1
DW 644-119	Push-button for controlling shutters on ventilation duct (R. VI).	4
125-S	Screw, round head, 5 x 10, for securing heater intake on radiator tie-rod (R. III).	2
483-S	Screw, hex. head, 7 x 15, for securing heater intake on cylinder (R. III).	4

NUMBER	DESCRIPTION	No. OFF
2.270-S	Screw, raised countersunk head, 4 x 14, for securing heater indicator plate (R. VI).	3
2.659	Screw, hex. head, 5 x 13, for securing cable trunnion on shutter control (R. III).	1
2.884-S	Clip securing flexible pipe for heater, 550 mm long (R. VI).	2
585.698	Trunnion for shutter control (R. III).	1
614.020	Clip securing flexible tube on radiator, 113 mm long (R. VI).	3
614.050	Collar, Ligarex, securing the ducts on the air intake side and the grille, 720 mm long (R. VI).	4
618.745	Rivet, POP, for securing duct on air intake on wing (R. VI).	8
621.062	Screw, hex. head, 5 x 14, for securing (R. III):	
	- radiator bracket.	4
	- radiator.	4
	- control for heating and demisting.	4
	- clips for securing duct on front wing.	6

NUMBER	DESCRIPTION	No. OFF
	CONFORT EQUIPMENT **Since September 1964**	
DW 643-115	Heater intake on distribution duct.	1
DM 643-116	Flexible pipe for heating the rear seats, 45 mm diameter x 1500 mm long (R. VI).	1
DM 643-117a	Clip forming collar for securing heating duct to the rear seats.	1
DW 643-119	Plate for securing heating duct to rear seats.	1
2.499-S	Screw, raised countersunk head, 3.5 x 9.5 for securing the plate holding the duct (R. VI).	2
2.756-S	Screw, round head, 3.5 x 9.5, for securing the clip on the duct (R. VI).	1
2.985-S	Collar securing the flexible duct, 438 mm long (R. VI).	2
621.062	Screw, hex. head, 5 x 14, for securing the heater intake on the duct (R. III).	1

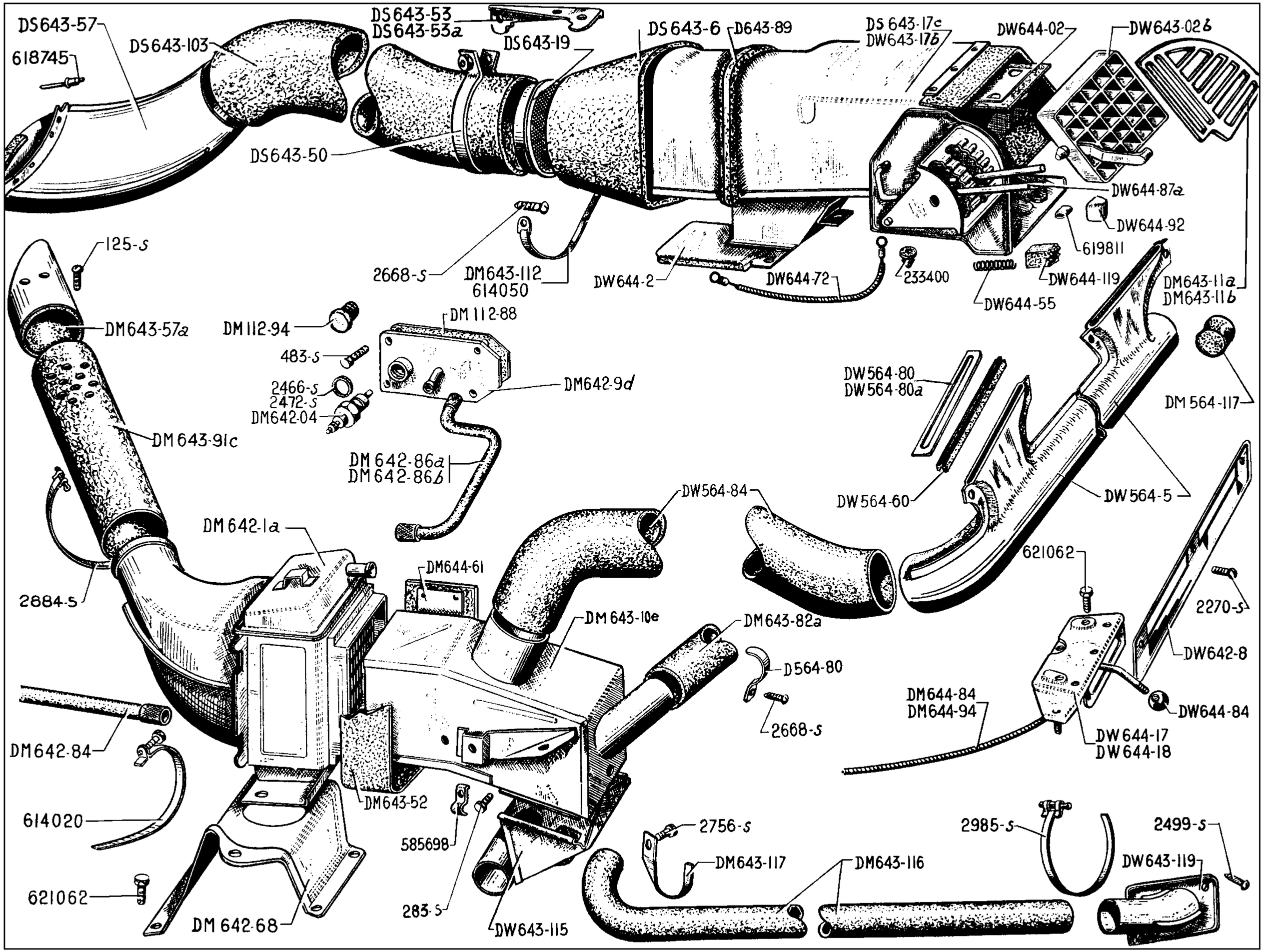
DS643-57
618745
DS643-103
DS643-53
DS643-53a
DS643-19
DS643-6
D643-89
DS643-17c
DW643-17b
DW644-02
DW643-02b
DS643-50
DW644-87a
DW644-92
619811
125-s
2668-s
DM643-112
614050
DW644-2
DW644-72
233400
DW644-119
DW644-55
DM643-11a
DM643-11b
DM643-57a
DM112-94
DM112-88
483-s
2466-s
2472-s
DM642-04
DM642-9d
DW564-80
DW564-80a
DM564-117
DM643-91c
DM642-86a
DM642-86b
DW564-84
DW564-60
DW564-5
DM642-1a
DM644-61
621062
2884-s
DM643-10e
DM643-82a
2270-s
DW642-8
D564-80
2668-s
DM644-84
DM644-94
DW644-84
DW644-17
DW644-18
DM642-84
614020
DM643-52
585698
2756-s
DM643-117
DM643-116
2985-s
2499-s
DW643-119
621062
283-s
DM642-68
DW643-115

NUMBER	DESCRIPTION	No. OFF
	DEMISTING **Since September 1964**	
DW 564-5	Nozzle for demisting (R. VI).	1
DW 564-60	Sealing trim between nozzle and dashboard, 185 mm long.	2
DW 564-80	Finishing trim for nozzle on dashboard, left-hand, 220 mm long.	1
DW 564-80a	Finishing trim for nozzle on dashboard, right-hand, 215 mm long.	1
DW 564-84	Tube, flexible, 75 x 88, connecting distribution duct and nozzle (R. VI).	1
DM 564-117	Plug on demisting nozzle, right-hand (R. VI).	1
	HEATING AND VENTILATION **Since September 1964**	
DM 112-88	Joint for heating connection.	1
DM 112-94	Plug for closing thermometer bulb unit opening, threaded 18 x 150 (arrangement with thermometer). Since November 1964.	1
D 564-80	Clip securing flexible duct on panel, right-hand.	3
DM 642-04	Thermometer bulb unit (R. VI). Since November 1964.	1
DM 642-1a	Heating radiator, diameter of air intake 86 mm (R. VI).	1
DW 642-8	Indicator plate for control of heating, ventilation and demisting (R. VI).	1
DM 642-9b	*Heating outlet on cylinder head, length of tube 35 mm. Until November 1964.* *Replaced by DM 642-9d; order in addition: 1-DM 112-94, 1-2.472-S.*	1
DM 642-9d	Closing plate for cylinder head with connections for heating and thermometer bulb unit. Since November 1964.	1

NUMBER	DESCRIPTION	No. OFF
DM 642-68	Bracket for heater radiator.	1
DM 642-84	Tube, flexible, 13.5 x 21, for water return, 330 mm long.	1
DM 642-86a	Tube, flexible, for feeding radiator, 325 mm undeveloped length.	1
DM 642-86b	Tube, flexible, for feeding heating radiator, (altutude corrector fitting). R.H. steering.	1
DW 643-02b	Grille, adjustable, on ventilator duct (R. VI).	2
DS 643-6	Connection for air duct between feed and ventilation duct, right hand left-hand (R. VI).	2
DM 643-10e	Duct for warm air distribution.	1
DM 643-11a	Grille, for ventilation on facia panel, right-hand. L.H. steering.	1
DM 643-11b	Grille, for ventilation on facia panel, left-hand. R.H. steering.	1
DW 643-17b	Ventilation duct, left-hand.	1
DS 643-17c	Ventilation duct, right-hand.	1
DS 643-19	Insect grille on air intake on front wing.	2
DS 643-50	Clip forming collar with welded nut for securing ventilation duct on front wing.	2
DM 643-52	Flexible tube between radiator and distribution duct.	1
DS 643-53	Clip securing feed duct on front left-hand wing.	1

NUMBER	DESCRIPTION	No. OFF
DS 643-53a	Clip securing feed duct on front right-hand wing.	1
DM 643-57a	Air intake fixed on radiator tie-rod.	1
DS 643-57	Duct (steel) for air intake on front wing, right and left-hand.	2
DM 643-82a	Flexible tube for interior heating, right-hand, 1050 mm long (R. VI).	1
D 643-89	Sealing strip between ventilation duct and instrument board, upper part, 590 mm long (R. VI).	As nec.
DM 643-91c	Flexible pipe connecting air intake to heating radiator, 86 mm diameter x 340 mm long.	1
DS 643-103	Flexible pipe for air feed for ventilation right and left-hand, 103 mm long x 840 mm long (R. VI).	2
DM 643-112	Collar, Ligarex, for securing screw duct, 1170 mm long (R. VI).	4
DW 644-02	Shutter, ventilation, upper, in duct.	2
DW 644-2	Shutter, ventilation, lower, under duct.	2
DW 644-17	Heater control.	1
DW 644-18	Control for heating and demisting.	1
DW 644-55	Spring, 5.5 x 20, for press-button on control lever of ventilation shutters on duct.	2

NUMBER	DESCRIPTION	No. OFF
DM 644-61	Shutter for heater.	1
DW 644-72	Control cable for ventilation shutter (R. VI).	2
DM 644-84	Control cable for adjustment of direction of heating, 765 mm long (R. VI).	1
DW 644-84	Knob on control levers for heating shutter control (R. VI).	2
DW 644-87a	Control lever for ventilation shutters, 152 mm long.	4
DW 644-92	Control knob for levers of ventilation, on dashboard (R. VI).	4
DM 644-94	Control cable for heater lever, 685 mm long (R. VI).	1
DW 644-119	Push-button for controlling shutters on ventilation duct (R. VI).	4
125-S	Screw, round head, 5 x 10, for securing heater intake on radiator tie-rod (R. III).	2
283-S	Screw, hex. head, 5 x 13, for securing trunnion on shutter control cable.	1
483-S	Screw, hex. head, 7 x 15, for securing heater intake on cylinder (R. III).	4

NUMBER	DESCRIPTION	No. OFF
2.270-S	Screw, raised countersunk head, 4 x 14, for securing heater indicator plate (R. VI).	3
2.466-S	Joint, fibre, 18.3 x 24 x 1 for thermometer bulb (R. VI). Since November 1964.	1
2.472-S	Joint, 18.3 x 24 x 2 for sealing plug (R. VI). Since November 1964.	1
2.884-S	Clip securing flexible heater duct, 550 mm long (R. VI).	2
585.698	Trunnion for shutter cable (R. III).	1
614.020	Clip securing flexible tube on radiator, 113 mm long (R. VI).	3
614.050	Collar, ligarex, securing ducts, air intake and grille side, 720 mm long (R. VI).	4
618.745	Rivet, POP, for securing air intake duct on wing (R. VI).	8
621.062	Screw, hex. head, 5 x 14, for securing (R. III):	
	- radiator support.	4
	- radiator.	4
	- heating and demisting control.	4
	- clips securing ducts on front wing.	6

NUMBER	DESCRIPTION	No. OFF
	CONFORT EQUIPMENT Since September 1964	
DW 643-115	Heater intake on distribution duct.	1
DM 643-116	Flexible pipe for heating the rear seats, 45 mm diameter x 1500 mm long (R. VI).	1
DM 643-117a	Clip forming collar for securing heating duct to the rear seats.	1
DW 643-119	Plate for securing heating duct to rear seats.	1
2.499-S	Screw, raised countersunk head, 3.5 x 9.5 for securing the plate holding the duct (R. VI).	2
2.756-S	Screw, round head, 3.5 x 9.5, for securing the clip on the duct (R. VI).	1
2.985-S	Collar securing the flexible duct, 438 mm long (R. VI).	2
621.062	Screw, hex. head, 5 x 14, for securing the heater intake on the duct (R. III).	1

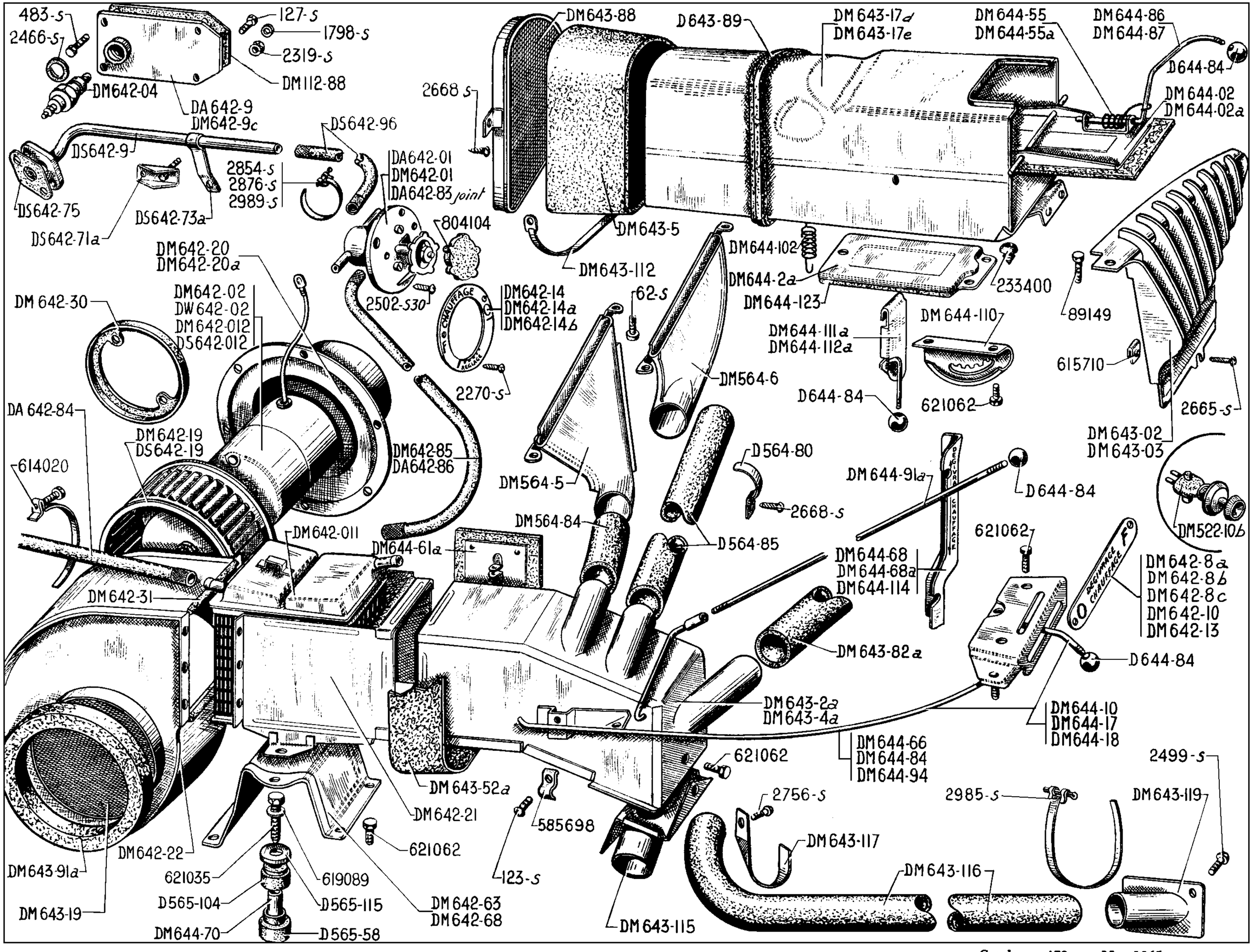
483-s
2466-s
127-s
1798-s
2319-s
DM112-88
DM642-04
DA642-9
DM642-9c
DS642-96
DS642-9
2854-s
2876-s
2989-s
DA642-01
DM642-01
DA642-83 joint
DS642-75
DS642-73a
DS642-71a
804104
2502-s30
DM642-20
DM642-20a
DM642-02
DW642-02
DM642-012
DS642-012
DM 642-30
DM642-14
DM642-14a
DM642-14b
2270-s
DA 642-84
DM642-19
DS642-19
614020
DM642-85
DA642-86
DM642-011
DM644-61a
DM642-31
DM643-88
2668 s
D643-89
DM643-17d
DM643-17e
DM644-55
DM644-55a
DM644-86
DM644-87
D644-84
DM644-02
DM644-02a
DM643-5
DM643-112
DM644-102
DM644-2a
DM644-123
233400
89149
62-s
DM564-6
DM644-111a
DM644-112a
DM 644-110
615710
D644-84
621062
2665-s
DM643-02
DM643-03
DM564-5
D564-80
2668-s
DM644-91a
D644-84
DM564-84
D564-85
DM522-10b
621062
DM644-68
DM644-68a
DM644-114
DM642-8a
DM642-8b
DM642-8c
DM642-10
DM642-13
DM643-82a
D644-84
DM643-2a
DM643-4a
DM644-10
DM644-17
DM644-18
DM644-66
DM644-84
DM644-94
621062
2499-s
DM643-52a
DM642-21
585698
2756-s
2985-s
DM643-119
DM643-117
DM643-116
DM642-22
621062
DM643-91a
621035
619089
123-s
D565-104
D565-115
DM642-63
DM642-68
DM643-19
DM644-70
D565-58
DM643-115

NUMBER	DESCRIPTION	No. OFF
	NOTE - See page 49 for radiator blind.	
	Until September 1962	
	DEMISTING	
DM 564-5	Nozzle for warm air distribution, L.H.	1
DM 564-6	Nozzle for warm air distribution, R.H.	1
D 564-80	Clip for securing R.H. tube.	1
DM 564-84	Tube, flexible, 45 x 51 x 65, for connecting L.H. warm air distribution nozzle (R. VI).	1
D 564-85	Tube, flexible, 45 x 51 x 500, for connecting R.H. warm air distribution nozzle (R. VI).	1
62-S	Screw, round head, 4 diameter x 7.5 mm long, for securing warm air distribution nozzle (R. III).	4
2.668-S	Screw, round head, 3.5 diameter x 10 mm long, Parker, for securing R.H. flexible tube (R. VI).	1
	HEATING AND VENTILATION	
DM 112-88	Gasket for heating connection plate on cylinder head (R. VI).	1
DM 522-10b	Switch for heating, on instrument panel (R. VI).	1
D 564-80	Clip for securing R.H. flexible tube to scuttle.	3
D 565-58	Bush, rubber, with shoulder, 12 x 20 x 17 x 6, for screws securing heating unit (R. VI).	3

NUMBER	DESCRIPTION	No. OFF
D 565-104	Bush, rubber, 8 x 20 x 8, for screws securing heating unit (R. VI).	3
D 565-115	Cup washer for bush for heating unit (R. VI).	3
DA 642-01	Stop valve in heating circuit (R. VI). Until September 1960.	1
DM 642-01	Stop valve for regulating heater (R. VI). Since September 1960.	1
DM 642-02	*Heating unit, front (R. VI). Until January 1962. Replaced by DW 642-02.*	1
DW 642-02	Heating unit, front, Ducellier, secured to engine by 3 screws (3215B) (R. VI). Since January 1962.	1
DM 642-04	Temperature gauge bulb (R. VI).	1
DM 642-011	Radiator for heating (R. VI).	1
DM 642-012	Motor, 12 volts, secured by 2 screws (R. VI). Until January 1962.	1
DS 642-012	Motor, 12 volts, fixed by 3 screws (R. VI). Since January 1962.	1
DM 642-8a	Indicator plate for control of ventilation, demisting and heating (R. VI). U.S.A.	1
DM 642-8b	Indicator plate for control of ventilation, demisting and heating (R. VI).	1
DM 642-8c	Indicator plate for control of ventilation, demisting and heating (R. VI). LATIN AMERICA.	1

NUMBER	DESCRIPTION	No. OFF
DA 642-9	Connection plate, heating, on cylinder head. Until September 1960.	1
DM 642-9c	Plate on cylinder head, with welded nut for thermometer bulb. Since September 1960.	1
DS 642-9	Tube, 20 x 22, with water outlet connection. Since September 1960.	1
DM 642-10	Indicator plate for heating control (R. VI). R.H. steering.	1
DM 642-13	Indicator plate for demisting and heating (R. VI). R.H. steering.	1
DM 642-14	Indicator plate for adjusting heating (R. VI).	1
DM 642-14a	Indicator plate for adjusting heating (R. VI). U.S.A.	1
DM 642-14b	Indicator plate for adjusting heating (R. VI). LATIN AMERICA.	1
DM 642-19	Turbine (R. VI). Until January 1962.	1
DS 642-19	Turbine (R. VI). Since January 1962.	1
DM 642-20	Bracket for motor (R. VI). Until January 1962.	1
DM 642-20a	Bracket for engine secured by 3 screws (R. VI). Since January 1962.	1
DM 642-21	Housing for radiator (R. VI).	1
DM 642-22	Cowl for turbine (R. VI).	1
DM 642-30	Thrust ring for motor (R. VI). Until January 1962.	1

NUMBER	DESCRIPTION	No. OFF
DM 642-31	Joint, rubber, between cowl and casing (R. VI).	4
DM 642-63	Bracket, front, for heating unit.	1
DM 642-68	Bracket, lower, for heating unit.	1
DS 642-71a	Support with welded screw, for securing water outlet tube. Since September 1960.	1
DS 642-73a	Support stay for water outlet tube.	1
DS 642-75	Joint, oval, for flange on water outlet tube, 2 holes, 5.5 diameter x 38 mm between centres (R. VI). Since September 1960.	1
DA 642-83	*Gasket, oval, for heating stop valve (R. VI). Until September 1960. No longer supplied.*	1
DA 642-84	Tube, flexible, for water return.	1
DM 642-85	Tube, rubber, for feed connection between stop valve and heater radiator of front heater unit.	1
DA 642-86	Tube, flexible, for feed of heater unit. Until September 1960.	1
DS 642-96	Tube, rubber, for hot water outlet. Since September 1960.	1
DM 643-02	Grille for ventilator, L.H.	1
DM 643-03	Grille for ventilator, R.H.	1
DM 643-2a	*Duct for hot air distribution. Replaced by DM 643-10c; order in addition: 1-DS 643-52.*	1
DM 643-4a	Duct for hot air distribution, R.H. steering.	1
DM 643-5	Connection, rubber, for air duct, R.H. and L.H. between front wing and ventilation duct.	1

NUMBER	DESCRIPTION	No. OFF
DM 643-17d	Duct for ventilation with two shutters, L.H. Replaces duct fitted until October 1961.	1
DM 643-17e	Duct for ventilation with two shutters, R.H. Replaces duct fitted until October 1961.	1
DM 643-19	Insect grille on heating unit (R. VI).	1
DM 643-52a	Tube, flexible, connecting heating unit to distribution duct.	1
DM 643-82a	Tube, flexible, for heating, right side, 1150 mm long (R. VI).	1
DM 643-88	Insect grille on L.H. and R.H. front wings.	2
D 643-89	Packing between heating and ventilation ducts and upper part of instrument board, 590 mm long (R. VI).	As nec.
DM 643-91a	Tube, flexible, connecting front wing and heating unit.	1
DM 643-112	Clip, Ligarex, securing connection tube, 1.170 m long (R. VI).	4
DM 643-115	Connection for heating rear of car, on distribution duct.	1
DM 643-116	Tube, flexible, for rear seat heating, 45 mm diameter x 1.500 m long (R. VI).	1
DM 643-117	Clip holding duct for rear seat heating.	1

NUMBER	DESCRIPTION	No. OFF
DM 643-119	Plate holding duct for rear seat heating.	1
DM 644-02	Shutter, ventilation, L.H.	1
DM 644-02a	Shutter, ventilation, R.H.	1
DM 644-2a	Shutter, for ventilation on R.H. and L.H. ducts.	2
DM 644-10	Heating control, L.H. steering.	1
DM 644-17	Heating control, R.H. steering.	1
DM 644-18	*Control for heating and demisting. R.H. steering. Replaced by DW 644-18.*	1
DM 644-55	Spring. L.H. for ventilator shutter lever return.	1
DM 644-55a	Spring. R.H. for ventilator shutter lever return.	1
DM 644-61a	Shutter for heating, on front distribution duct for hot air.	1
DM 644-66	Cable for operating heating shutter, 755 mm long (R. VI).	1
DM 644-68	Guide for lever operating warm air shutter (R. VI). L.H. steering.	1
DM 644-68a	Guide for lever operating warm air shutter (R. VI). LATIN AMERICA.	1
DM 644-70	Distance piece, 5.5 x 8 x 10.5, for bush securing heating unit.	3

NUMBER	DESCRIPTION	No. OFF
D 644-84	Knob for lever (R. VI):	
	- for heating and ventilation shutters.	3
	- for deflection shutter.	2
DM 644-84	Cable for control of shutter, heating and demisting, 0.765 m long (R. VI). R.H. steering.	1
DM 644-86	Lever, R.H. controlling ventilation shutter.	1
DM 644-87	Lever, L.H. controlling ventilation shutter.	1
DM 644-91a	Lever controlling heating deflection shutter.	1
DM 644-94	Cable for control of heating shutter, 0.685 m long (R. VI). R.H. steering.	1
DM 644-102	Spring for ventilator shutter return.	2
DM 644-110	Guide for R.H. and L.H. deflection shutter lever.	2
DM 644-111a	Shutter for ventilation deflector, L.H. Since October 1961.	1
DM 644-112a	Shutter for ventilation deflector, R.H. Since October 1961.	1
DM 644-114	Guide for control lever of hot air shutter (R. VI). U.S.A.	1
DM 644-123	Sealing gasket for shutter on ventilation duct.	1
123-S	Screw, round head, 5 diameter x 10 mm long, for securing shutter control cable (R. III).	1
127-S	Screw, round head, 5 diameter x 20 mm long, for securing valve (R. III). Until September 1960.	2
483-S	Screw, hex. head, 7 diameter x 15 mm long, securing heating connection on cylinder head (R. III).	4

NUMBER	DESCRIPTION	No. OFF
1.798-S	Washer, fibre, 5.2 x 12 x 1, under screw securing circuit stop valve (R. VI). Until September 1960.	2
2.270-S	Screw, raised countersunk head, 4 x 14, for securing the heater indicator plate (R. VI).	3
2.319-S	Nut, hex., 5 x 75, for the screws securing (R. III):	
	- front support of heating unit.	2
	- stop valve for circuit. Until September 1960.	2
2.466-S	Joint, fibre, 18.3 x 24 x 1, for temperature gauge bulb (R. VI).	1
2.499-S	Screw, raised countersunk head, 3.5 x 9.5 mm long (cruciform slot), for securing plate holding duct (R. VI).	2
2.502-S 30	Screw, round head, 5 diameter x 12 long, pointed, (cruciform slot) for securing the valve on the body (R. VI).	3
2.665-S	Screw, round head, 5 diameter x 16 mm long, for securing ventilation grille bottom (R. VI).	2
2.668-S	Screw, round head, 3.5 diameter x 10 mm long (R. VI), for securing:	
	- insect grille.	4
	- clip for flexible tube.	4
2.756-S	Screw, round head, 3.5 x 9.5 (cruciform slot), for securing duct (R. VI).	1

NUMBER	DESCRIPTION	No. OFF
2.854-S	PC clip with pin, 208 mm long, for securing feed tube on valve (R. VI).	1
2.876-S	Clip, Ligarex, with screw, for securing water outlet tube (R. VI).	1
2.985-S	PC clip, with pin, for holding flexible tube, 438 mm long (R. VI).	2
2.989-S	PC clip with pin, 254 mm long, for securing the water outlet tube on valve (R. VI).	1
89.149	Screw, hex. head, 5 diameter x 18 mm long, for securing upper part of ventilation grille (R. VI).	2
233.400	Link, swivelling, for ventilation shutter (R. IV).	4
585.698	Clip for shutter control cable (R. III).	1
614.020	Clip, Ligarex, with screw, for securing flexible feed tube on radiator (R. VI).	1
615.710	Nut, self-locking, for 4.85 mm screw, securing ventilation grille, bottom (R. VI).	2
619.089	Washer, 5.5 x 20 x 1, for screw securing heating unit (R. III).	3
621.035	Screw, hex. head, 5 diameter x 25 mm long, for securing heating unit on radiator bracket (R. IV).	3
621.062	Screw, hex. head, 5 diameter x 14 mm long (R. III) for securing:	
	- bracket for radiator.	4
	- heating duct.	2
	- heating control.	2
	- ventilation duct.	2
	- guide for deflection shutter lever	4
804.104	Cover, rubber, for stop valve in heating circuit (R. IV).	1

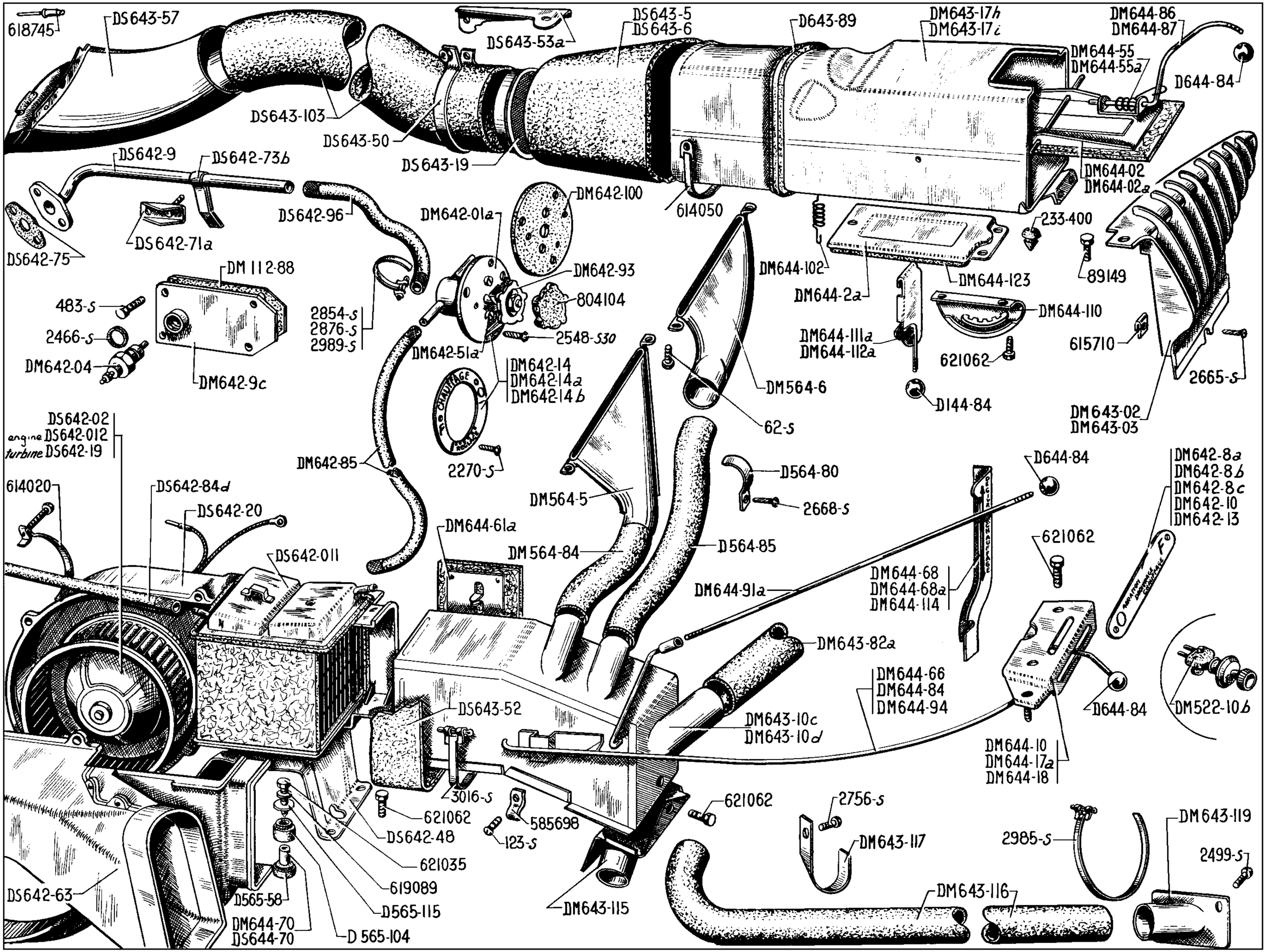
618745
DS643-57
DS643-53a
DS643-5
DS643-6
D643-89
DM643-17h
DM643-17i
DM644-86
DM644-87
DM644-55
DM644-55a
D644-84
DS643-103
DS643-50
DS643-19
DS642-9
DS642-73b
DS642-71a
DS642-75
DS642-96
DM642-100
DM642-01a
614050
DM644-02
DM644-02a
233-400
89149
DM644-102
DM644-123
DM644-2a
DM644-110
DM112-88
483-s
2466-s
DM642-04
DM642-9c
2854-s
2876-s
2989-s
DM642-93
804104
2548-s30
DM642-51a
DM644-111a
DM644-112a
621062
615710
2665-s
DM642-14
DM642-14a
DM642-14b
DM564-6
D144-84
62-s
DM643-02
DM643-03
DS642-02
engine DS642-012
turbine DS642-19
DM642-85
2270-s
D564-80
2668-s
D644-84
DM642-8a
DM642-8b
DM642-8c
DM642-10
DM642-13
614020
DS642-84d
DS642-20
DS642-011
DM644-61a
DM564-5
DM564-84
D564-85
621062
DM644-68
DM644-68a
DM644-114
DM644-91a
DM643-82a
DM644-66
DM644-84
DM644-94
DS643-52
DM643-10c
DM643-10d
D644-84
DM522-10b
DM644-10
DM644-17a
DM644-18
3016-s
621062
585698
123-s
DS642-48
621035
619089
D565-115
D565-58
DM644-70
DS644-70
D 565-104
DS642-63
DM643-115
621062
2756-s
DM643-117
2985-s
DM643-119
2499-s
DM643-116

NUMBER	DESCRIPTION	No. OFF
	DEMISTING **September 1962 – September 1964**	
DM 564-5	Nozzle for warm air distribution, L.H.	1
DM 564-6	Nozzle for warm air distribution, R.H.	1
D 564-80	Clip for securing R.H. tube.	1
DM 564-84	Tube, flexible, 45 x 51 x 65, for connecting L.H. warm air distribution nozzle (R. VI).	1
D 564-85	Tube, flexible, 45 x 51 x 500, for connecting R.H. warm air distribution nozzle (R. VI).	1
62-S	Screw, round head, 4 diameter x 7.5 mm long, for securing warm air distribution nozzle (R. III).	4
2.668-S	Screw, round head, 3.5 diameter x 10 mm long, Parker, for securing R.H. flexible tube (R. VI).	1
	HEATING AND VENTILATION **September 1962 – September 1964**	
DM 112-88	Gasket for plate for thermometer bulb on cylinder head (R. VI).	1
DM 522-10b	Switch for heating, on instrument board (R. VI).	1
D 564-80	Clip for securing R.H. flexible tube to dashboard.	3
D 565-58	Bush, rubber, with shoulder, 12 x 20 x 17 x 6, for screws securing heating unit rear L.H. (R. VI).	1
D 565-104	Bush, rubber, 8 x 20 x 8 for screw securing right-hand front and rear heating unit (R. VI).	4

NUMBER	DESCRIPTION	No. OFF
D 565-115	Washer, cup, for bush securing L.H. rear heating unit (R. VI).	1
DM 642-01a	Regulating valve for heater (R. VI). Until January 1964.	1
DM 642-01b	Regulating valve for heater (R. VI). Since January 1964.	1
DS 642-02	Ducellier heating and ventilation unit (3.216A) (R. VI).	1
DM 642-04	Thermometer bulb (R. VI).	1
DS 642-011	Radiator, heater (R. VI).	1
DS 642-012	Motor, 12 volts (R. VI).	1
DM 642-8a	Indicator plate for control of ventilation, demisting and heating (R. VI). U.S.A.	1
DM 642-8b	Indicator plate for control of ventilation, demisting and heating (R. VI).	1
DM 642-8c	Indicator plate for control of ventilation, demisting and heating (R. VI). LATIN AMERICA	1
DM 642-9c	Plate on cylinder head with welded nut for thermometer bulb connection.	1
DS 642-9	Tube, 20 x 22, with connection for water outlet.	1
DM 642-10	Indicator plate for heating control (R. VI). R.H. steering.	1
DM 642-13	Indicator plate for demisting and heating (R. VI). R.H. steering.	1
DM 642-14	Indicator plate for adjusting heating (R. VI).	1

NUMBER	DESCRIPTION	No. OFF
DM 642-14a	Indicator plate for adjusting heating (R. VI). U.S.A.	1
DM 642-14b	Indicator plate for adjusting heating (R. VI). LATIN AMERICA.	1
DS 642-19	Turbine (R. VI).	1
DS 642-20	Half-casing, motor support, right side (R. VI).	1
DS 642-48	Bracket, rear, for heater unit.	1
DM 642-51a	Screw, round head, 4 x 16.5, for securing the heater valve body on bracket (R. VI).	2
DS 642-63	Half-casing of turbine, left side (R. VI).	1
DS 642-71a	Clip with screw welded for securing bracket for the water outlet tube.	1
DS 642-73b	Clip for water outlet tube.	1
DS 642-75	Joint, oval, for flange on water outlet tube, 2 holes, 5.5 diameter x 38 mm between centres (R. VI).	1
DA 642-84	Flexible tube for water return.	1
DS 642-84d	*Tube, flexible, for water return, 530 mm long. Replaced by DA 642-84.*	1
DM 642-85	Tube, rubber, for feed connection between stop valve and heater radiator of front heater unit.	1
DM 642-93	Hand piece for heater stop valve control (R. VI).	1
DS 942-96	Tube, rubber, for hot water outlet.	1

The numbers underlined indicate new parts which do not appear on the illustration.

NUMBER	DESCRIPTION	No. OFF
DM 642-100	Washer, rubber, for insulating the heater valve, 100 mm diameter x 4 mm thick (R. VI).	1
DS 642-104	Spring for upper fixing of radiator on heater unit (R. VI).	1
DM 643-02	Grille, for ventilator, L.H.	1
DM 643-03	Grille, for ventilator, R.H.	1
DS 643-5	Duct for connecting heater unit to ventilation duct, L.H.	1
DS 643-6	Duct connecting feed and ventilation R.H. (R. VI).	1
DM 643-10c	Duct for hot air distribution. L.H. steering.	1
DM 643-10d	Duct for hot air distribution. R.H. steering.	1
DM 643-17h	Duct for ventilation, with two shutters, L.H.	1
DM 643-17i	Duct for ventilation, with two shutters, R.H.	1
DS 643-19	Insect grille, on air intake duct, front wing.	2
DS 643-50	Clip in form of collar with nut for securing ventilation duct on front wing, R.H.	1
DS 643-52	Tube, flexible, for connection between radiator and distribution duct.	1
DS 643-53a	Clip for securing feed duct on front wing, R.H.	1
DS 643-57	Duct air intake, on front wing, R.H. and L.H.	2
DM 643-82a	Tube, flexible, for heater, R.H. 1.150 m long (R. VI).	1

NUMBER	DESCRIPTION	No. OFF
D 643-89	Packing between heating and ventilation ducts and upper part of instrument board, 590 mm long (R. VI).	As nec.
DS 643-103	Tube, flexible, air feed for ventilation R.H. and L.H. 84 mm long (R. VI).	2
DM 643-115	Connection for heating rear of car, on distribution duct.	1
DM 643-116	Tube, flexible, for rear seat heating, 45 mm diameter x 1500 mm long (R. VI).	1
DM 643-117	Clip holding duct for rear seat heating.	1
DM 643-119	Plate holding duct for rear seat heating.	1
DM 644-02	Shutter for ventilation, L.H.	1
DM 644-02a	Shutter for ventilation, R.H.	1
DM 644-2a	Shutter for ventilation on right and left-hand ducts.	2
DM 644-10	Control for heater, L.H. steering. Until May 1963.	1
DM 644-17a	Control for heater. R.H. steering.	1
DM 644-18	*Control for heating and demisting, R.H. steering. Until May 1963. Replaced by DW 644-18.*	1
DW 644-18	Control for heating and demisting. Since May 1963.	1
DM 644-55	Spring, L.H. for ventilator shutter lever return.	1
DM 644-55a	Spring, R.H. for ventilator shutter lever return.	1
DM 644-61a	Shutter, heating, on front hot air distribution duct.	1

NUMBER	DESCRIPTION	No. OFF
DM 644-66	Cable for operating heater shutter, 755 mm long (R. VI).	1
DM 644-68	Guide for lever operating warm air shutter (R. VI). L.H. steering.	1
DM 644-68a	Guide for lever operating warm air shutter (R. VI). LATIN AMERICA.	1
DM 644-70	Distance piece, 5.5 x 8 x 10.5, for bush securing rear left-hand heater unit (R. VI).	1
DS 644-70	Distance piece, 5.5 x 8 x 16, for securing front and rear right-hand heater unit (R. VI).	2
D 644-84	Knob for lever (R. VI) on:	
	- shutter for heating and ventilation.	3
	- deflecting shutter.	2
DM 644-84	Cable, controlling shutter for heating and demisting, 765 mm long (R. VI). R.H. steering.	1
DM 644-86	Lever, R.H. controlling ventilation shutter.	1
DM 644-87	Lever, L.H. controlling ventilation shutter.	1
DM 644-91a	Lever for controlling shutter for deflection of heating.	1
DM 644-94	Cable for heating shutter control, 685 mm long (R. VI). R.H. steering.	1
DM 644-102	Spring for ventilator shutter return.	2
DM 644-110	Guide for R.H. and L.H. deflection shutter lever.	2

The numbers underlined indicate new parts which do not appear on the illustration.

NUMBER	DESCRIPTION	No. OFF
DM 644-111a	Shutter for ventilation deflector, L. H.	1
DM 644-112a	Shutter for ventilation deflector, R. H.	1
DM 644-114	Guide for control lever on hot air shutter (R. VI). U. S. A.	1
DM 644-123	Gasket for sealing shutter on ventilation duct.	1
123-S	Screw, round head, 5 diameter x 10 mm long, for securing shutter control cable (R. III).	1
483-S	Screw, hex. head, 7 x 15 for securing plate on cylinder head for thermometer bulb connection (R. III).	4
2.270-S	Screw, raised countersunk head, 4 x 14, for securing heater indicator plate (R. VI).	3
2.466-S	Joint, fibre, 18.3 x 24 x 1, for thermometer bulb (R. VI).	1
2.499-S	Screw, raised countersunk head, 3.5 x 9.5 (cruciform slot), for securing the plate holding the duct (R. VI).	2
2.548-S 30	Screw, round head, 5 x 16.5 pointed, (cruciform slot) for securing the valve to the body (R. VI).	3

NUMBER	DESCRIPTION	No. OFF
2.665-S	Screw, round head, 5 x 16, for lower fixing of ventilation grille (R. VI).	2
2.668-S	Screw, round head, 3.5 x 10, for securing the clip of the heater duct on the engine housing (R. VI).	4
2.756-S	Screw, round head, 3.5 x 9.5, (cruciform slot) for securing the duct (R. VI).	1
2.854-S	PC clip with pin, 208 mm long for securing feed tube on valve (R. VI).	1
2.876-S	Clip, Ligarex, for securing the water outlet tube, 287 mm long (R. VI).	1
2.985-S	PC clip, with pin, for holding flexible tube, 438 mm long (R. VI).	2
2.989-S	PC clip with pin, 254 mm long, for securing the water outlet tube on valve.	1
3.016-S	PC clip with pin, for securing the flexible radiator duct to the distribution duct, 870 mm long (R. VI).	1
89.149	Screw, hex. head, 5 x 18, for securing the upper ventilation grille (R. III).	2
89.114	Screw, hex. head, 5 x 25, for securing the heater unit on radiator support bracket (R. III).	3

NUMBER	DESCRIPTION	No. OFF
233.400	Buffer for ventilation shutter (R. IV).	4
585.698	Clip for shutter control cable (R. III).	1
614.020	Clip, Ligarex, with screw, securing feed pipe on radiator (R. VI).	1
614.050	Clip, Ligarex, with screw, securing the ducts on air intake side and insect grille, 720 mm long (R. VI).	4
615.710	Nut, self locking, for 4.85 mm diameter screws for lower fixing of ventilation grille (R. VI).	2
618.745	Rivet (POP) for securing air intake pipe on wing (R. VI).	8
619.089	Washer, 5.5 x 20 x 1, for screws securing heating unit, front and rear, right-hand (R. III).	2
621.035	*Screw, hex. head, 5 x 25, for securing heater unit on radiator bracket (R. IV). Replaced by 89.114.*	3
621.062	Screw, hex. head, 5 diameter x 14 mm long, for securing (R. III):	
	- bracket for radiator.	2
	- heater duct.	2
	- control for heater.	2
	- ventilation duct.	2
	- guide for lever on deflection shutter.	4
804.104	Cover, rubber, for stop valve in heater circuit (R. IV).	1

The numbers underlined indicate new parts which do not appear on the illustration.

NUMBER	DESCRIPTION	No. OFF
	DEMISTING **Since September 1964**	
DW 564-5	Nozzle for demisting the windscreen (R. VI).	1
DW 564-6	Demisting nozzle for glass in front left-hand door (R. VI).	1
DW 564-6a	Nozzle for demisting the glass in the front right-hand door (R. VI).	1
DW 564-60	Sealing strip between demisting nozzle and facia panel, 185 mm long.	1
DW 564-65	Flexible pipe, 29 x 33.5 x 380 for the lateral demisting nozzle, left-hand (R. VI).	1
DW 564-65a	Flexible tube, 29 x 33.5 x 730 for the lateral demisting nozzle, right-hand (R. VI).	1
DW 564-71	Union for the lateral demisting nozzle, left-hand (R. VI).	1
DW 564-71a	Union for the lateral demisting nozzle, right-hand (R. VI).	1
DW 564-80	Finishing strip for the demisting nozzle on the facia panel, left-hand, 220 mm long.	1
DW 564-80a	Finishing strip for the demisting nozzle on the dashboard, right-hand, 215 mm long.	1
DW 564-84	Flexible tube connecting the distribution duct and the nozzle for the windscreen, 75 mm diameter x 88 mm long (R. VI).	1

NUMBER	DESCRIPTION	No. OFF
DW 564-114	Union, 31 x 33 x 45, for flexible pipe of right-hand lateral warm air nozzle and demisting nozzle.	1
2.499-S	Screw, round head, Parker, 3.5 x 9.5 for securing the demisting nozzle on the side glass (R. VI).	2
615.748	Nut, clips, for screws 3.5 mm for connecting the nozzle to the union (R. VI).	2
621.509	Screw, raised countersunk head, 3.5 x 15, cruciform slot, for assembling the demisting nozzle to the union (R. VI).	2
	HEATING AND VENTILATION **Since September 1964**	
D 564-80	Clip securing flexible heater pipe, front, right-hand, on engine housing.	3
D 565-58	Bush, rubber, 12 x 20 x 17 x 6 for screws securing rear left-hand heater group on bracket (R. VI).	1
D 565-104	Bush, rubber, 8 x 20 x 8 for securing front and rear heater group.	4
D 565-115	Washer, cupped, for securing left-hand bush on heater group (R. VI).	1
DW 642-01a	Cock for regulating heating, without button (R. VI).	1
DS 642-02	Heater and ventilator group, Ducellier (3216.A) (R. VI).	1

NUMBER	DESCRIPTION	No. OFF
DM 642-04	Thermometer bulb (R. VI).	1
DS 642-011	Radiator, heater (R. VI).	1
DS 642-012	Motor, 12 volts (R. VI).	1
DW 642-8	Indicator plate for control of ventilation, demisting, and heating (R. VI).	1
DS 642-9	Tube for heater outlet.	1
DW 642-14	Indicator plate for adjusting heating (R. VI).	1
DW 642-15	Disc marked with opening position of heater cock (R. VI).	1
DW 642-19	Turbine (R. VI).	1
DS 642-20	Half-casing, motor support, right-hand side (R. VI).	1
DS 642-48	Bracket, rear, for heating and ventilation unit.	1
DM 642-51a	Screw, round head, 4 x 16.5, for securing body of heater cock on bracket.	2
DW 642-53	Stop for rotary plug of heater cock (R. VI).	1
DS 642-63	Half-housing for turbine, left-hand side (R. VI).	1
DS 642-71a	Plate with screw welded for bracket of water outlet.	1
DS 642-73b	Bracket for water outlet pipe.	1
DS 642-75	Oval joint, for flange of water outlet tube, 2 holes 5.5 x 38 mm between centres (R. VI).	1

NUMBER	DESCRIPTION	No. OFF
DM 642-78	Clip securing feed pipe to cock on radiator of heater group to dash-board (R. VI).	1
DS 642-84d	Flexible pipe for water return, 530 mm long.	1
DM 642-85	Tube, rubber, for feed between heater group radiator and cock.	1
DM 642-93	Hand piece for heater stop cock control (R. VI).	1
DS 642-96	Flexible pipe for hot water outlet.	1
DM 642-100	Washer, rubber, insulating heater cock, diameter 100 mm x thick-ness 4 mm (R. VI).	1
DS 642-104	Spring for top of heater radiator group (R. VI).	1
DW 643-02b	Ventilation grille on ventilation duct (R. VI).	2
DS 643-2	Duct for warm air distribution with shutter control.	1
DS 643-5	Flexible pipe joining heater group to ventilation duct, left-hand.	1
DS 643-6	Duct between feed ducts and ventil-ation ducts, right-hand (R. VI).	1
DM 643-11a	Ventilation grille on facia panel, left-hand. L.H. steering.	1
DM 643-11b	Grille, ventilation, on facia panel, right-hand. R.H. steering.	1
DS 643-17c	Ventilation duct, left-hand.	1
DW 643-17b	Ventilation duct, right-hand.	1

NUMBER	DESCRIPTION	No. OFF
DS 643-19	Insect grille on air inlet duct on front wing.	2
DS 643-50	Clip forming collar, with welded nut securing ventilation duct on front wing, right-hand.	1
DS 643-52	Flexible pipe between heater group radiator and distribution duct.	1
DS 643-53a	Clip securing feed duct on front wing, right-hand.	1
DS 643-57	Duct (steel), for air intake on front wing, right and left-hand.	2
DS 643-67	Clip forming collar for securing heater duct, right-hand, with welded nut.	1
DM 643-82a	Flexible pipe for front heating, right-hand, 1150 mm long (R. VI).	1
D 643-89	Sealing strip between distribution duct and upper part of instrument board, 590 mm long (R. VI).	As nec.
DS 643-103	Flexible air feed pipe for ventilation right and left-hand, 840 mm long (R. VI).	2
DW 643-115	Outlets for heating rear seats on distribution duct.	1
DM 643-116	Flexible pipe for heating in rear seats, 45 mm diameter x 1500 mm long (R. VI).	1
DM 643-117a	Clip securing heater duct to rear seats.	1
DW 643-119	Clip for heater duct.	1

NUMBER	DESCRIPTION	No. OFF
DM 643-134	Nozzle for warm air distribution duct, left-hand (rear heating fitting).	1
DW 644-02	Ventilation shutter, upper, in duct.	2
DW 644-2	Ventilation shutter, lower, under duct.	2
DW 644-17	Control for heater shutter.	1
DW 644-18	Control for direction of heat shutter.	1
DW 644-55	Spring, 5.5 x 20, for push-button on levers controlling ventilation shutters on duct.	4
DM 644-61a	Shutter on heating distribution duct, front, warm air.	1
DM 644-70	Distance piece, 5.5 x 8 x 10.5, for bush securing rear left-hand heater group on bracket (R. VI).	1
DS 644-70	Distance piece, 5.5 x 8 x 16, for screw securing front and rear right-hand heater group (R. VI).	2
DW 644-72	Control cable for ventilation shutter, 225 mm long (R. VI).	2
DM 644-84	Cable for heat direction control shutter, 765 mm long (R. VI).	1
DW 644-84	Knob on control levers for heater shutters (R. VI).	2
DW 644-87	Control lever for ventilation shutters on duct.	4
DW 644-92	Control button on ventilation lever on facia panel (R. VI).	4

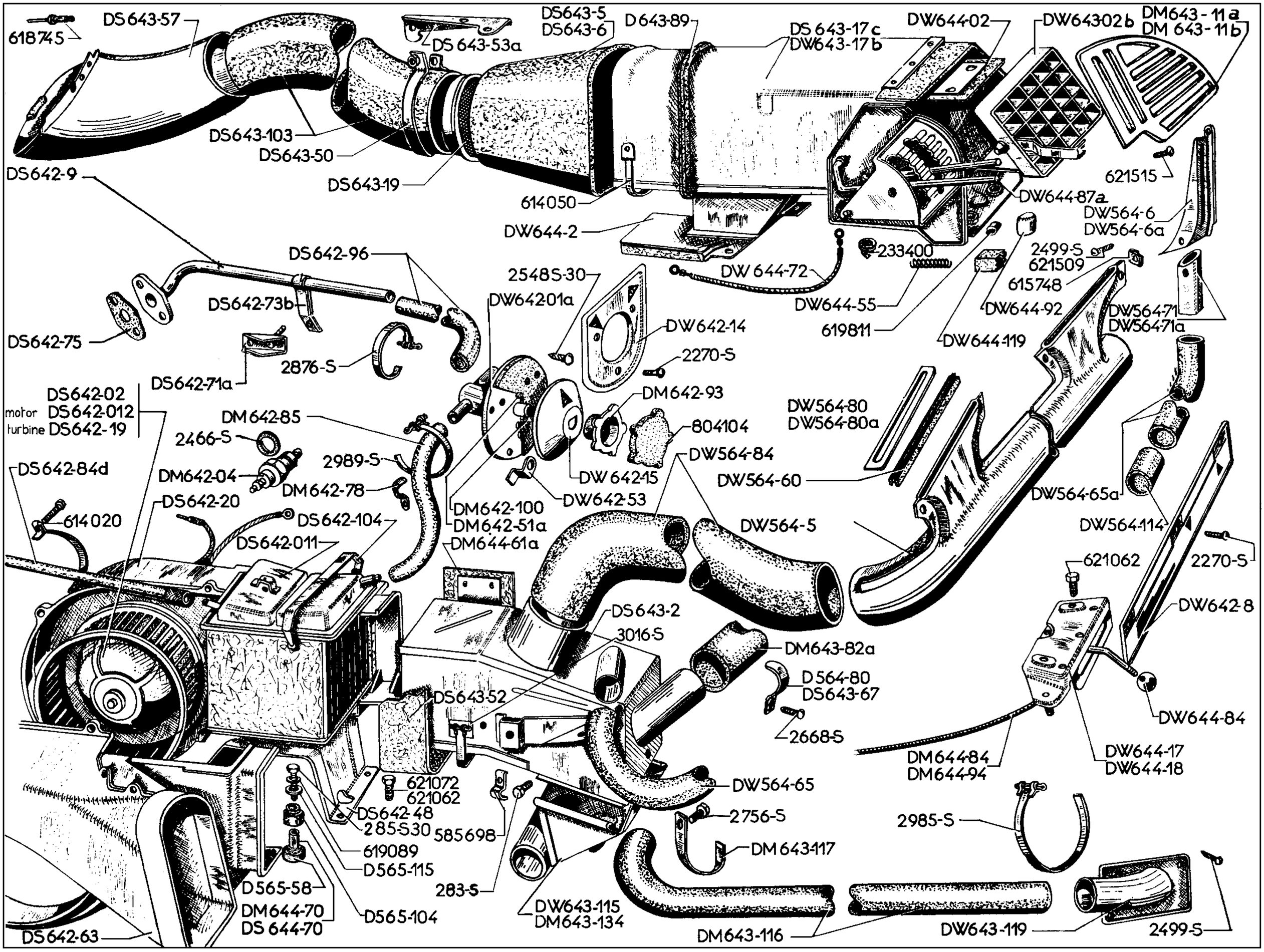
618745
DS643-57
DS643-5
DS643-6
D643-89
DS643-53a
DS643-17c
DW643-17b
DW644-02
DW643-02b
DM643-11a
DM643-11b
DS643-103
DS643-50
DS643-19
DS642-9
614050
DW644-2
621515
DW644-87a
DW564-6
DW564-6a
233400
2499-S
621509
615748
DW644-72
DS642-96
2548S-30
DW642-01a
DS642-73b
DW644-55
DW644-92
DW564-71
DW564-71a
619811
DW644-119
DS642-75
DW642-14
2270-S
2876-S
DS642-71a
DS642-02
motor DS642-012
turbine DS642-19
DM642-93
DM642-85
DW564-80
DW564-80a
804104
2466-S
2989-S
DW564-84
DS642-84d
DM642-04
DM642-78
DW642-15
DW564-60
DW564-65a
DW642-53
DM642-100
DM642-51a
DS642-20
DS642-104
614020
DW564-5
DW564-114
DS642-011
DM644-61a
621062
2270-S
DS643-2
DW642-8
3016-S
DM643-82a
D564-80
DS643-67
DS643-52
DW644-84
2668-S
DM644-84
DM644-94
DW644-17
DW644-18
621072
621062
DW564-65
DS642-48
285-S30
585698
2756-S
2985-S
619089
DM643-117
D565-115
283-S
D565-58
DM644-70
DS 644-70
D565-104
DW643-115
DM643-134
DM643-116
DW643-119
2499-S
DS642-63

NUMBER	DESCRIPTION	No. OFF
	DEMISTING **Since September 1964**	
DW 564-5	Nozzle for demisting the windscreen (R. VI).	1
DW 564-6	Demisting nozzle for glass in front left-hand door (R. VI).	1
DW 564-6a	Nozzle for demisting the glass in the front right-hand door (R. VI).	1
DW 564-60	Sealing strip between demisting nozzle and facia panel, 185 mm long.	1
DW 564-65	*Flexible pipe, 29 x 33.5 x 380 for the lateral demisting nozzle, left-hand (R. VI). Replaced by DW 564-65b; order in addition: 1-DW 564-71b.*	1
DW 564-65a	Flexible tube, 29 x 33.5 x 730 for the lateral demisting nozzle, right-hand (R. VI).	1
DW 564-71	Union for the lateral demisting nozzle, left-hand (R. VI)	1
DW 564-71a	Union for the lateral demisting nozzle, right-hand (R. VI).	1
DW 564-80	Finishing strip for the demisting nozzle on the facia panel, left-hand, 220 mm long.	1
DW 564-80a	Finishing strip for the demisting nozzle on the dashboard, right-hand, 215 mm long.	1
DW 564-84	Flexible tube connecting the distribution duct and the nozzle for the windscreen, 75 mm diameter x 88 mm long (R. VI).	1

NUMBER	DESCRIPTION	No. OFF
DW 564-114	Union, 31 x 33 x 45, for flexible pipe of right-hand lateral warm air nozzle and demisting nozzle.	1
2.499-S	Screw, round head, Parker, 3.5 x 9.5 for securing the demisting nozzle on the side glass (R. VI).	2
615.748	Nut, clips, for screws 3.5 mm for connecting the nozzle to the union (R. VI).	2
621.509	Screw, raised countersunk head, 3.5 x 15, cruciform slot, for assembling the demisting nozzle to the union (R. VI).	2
	HEATING AND VENTILATION **Since September 1964**	
D 564-80	Clip securing flexible heater pipe, front, right-hand, on engine housing.	3
D 565-58	Bush, rubber, 12 x 20 x 17 x 6 for screws securing rear left-hand heater group on bracket (R. VI).	1
D 565-104	Bush, rubber, 8 x 20 x 8 for securing front and rear heater group.	4
D 565-115	Washer, cupped, for securing left-hand bush on heater group (R. VI).	1
DW 642-01a	Cock for regulating heating, without button (R. VI).	1
DS 642-02	Heater and ventilator group, Ducellier (3216. A) (R. VI).	1

NUMBER	DESCRIPTION	No. OFF
DM 642-04	Thermometer bulb (R. VI).	1
DS 642-011	Radiator, heater (R. VI).	1
DS 642-012	Motor, 12 volts (R. VI).	1
DW 642-8	Indicator plate for control of ventilation, demisting, and heating (R. VI).	1
DS 642-9	Tube for heater outlet.	1
DW 642-14	Indicator plate for adjusting heating (R. VI).	1
DW 642-15	Disc marked with opening position of heater cock (R. VI).	1
DS 642-19	Turbine (R. VI).	1
DS 642-20	Half-casing, motor support, right-hand side (R. VI).	1
DS 642-48	Bracket, rear, for heating and ventilation unit.	1
DM 642-51a	Screw, round head, 4 x 16.5, for securing body of heater cock on bracket.	2
DW 642-53	Stop for rotary plug of heater cock (R. VI).	1
DS 642-63	Half-housing for turbine, left-hand side (R. VI).	1
DS 642-71a	Plate with screw welded for bracket of water outlet.	1
DS 642-73b	Bracket for water outlet pipe.	1
DS 642-75	Oval joint, for flange of water outlet tube, 2 holes 5.5 x 38 mm between centres (R. VI).	1

NUMBER	DESCRIPTION	No. OFF
DM 642-78	Clip securing feed pipe to cock on radiator of heater group to dash-board (R. VI).	1
DS 642-84d	Flexible pipe for water return, 530 mm long.	1
DM 642-85	Tube, rubber, for feed between heater group radiator and cock.	1
DM 642-93	Hand piece for heater stop cock control (R. VI).	1
DS 642-96	Flexible pipe for hot water outlet.	1
DM 642-100	Washer, rubber, insulating heater cock, diameter 100 mm x thick-ness 4 mm (R. VI).	1
DS 642-104	Spring for top of heater radiator group (R. VI).	1
DW 643-02b	Ventilation grille on ventilation duct (R. VI).	2
DS 643-2	Duct for warm air distribution with shutter control.	1
DS 643-5	Flexible pipe joining heater group to ventilation duct, left-hand.	1
DS 643-6	Duct between feed ducts and ventil-ation ducts, right-hand (R. VI).	1
DM 643-11a	Ventilation grille on facia panel, left-hand. L.H. steering.	1
DM 643-11b	Grille, ventilation, on facia panel, right-hand. R.H. steering.	1
DS 643-17c	Ventilation duct, left-hand.	1
DW 643-17b	Ventilation duct, right-hand.	1

NUMBER	DESCRIPTION	No. OFF
DS 643-19	Insect grille on air inlet duct on front wing.	2
DS 643-50	Clip forming collar, with welded nut securing ventilation duct on front wing, right-hand.	1
DS 643-52	Flexible pipe between heater group radiator and distribution duct.	1
DS 643-53a	Clip securing feed duct on front wing, right-hand.	1
DS 643-57	Duct (steel), for air intake on front wing, right and left-hand.	2
DS 643-67	Clip forming collar for securing heater duct, right-hand, with welded nut.	1
DM 643-82a	Flexible pipe for front heating, right-hand, 1150 mm long (R. VI).	1
D 643-89	Sealing strip between distribution duct and upper part of instrument board, 590 mm long (R. VI).	As nec.
DS 643-103	Flexible air feed pipe for ventilation right and left-hand, 840 mm long (R. VI).	2
DW 643-115	Outlets for heating rear seats on distribution duct.	1
DM 643-116	Flexible pipe for heating in rear seats, 45 mm diameter x 1500 mm long (R. VI).	1
DM 643-117a	Clip securing heater duct to rear seats.	1
DW 643-119	Clip for heater duct.	1

NUMBER	DESCRIPTION	No. OFF
DM 643-134	Nozzle for warm air distribution duct, left-hand (rear heating fitting).	1
DW 644-02	Ventilation shutter, upper, in duct.	2
DW 644-2	Ventilation shutter, lower, under duct.	2
DW 644-17	Control for heater shutter.	1
DW 644-18	Control for direction of heat shutter.	1
DW 644-55	Spring, 5.5 x 20, for push-button on levers controlling ventilation shutters on duct.	4
DM 644-61a	Shutter on heating distribution duct, front, warm air.	1
DM 644-70	Distance piece, 5.5 x 8 x 10.5, for bush securing rear left-hand heater group on bracket (R. VI).	1
DS 644-70	Distance piece, 5.5 x 8 x 16, for screw securing front and rear right-hand heater group (R. VI).	2
DW 644-72	Control cable for ventilation shutter, 225 mm long (R. VI).	2
DM 644-84	Cable for heat direction control shutter, 765 mm long (R. VI).	1
DW 644-84	Knob on control levers for heater shutters (R. VI).	2
DW 644-87	Control lever for ventilation shutters on duct.	4
DW 644-92	Control button on ventilation lever on facia panel (R. VI).	4

NUMBER	DESCRIPTION	No. OFF
DM 644-94	Control cable for heater shutter, 685 mm long (R. VI).	1
DW 644-119	Push control for vanes on ventilation duct (R. VI).	4
283-S	Screw, hex. head, 5 x 13, securing trunnion on shutter control cable (R. III).	2
285-S 30	Screw, hex. head, 5 x 25, securing heater group on bracket (R. III).	3
494-S	Screw, hex. head, 7 x 42, for securing heater outlet tube (R.III).	2
2.270-S	Screw, raised countersunk head, 4 x 14, for securing heater indicator plate (R. VI).	3
2.466-S	Joint, fibre, 18.3 x 24 x 1 for thermometer bulb (R. VI).	1
2.499-S	Screw, raised countersunk head, 3.5 x 9.5 (cruciform slot) for securing the plate holding the duct (R. VI).	2
2.548-S 30	Screw, round head, 5 x 16.5 pointed, for securing (R. VI):	
	- heater cock.	3
	- ventilation ducts.	2
2.668-S	Screw, round head, 3.5 x 10, for securing clip for heater duct on engine housing (R. VI).	4

NUMBER	DESCRIPTION	No. OFF
2.756-S	Screw, round head, 3.5 x 9.5, cruciform slot, securing clip for heater duct in the rear seats (R. VI).	1
2.876-S	Collar securing tube of water outlet, 287 mm long (R. VI).	1
2.985-S	Collar securing heater duct to the rear seats, 438 mm long (R. VI).	2
2.989-S	Collar securing the outlet and feed pipes on the cock, 245 mm long (R. VI).	2
3.016-S	Collar, securing the flexible pipe between the radiator and distribution duct, 870 mm long (R. VI).	1
233.400	Hinge for ventilation shutter (R.VI).	4
585.698	Trunnion for control cable of shutter (R. III).	2
614.020	Collar securing water return tube, 113 mm long (R. VI).	1

NUMBER	DESCRIPTION	No. OFF
614.050	Collar, Ligarex, screwed, securing the ducts, air intake side and insect grille, 720 mm long (R. VI).	4
618.745	Rivet, POP, for securing the air inlet duct on the front wing (R. VI).	8
619.089	Washer, 5.5 x 20 x 1 for screws securing front and rear right-hand heater group (R. III).	2
621.062	Screw, hex. head, 5 x 14, for securing (R. III):	
	- clip for duct on front right-hand wing.	3
	- distribution duct.	2
	- shutter controls.	4
	- ventilation ducts.	2
621.072	Screw, hex. head, 5 x 16, for securing rear support for the heater group (R. VI).	4
619.811	Clips securing the control buttons on ventilation levers on facia panel (R. VI).	4
621.515	Screw, Parker, for securing the ventilation grille on the facia panel (R. VI).	2
804.104	Cover, rubber, for heater cock (R. VI).	1

NUMBER	DESCRIPTION	No. OFF
	VENTILATION BY BLOWER RIGHT-HAND Since January 1963	
DM 522-10b	Switch for blower, on instrument board (R. VI).	1
DM 641-20	Half bearing, motor end (R. VI).	1
DM 641-21	Half bearing, turbine end (R. VI).	1
DM 641-012	Motor, 12 volts (R. VI).	1
DM 641-0	Blower for air, Ducellier (R. VI).	1
2.334-S	Washer, shakeproof, 5.2 x 9.4, for screws securing the blower on the body (R. VI).	3
DM 641-22	Bracket (R. VI).	1
DM 641-19	Turbine (R. VI).	1
295-S 30	Screw, hex. head, pointed, 5 x 16, for securing the blower on the body (R. III).	3
	HEATING FRONT RIGHT-HAND FOR REAR SEATS Since January 1963	
D 565-58	Bush, rubber, shouldered, 12 x 20 x 17 x 6, for the screws securing the unit (R. VI).	3
D 565-104	Bush, rubber, 8 x 20 x 8, for screws securing the unit. Until February 1965. Since February 1965.	3 6

NUMBER	DESCRIPTION	No. OFF
DM 642-21	Casing radiator support (R. VI). Until February 1965.	1
DB 643-104	Nozzle for heating to rear seats. BREAK, CONFORT.	1
D 334-204	Clip holding feed tubes.	1
614.020	Clip, Ligarex, with screw, for securing the water feed and return tubes (R. VI).	8
DM 522-10b	Switch for unit, on instrument board.	1
DA 643-1	Heater duct on sidemember, R.H. side (R. VI). EXCEPT FAMILY TYPE.	1
DF 643-1	Heater duct on sidemember, R.H. side (R. VI). FAMILY TYPE.	1
DF 643-2	*Duct for distribution of warm air. L.H. Until September 1964. Replaced by DM 643-10c; order in addition: 1-DF 643-64 (R. VI).*	1
DM 643-10c	Duct for warm air distribution, left-hand. Until September 1964.	1
DS 643-2	Duct for warm air distribution, left-hand. Since September 1964.	1
DF 643-4	Duct for distribution of warm air, R.H.	1
DA 643-45	Duct, flexible, for heating to rear seats. BREAK, LUXE and AMBULANCE.	1
DB 643-82	Duct, flexible, for heating to rear seats (R. VI). BREAK, CONFORT.	1
DM 643-137	Duct, flexible, connecting unit to distribution duct.	1
D 642-82	Backplate for securing the sealing plate.	2

NUMBER	DESCRIPTION	No. OFF
DS 642-20	Half bearing motor support (R. VI). Since February 1965.	1
HY 642-23	Half bearing, turbine end (R. VI). Since February 1965.	1
DM 644-70	Distance piece, 5.5 x 8 x 10.5, for securing unit. Until February 1965.	3
DS 644-70	Distance piece, 5.5 x 8 x 10.5, for securing unit (R. VI). Since February 1965.	3
2.319-S	Nut, hex., 5x75, for screws securing the unit to support panel (R. III).	3
DF 642-81	Angle bracket, L.H. for securing unit.	1
DW 642-02	Heater unit, Ducellier, 3.215B (R. VI). Until February 1965.	1
HY 642-02	Heater unit, Ducellier, (3218A) (R. VI). Since February 1965.	1
DS 642-012	Motor, 12 volts, for unit (R. VI).	1
DF 643-64	Plug, rubber, on distribution duct, L.H. (R. VI).	1
DA 643-117	*Clip for securing flexible ducts to rear seats. BREAK, LUXE and AMBULANCE. No longer supplied.*	3
D 642-81	Sealing rubber for feed pipes on engine housing.	2
DM 642-78	Clip for securing feed tubes on scuttle (R. VI).	4
DM 642-011	Radiator for unit (R. VI). Until February 1965.	1

NUMBER	DESCRIPTION	No. OFF
DS 642-011	Radiator for unit (R. VI). Since February 1965.	1
DF 643-138	Distributor, warm air, to rear seats, L.H. CONFORT. U.S.A.	1
DS 642-104	Spring for upper fixing of radiator of unit, (R. VI). Since February 1965.	1
3.234-S	Washer, cupped, 6 mm for screws securing heating duct on R.H. sidemember. EXCEPT FAMILY TYPE.	5
	- FAMILY TYPE.	8
619.089	Washer, 5.5 x 20 x 1 for screws securing unit. Since February 1965.	3
D 565-115	Washer, cupped, for bush securing the unit (R. VI).	3
DM 642-20a	Bracket for motor (R. VI).	1

NUMBER	DESCRIPTION	No. OFF
DF 642-50	Heater support panel, metal, under instrument panel, R.H. securing screws 20 mm long. Until February 1965.	1
DF 642-50a	Heater unit support panel, bakelite, under dashboard, right-hand. Since February 1965.	1
DF 642-79	Tube, flexible, albowed, 13.5 x 20.5, between feed pipe and radiator (R. VI).	2
DF 642-80	Tube, metal, 12 x 14 x 45, for flexible feed tubes.	2
DF 642-85	Tube, flexible, 13.5 x 21.5 x 1,700 connecting front left-hand unit to front right-hand unit.	1
DF 642-87	Tube, flexible, 13.5 x 21.5 x 1,900, for water return on right-hand unit.	1

NUMBER	DESCRIPTION	No. OFF
DS 642-19	Turbine (R. VI).	1
2.499-S	Screw, Parker, 3.5 x 9.5, for securing distributor of warm air to rear seats, L.H. (R. VI). CONFORT. U.S.A.	4
2.508-S	Screw, raised countersunk head, 4.85 x 16, for securing (R. VI):	
	- support panel with unit on sidemember.	2
	- heater duct on right-hand sidemember.	
	EXCEPT FAMILY TYPE.	5
	FAMILY TYPE.	8
2.665-S	Screw, Parker, round head, 5 x 16, for securing clips holding tubes (R. VI).	3
2.668-S	Screw, Parker, 3.5 x 16, for securing backplate (R. VI).	8
2.756-S	Screw, Parker, 3 x 10, for heater nozzle to rear seats (R. VI). BREAK, CONFORT.	3
DM 642-22	Turbine volute (R. VI).	1

NUMBER	DESCRIPTION	No. OFF
	WHEEL ACCESSORIES	
DS 622-7	Wheel change stand.	1
DS 622-55	*Spanner for stand with tool for removing wheel embellisher. Replaced by DX 622-55.*	1
DS 621-3	Tool for removing wheel cap.	1
D 622-106	Disc on stand spanner (R. VI).	1
DM 416-98	Pin for securing wheel embellisher.	15
DM 854-3a	Wheel embellisher, 192 mm diameter. Until February 1963.	4
DM 854-3b	Wheel embellisher, 192 mm diameter. Since February 1963.	4
392.629	*Wheel balance weight, 30 mm long (R. VI). Until January 1962. Replaced by DS 416-80a.*	As nec.
392.630	*Wheel balance weight, 35 mm long (R. VI). Until January 1962. Replaced by DS 416-80c.*	As nec.
392.631	*Wheel balance weight, 55 mm long (R. VI). Until January 1962. No longer supplied.*	As nec.
DS 416-80a	Wheel balance weight, 20 grammes (R. VI). January 1962 - October 1962.	As nec.
DS 416-80b	Wheel balance weight, 30 grammes (R. VI). January 1962 - October 1962.	As nec.
DS 416-80c	Wheel balance weight, 40 grammes (R. VI). January 1962 - October 1962.	As nec.
DS 416-80e	Wheel balance weight, 60 grammes (R. VI). January 1962 - October 1962.	As nec.
DM 416-80a	Wheel balance weight, 16.5 grammes (R. VI). Since October 1962.	As nec.
DM 416-80b	Wheel balance weight, 26.5 grammes (R. VI). Since October 1962.	As nec.
DM 416-80c	Wheel balance weight, 36.5 grammes (R. VI). Since October 1962.	As nec.
DM 416-80d	*Wheel balance weight, 46.5 grammes (R. VI). Since October 1962. No longer supplied.*	As nec.
DM 416-80e	Wheel balance weight, 56.5 grammes (R. VI). Since October 1962.	As nec.
392.632	Spring for wheel balance weight (R. VI). Until January 1962.	As nec.
DM 416-85	Spring for wheel balance weight (R. VI). Since October 1962.	As nec.
D 622-4	*Strap for securing spare wheel. Until September 1962. Replaced by DS 622-4.*	1
DS 622-4	Strap for securing spare wheel. Since September 1962.	1
D 622-6	Strap, fixed, for securing spare wheel.	1
DS 622-99	Bracket, rear, for spare wheel. Until September 1962.	1
DS 622-97c	Bracket for spare wheel. Since September 1962.	1
483-S	Screw, hex. head, 7 x 15, for securing spare wheel bracket (R. III).	2
	TOOLS	
DS 251-2	Spindle with pin for starting handle. Until March 1962.	1
DS 251-2a	Spindle with pin for starting handle. Since March 1962.	1
DS 625-96a	Strap for securing oil-can. Until September 1962.	1
DS 621-1	Spanner for sparking plug (R. VI).	1
621.951	Ring spanner, 12 x 14 (R. VI).	1
650.139	Spanner, closed end, 12 sided (R. VI).	1
650.147	Spanner, double ended, 8 x 10 (R. VI).	1
650.232	Spanner, double ended, 7 x 9 (R. VI).	1
D 251-1	Starting handle	1
648.522	*Universal pliers (R. VI). No longer supplied.*	1
D 251-4a	*Extension for starting handle, 25 mm diameter x 595 mm long. Until June 1957. Replaced by DS 251-4e; order in addition: 1-DS 251-101.*	1
DS 251-4a	*Extension for starting handle, 25 mm diameter x 615 mm long. June 1957 - September 1962. Replaced by DS 251-4e; order in addition: 1-DS 251-101.*	1
DS 251-4c	*Extension for starting handle. September 1962 - October 1963. Replaced by DS 251-4e.*	1
DS 251-4e	Extension for starting handle. Since October 1963.	1
DS 251-101	Bracket for starting handle. October 1963 - July 1965.	1
650.137	Screwdriver (R. VI).	1

NUMBER	DESCRIPTION	TYPE	REMARKS
	NOTE - The bodies are supplied without side doors, rear doors, bonnet, roof.		
DB 8-05	Body, gear control bracket on left-hand sidemember (suitable for 2 fold-up seats). L.H. steering.	AMBULANCE LUXE CONFORT COMMERCIAL	Until September 1962.
DB 8-05a	Body, gear control bracket on right-hand sidemember (suitable for 2 fold-up seats). R.H. steering.	LUXE CONFORT	Until September 1962.
DF 8-05	Body, gear control bracket on left-hand sidemember (suitable for 3 fold-up seats). L.H. steering.	FAMILY TYPE	Until September 1962.
DB 8-05g	Body, gear control bracket on right-hand sidemember, exhaust silencer under front seats, (suitable for 2 fold-up seats). R.H. steering.	LUXE CONFORT	September 1962 - September 1964.
DB 8-05j	Body, fixing of clutch pedal gear by 3 screws. L.H. steering.	AMBULANCE LUXE CONFORT COMMERCIAL	June 1964-September 1964. Replaces type fitted September 1962-June 1964. (See Note MR 4381-140).
DF 8-05h	Body, fixing of clutch pedal gear by 3 screws. L.H. steering.	FAMILY TYPE	June 1964-September 1964. Replaces type fitted September 1962-June 1964. (See note MR 4381-140).
DB 8-05h	Body, centres for windscreen wiper spindle fixing 556 mm. L.H. steering.	AMBULANCE LUXE CONFORT COMMERCIAL	September 1964 - July 1965.
DB 8-05i	Body, centres for windscreen wiper spindle fixing 556 mm. R.H. steering.	AMBULANCE LUXE CONFORT COMMERCIAL	September 1964 - July 1965.
DF 8-05f	Body, centres for windscreen wiper spindle fixing 556 mm. L.H. steering.	FAMILY TYPE	September 1964 - July 1965.
DF 8-05g	Body, centres for windscreen wiper spindle fixing 556 mm. R.H. steering.	FAMILY TYPE	September 1964 - July 1965.
DB 8-05d	Body, 2 slots 52 mm on sidemember, left-hand. L.H. steering.	AMBULANCE CONFORT COMMERCIAL	Since July 1965.
DB 8-05k	Body, 1 slot 80 mm on sidemember, right-hand. R.H. steering.	AMBULANCE CONFORT COMMERCIAL	Since July 1965.
DB 8-05b	Body, 2 slots 52 mm on sidemember, left-hand. L.H. steering.	FAMILY TYPE	Since July 1965.
DB 8-05i	Body, 1 slot 80 mm on sidemember, right-hand. R.H. steering.	FAMILY TYPE	Since July 1965.

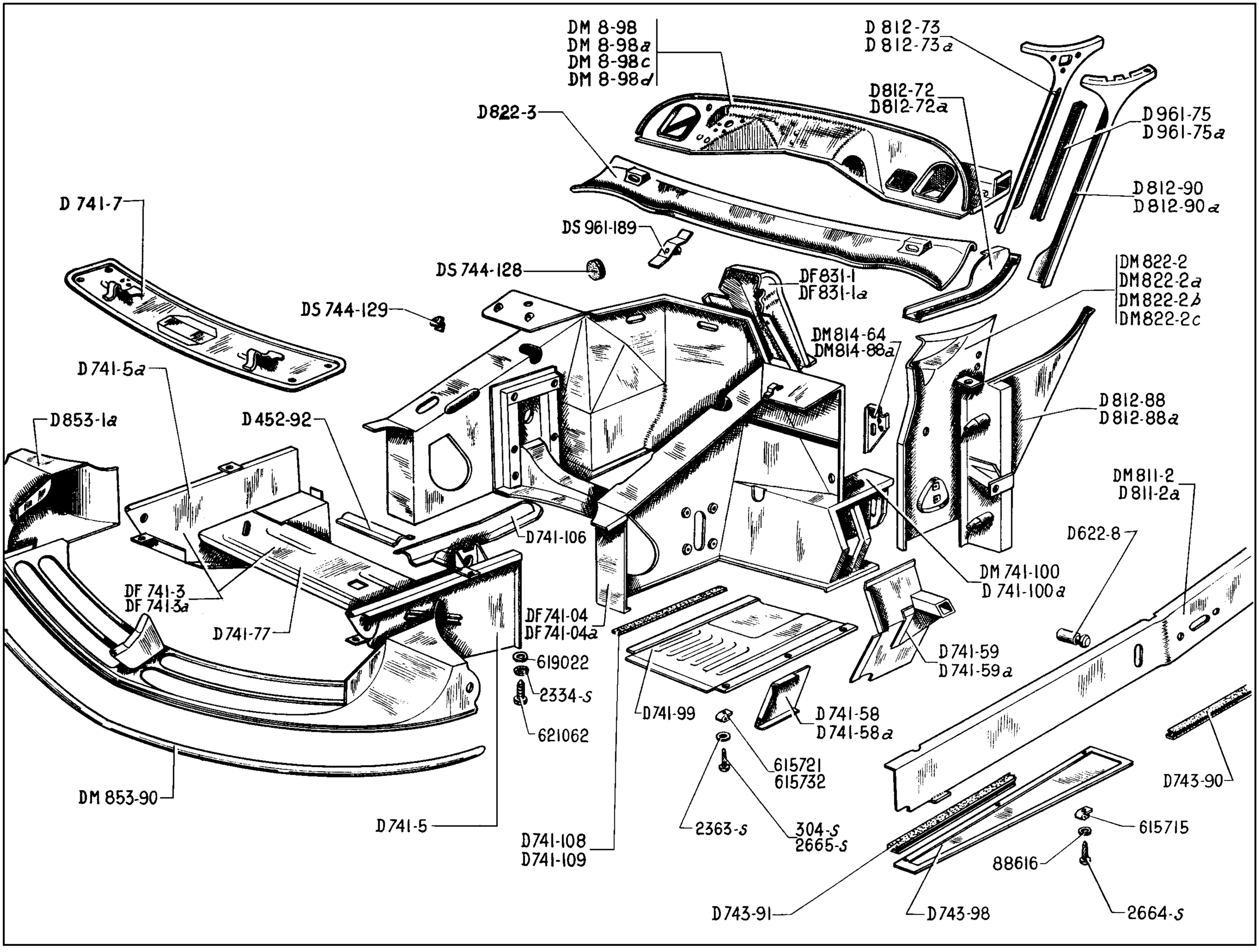
DM 8-98
DM 8-98a
DM 8-98c
DM 8-98d
D 812-73
D 812-73a
D822-3
D812-72
D812-72a
D961-75
D961-75a
D 741-7
D812-90
D812-90a
DS 961-189
DS 744-128
DF831-1
DF831-1a
DM822-2
DM822-2a
DM822-2b
DM822-2c
DS 744-129
DM814-64
DM814-88a
D741-5a
D812-88
D812-88a
D853-1a
D452-92
DM811-2
D811-2a
D741-106
D622-8
DM 741-100
D 741-100a
DF 741-3
DF 741-3a
D741-77
DF741-04
DF741-04a
619022
D741-59
D741-59a
2334-s
D741-99
D741-58
D741-58a
621062
615721
615732
D743-90
DM 853-90
D741-5
2363-s
304-s
2665-s
615715
D741-108
D741-109
88616
D743-91
D743-98
2664-s

NUMBER	DESCRIPTION	No. OFF
	Until September 1962	
DM 8-98	*Panel, upper, with scuttle panel and cross piece, L.H. steering. Until August 1961. Replaced by DM 8-98c.*	1
DM 8-98a	Panel, upper, with scuttle panel and cross piece, R.H. steering. Until August 1961.	1
DM 8-98c	Panel, upper, with scuttle panel and cross piece, 2 screws for securing relay for accelerator control, L.H. steering. Since August 1961.	1
DM 8-98d	*Panel, upper, with scuttle panel and cross piece, 2 screws for securing relay for accelerator control, R.H. steering. Since August 1961. No longer supplied.*	1
D 452-92	Crossmember supports for brake cooling ducts.	2
D 622-8	Pin with shoulder for bottom sidemembers.	2
DF 741-04	Caisson, front assembly, 50 mm diameter hole, gear control bearing end. L.H. steering.	1
DF 741-04a	Caisson, front assembly, 50 mm diameter hole, gear control bearing end, R.H. steering.	1
DF 741-3	Caisson, front assembly (front end), with bracket for gear change control bearing, L.H. steering.	1
DF 741-3a	Caisson, front assembly (front end) with bracket for gear change control bearing. R.H. steering.	1
D 741-5	Sidemember, front, front assembly, L.H.	1
D 741-5a	Sidemember, front, front assembly, R.H.	1

NUMBER	DESCRIPTION	No. OFF
D 741-7	Crossmember, front, for spare wheel.	1
D 741-58	Closing panel for front body sidemember, L.H.	1
D 741-58a	Closing panel for front body sidemember, R.H.	1
D 741-59	Closing panel, lateral, for front L.H. sidemember.	1
D 741-59a	Closing panel, lateral, for front R.H. sidemember.	1
D 741-77	Crossmember, front, with clamps.	1
D 741-99	Closing panel only, front unit.	2
DM 741-100	*Sidemember, front, L.H. Replaced by DS 741-100.*	1
D 741-100a	Sidemember, front, R.H. with upper gusset for securing heating duct.	1
D 741-106	Connecting piece between front crossmember and centre crossmember.	1
D 741-108	Packing, felt, anti-rattle, 240 x 15 x 4, for front part.	2
D 741-109	Packing, felt, anti-rattle, 435 x 15 x 4, for front part.	4
D 743-90	Strap, rubber, holding closing panel on sidemember, 1860 mm long.	2
D 743-91	Rubber, for closing panel of sidemember of centre unit, (950 mm long) (R. VI).	4
D 743-98	*Closing panel, detachable, for sidemember of centre unit, (954 mm long). Replaced by DM 743-98.*	4
DS 744-128	Grommet, round, for sealing body.	2
DS 744-129	Grommet, conical, for sealing body.	12

NUMBER	DESCRIPTION	No. OFF
D 811-2a	Sidemember for bottom of body, L.H.	1
DM 811-2	Sidemember for bottom of body, R.H.	1
D 812-72	*Closing panel, upper, for L.H. front pillar. Replaced by DS 812-72.*	1
D 812-72a	*Closing panel, upper, for R.H. front pillar. Replaced by DS 812-72a.*	1
D 812-73	Closing panel, inner, for L.H. front pillar, (upper part of body).	1
D 812-73a	Closing panel, inner, for R.H. front pillar, (upper part of body).	1
D 812-88	Front pillar, L.H. (lower part of body).	1
D 812-88a	Front pillar, R.H. (lower part of body).	1
D 812-90	Front pillar, L.H. (upper part of body).	1
D 812-90a	Front pillar, R.H. (upper part of body).	1
DM 814-64	Gusset, lower, for front pillar, with hole for passage of electric wiring, L.H.	1
D 814-88a	Gusset, lower, for front R.H. pillar.	1

NUMBER	DESCRIPTION	No. OFF
DM 822-2	*Side panel, L.H. for scuttle, with swivelling bracket for handbrake, L.H. steering: Replaced by DW 822-2b.*	1
DM 822-2a	*Side panel, R.H. for scuttle, with welded plates, L.H. steering. Replaced by DW 822-2c.*	1
DM 822-2b	*Side panel, L.H. for scuttle, R.H. steering. Replaced by DS 822-2d.*	1
DM 822-2c	*Side panel, R.H. for scuttle, R.H. steering. Replaced by DS 822-2e.*	1
D 822-3	Panel for scuttle.	1
DF 831-1	Panel (bare) for pedal toe board. Until July 1961.	1
DF 831-1a	Panel (bare) for pedal toe board. Since July 1961.	1
D 853-1a	Valance for front part of caisson.	1

NUMBER	DESCRIPTION	No. OFF
DM 853-90	Covering strip for front edge of finishing panel of front part of caisson.	1
D 961-75	Frame for windscreen, L.H. side.	1
D 961-75a	Frame for windscreen, R.H. side.	1
DS 961-189	*Reinforcement for centre of windscreen frame on top panel of scuttle. Replaced by DS 961-189a.*	1
304-S	Screw, hex. head, 6 x 16, for securing the closing panels of the front unit (R. III). Since March 1961.	12
2.334-S	Washer, shakeproof, 5.2 x 9.4, for the screws securing (R. VI):	
	- covering strip.	11
	- finishing panel.	18
2.363-S	Washer, flat, 6.5 x 14, for screws securing closing panel of forward part of front unit (R. III).	12
2.664-S	Screw, round head, 3.5 x 20, for securing closing panel on sidemember of central unit (R. III).	12
2.665-S	Screw, Parker, 5 x 16, for securing closing panels of forward part of front unit (R. VI). Until March 1961.	6

NUMBER	DESCRIPTION	No. OFF
88.616	Washer, 4.2 x 12 x 0.8, for screw securing closing panel on sidemember of centre unit (R. III).	12
615.715	Nut, self-locking, for 3.5 diameter screw securing closing panel on sidemember of centre unit (R. VI).	12
615.721	Nut, self-locking, for 4.85 diameter screw securing closing panels on forward part of front unit (R. VI). Until March 1961.	6
615.732	Nut, self-locking, for securing closing panels of front unit (R. VI). Since March 1961.	12
619.022	Washer, 5 x 14 x 1, for screws securing covering strip and finishing panel (R. III).	30
621.062	Screw, hex. head, 5 x 14, for securing (R. III):	
	- covering strip for front edge of finishing panel.	11
	- finishing panel.	18

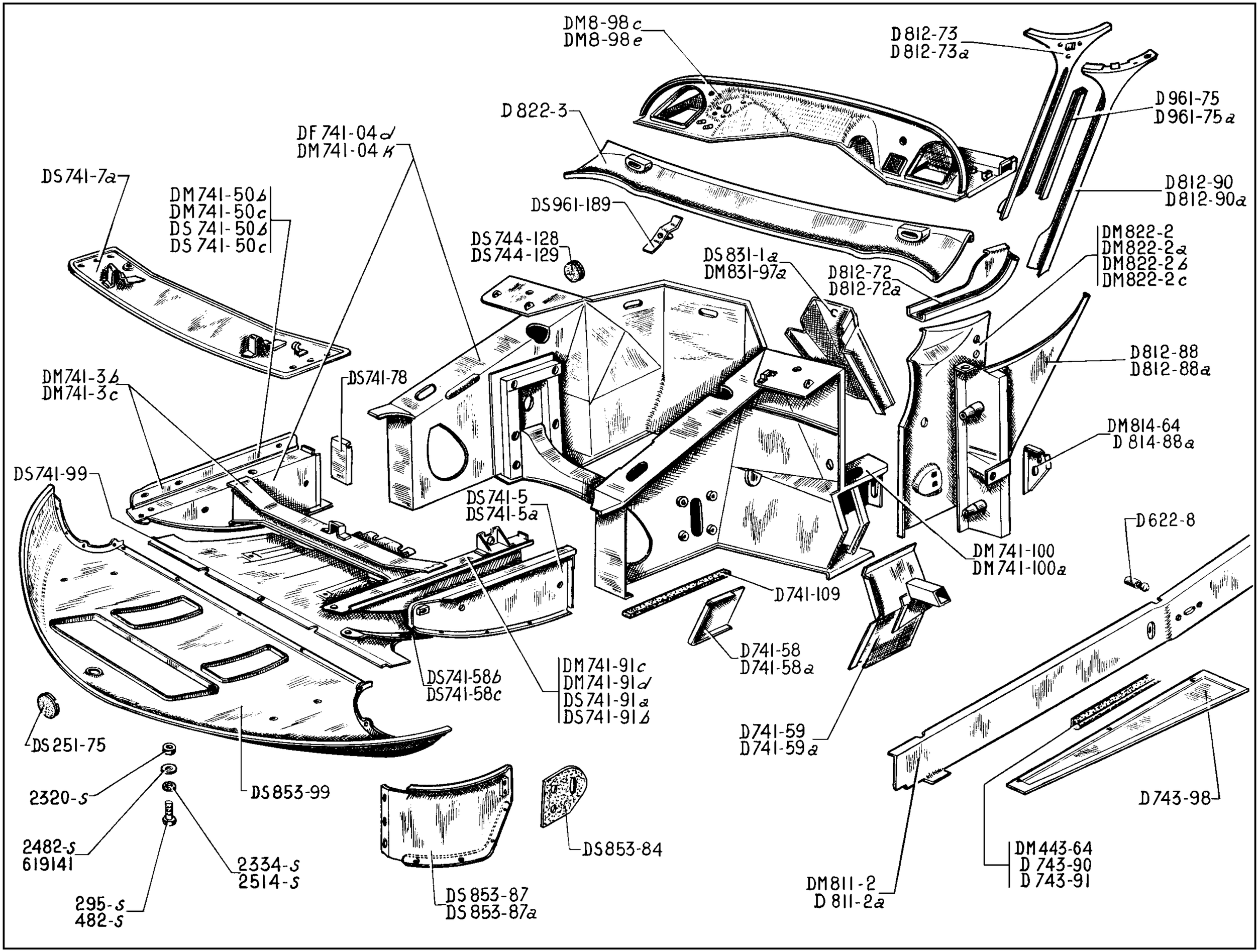
DM8-98c
DM8-98e
D812-73
D812-73a
D822-3
D961-75
D961-75a
DF741-04d
DM741-04k
DS741-7a
DM741-50b
DM741-50c
DS741-50b
DS741-50c
D812-90
D812-90a
DS961-189
DS744-128
DS744-129
DS831-1a
DM831-97a
D812-72
D812-72a
DM822-2
DM822-2a
DM822-2b
DM822-2c
D812-88
D812-88a
DM741-3b
DM741-3c
DS741-78
DM814-64
D814-88a
DS741-99
DS741-5
DS741-5a
D622-8
DM741-100
DM741-100a
D741-109
D741-58
D741-58a
DS741-58b
DS741-58c
DM741-91c
DM741-91d
DS741-91a
DS741-91b
D741-59
D741-59a
DS251-75
2320-s
DS853-99
D743-98
2482-s
619141
2334-s
2514-s
DS853-84
DM443-64
D743-90
D743-91
295-s
482-s
DS853-87
DS853-87a
DM811-2
D811-2a

NUMBER	DESCRIPTION	No. OFF
	Since September 1962	
DM 8-98c	Panel, upper, with scuttle shelf and crosspiece, 2 screws for securing relay control of accelerator, 4 screws welded in the central part, 40 mm hole on left-hand side. L.H. steering. Until September 1964.	1
DM 8-98e	*Panel, upper, with scuttle shelf and crosspiece, with steering gusset and clamp for securing gear control bracket, 4 screws welded in the central part, 40 mm hole on the right-hand side, R.H. steering. Until September 1964. No longer supplied.*	1
DM 8-98f	Panel, upper, with scuttle shelf and crosspiece, L.H. steering. September 1964 - July 1965.	1
DS 8-98c	Panel, upper, with scuttle shelf and crosspiece, R.H. steering. September 1964 - July 1965.	1
DS 8-98d	Panel, upper, with scuttle shelf and crosspiece, L.H. steering. Since July 1965.	1
DS 8-98e	Panel, upper, with scuttle shelf and crosspiece, R.H. steering. Since July 1965.	1
DS 251-75	Sealing plug for starting handle hole in front valance (R. VI).	1
DX 251-80	Clip securing starting handle. Since July 1965.	1
DX 251-101	Bracket for starting handle. Since July 1965.	1
DM 334-114b	Bracket for bearing of gear change control, 97 mm and 120 mm fixing centres. L.H. steering. Since July 1965.	1
DM 334-284c	Bracket for bearing of gear change control, 116 mm and 120 mm fixing centres. R.H. steering. Since July 1965.	1

NUMBER	DESCRIPTION	No. OFF
DM 443-64	Sealing rubber for finishing panel under body cantrail, 275 mm long (R. VI).	2
D 622-8	Pin with shoulder for stay.	2
DF 741-04d	*Caisson, front assembly, with intermediate crosspiece and bracket for gear change control bearing, one hole 56 mm diameter for passage of piping. L.H. steering. Until June 1964. Replaced by DM 741-04g; order in addition: 1-DF 314-015b.*	1
DM 741-04g	Caisson, front assembly, with intermediate crosspiece and bracket for gear change control bearing, with mounting for clutch pedal gear by 3 screws, L.H. steering. June 1964 - July 1965.	1
DM 741-04k	Caisson, front assembly, with intermediate crosspiece and bracket for gear change control bearing. R.H. steering. Until July 1965.	1
DS 741-04g	Caisson, front assembly, with intermediate crosspiece, without bearing bracket, gusset between panel and sidemember reinforced, 1 slot 80 mm on right-hand sidemember, R.H. steering. Since July 1965.	1
DS 741-04h	Caisson, front assembly, with intermediate crosspiece, without bearing bracket, gusset between panel and sidemember reinforced, 2 slots 52 mm on left-hand sidemember, L.H. steering. Since July 1965.	1
DM 741-3b	*Caisson, front assembly, (front part) with intermediate crosspiece and bracket for gear change control bearing, L.H. steering. Until July 1965. Replaced by DX 741-3a; order in addition: 1-DX 251-80, 1-DX 251-101, 1-DM 334-114b.*	1

NUMBER	DESCRIPTION	No. OFF
DM 741-3c	*Caisson, front assembly (front part) with intermediate crosspiece and bracket for gear change control bearing. R.H. steering. Until July 1965. Replaced by DS 741-3b; order in addition: 1-DX 251-80, 1-DX 251-101, 1-DM 334-284c.*	1
DS 741-3b	Caisson, front assembly (front part) without bearing bracket, 2 notches in the lower part, R.H. steering. Since July 1965.	1
DX 741-3a	Caisson, front assembly (front part) without bearing bracket, 2 notches in the lower part. L.H. steering. Since July 1965.	1
DS 741-5	Sidemember, front, of front unit, left-hand.	1
DS 741-5a	*Sidemember, front, of front unit, right-hand. Until July 1965. Replaced by DX 741-5; order in addition: 1-DX 251-80, 1-DX 251-101.*	1
DX 741-5	Sidemember, front, front unit, right-hand. Since July 1965.	1
DS 741-7a	*Crosspiece, front, for spare wheel, with bracket for starting handle. Until September 1964. Replaced by DX 741-7.*	1
DS 741-7b	*Crosspiece, front, for spare wheel, with bracket for starting handle. September 1964 - July 1965. Replaced by DX 741-7.*	1
DX 741-7	Crosspiece for spare wheel and starting handle bracket. Since July 1965.	1
DM 741-50b	*Extension, front, comprising: front sidemember, closing panel for sidemember, distance piece for front unit, bracket for gear change control, left-hand, L.H. steering. Until July 1965. Replaced by DX 741-50; order in addition: 1-DX 251-80, 1-DX 251-101, 1-DM 334-114b.*	1

The numbers underlined indicate new parts which do not appear on the illustration.

NUMBER	DESCRIPTION	No. OFF
DM 741-50c	*Extension, front, comprising front crossmember, closing panel for sidemember, distance piece for front unit, and bracket for gear change control, right-hand, R.H. steering. Until July 1965. Replaced by DX 741-50c; order in addition: 1-DX 251-80, 1-DX 251-101, 1-DM 334-284c.*	1
DS 741-50b	*Extension, front, comprising: front crossmember for sidemember, distance piece for front unit, left-hand, R.H. steering. Until July 1965. Replaced by DX 741-50b.*	1
DS 741-50c	*Extension, front, comprising: front crossmember, closing panel for sidemember, distance piece for front unit, right-hand, L.H. steering. Until July 1965. Replaced by DX 741-50a.*	1
DX 741-50	Extension, front, comprising: front crossmember, closing panel for sidemember, distance piece for front unit, sidemember for front unit, left-hand, L.H. steering. Since July 1965.	1
DX 741-50a	Extension, front, comprising: front crossmember, closing panel for sidemember, distance piece for front unit, sidemember for front unit, right-hand, L.H. steering. Since July 1965.	1
DX 741-50b	Extension, front, comprising: front crossmember, closing panel for sidemember, distance piece for front unit, sidemember for front unit, left-hand, R.H. steering. Since July 1965.	1
DX 741-50c	Extension, front, comprising: front crossmember, closing panel for sidemember, distance piece for front unit, sidemember for front unit, right-hand, R.H. steering. Since July 1965.	1
D 741-58	Closing panel for front body sidemember, left-hand.	1
D 741-58a	Closing panel for front body sidemember, right-hand.	1

NUMBER	DESCRIPTION	No. OFF
DS 741-58	Closing panel for cantrail sidemember, left-hand. Since July 1965.	1
DS 741-58a	Closing panel for cantrail sidemember, right-hand. Since July 1965.	1
DS 741-58b	*Closing panel for cantrail sidemember, left-hand. Since July 1965. Replaced by DS 741-58.*	1
DS 741-58c	*Closing panel for cantrail sidemember, right-hand. Until July 1965. Replaced by DS 741-58a.*	1
D 741-59	Closing panel, lateral, for left-hand front sidemember.	1
D 741-59a	Closing panel, lateral, for right-hand front sidemember.	1
DS 741-78	Distance piece, front unit, between sidemember and cantrail.	2
DM 741-91c	*Sidemember, front unit, with bracket for gear change control, left-hand, L.H. steering. Until July 1965. Replaced by DX 741-91b.*	1
DM 741-91d	Sidemember, front unit, with bracket for gear change control, right-hand, R.H. steering. Until July 1965.	1
DS 741-91a	*Sidemember, front unit, left-hand, R.H. steering. Until July 1965. Replaced by DX 741-91d.*	1
DS 741-91b	Sidemember, front unit, right-hand, L.H. steering. Until July 1965.	1
DS 741-91c	Sidemember, front unit, with 10 welded nuts, right-hand, R.H. steering. Since July 1965.	1

NUMBER	DESCRIPTION	No. OFF
DX 741-91a	Sidemember, front unit, with 3 welded nuts, right-hand, L.H. steering. Since July 1965.	1
DX 741-91b	Sidemember, front unit, with 6 welded nuts, left-hand, L.H. steering. Since July 1965.	1
DX 741-91d	Sidemember, front unit, with 2 welded nuts, left-hand, R.H. steering. Since July 1965.	1
DS 741-99	Closing panel for front unit.	1
DM 741-100	*Sidemember, front, left-hand. Until July 1965. Replaced by DS 741-100.*	1
DM 741-100a	Sidemember, front, with distance piece and gusset, right-hand.	1
DS 741-100	Sidemember, front, left-hand. Since July 1965.	1
D 741-109	Packing, felt, anti-rattle, 435 x 15 x 4, for closing front part of front unit.	4
D 743-90	Strap, rubber, holding closing panel on sidemember (1860 mm long).	2
D 743-91	Rubber, for closing panel of sidemember of centre unit (950 mm long) (R. VI).	4
D 743-98	*Closing panel, detachable, for sidemember of centre unit (954 mm long). Until April 1965. Replaced by DM 743-98.*	4
DM 743-98	Closing panel, detachable, for sidemember of centre unit, (954 mm long). Since April 1965.	4
D 811-2a	Sidemember for bottom of body, right-hand.	1
DM 811-2	Sidemember for bottom of body, left-hand.	1
D 812-72	*Closing panel, upper, for centre pillar, left-hand. Until September 1964. Replaced by DS 812-72.*	1

The numbers underlined indicate new parts which do not appear on the illustration.

NUMBER	DESCRIPTION	No. OFF
D 812-72a	*Closing panel, upper, for R.H. front pillar. Until September 1964. Replaced by DS 812-72a.*	1
DS 812-72	Closing panel for L.H. front pillar. Since September 1964.	1
DS 812-72a	Closing panel for R.H. front pillar. Since September 1964.	1
D 812-73	Closing panel, inner, for L.H. front pillar (upper part of body).	1
D 812-73a	Closing panel, inner, for R.H. front pillar (upper part of body).	1
D 812-88	Front pillar, L.H. (lower part of body).	1
D 812-88a	Front pillar, R.H. (lower part of body).	1
D 812-90	Front pillar, L.H. (upper part of body).	1
D 812-90a	Front pillar, R.H. (upper part of body).	1
DM 814-64	Gusset, lower, for front pillar with hole for passage of electric wiring, L.H.	1
D 814-88a	Gusset, lower, for front R.H. pillar.	1

NUMBER	DESCRIPTION	No. OFF
DM 822-2	*Side panel, L.H. for scuttle, with swivelling bracket for hand-brake. L.H. steering. Until September 1964. Replaced by DW 822-2b.*	1
DM 822-2a	*Side panel, R.H. for scuttle, with welded plates, L.H. steering. Until September 1964. Replaced by DW 822-2c.*	1
DM 822-2b	*Side panel, L.H. for scuttle. R.H. steering. Until September 1964. Replaced by DS 822-2d.*	1
DM 822-2c	*Side panel, right-hand, for scuttle. R.H. steering. Until September 1964. Replaced by DS 822-2e.*	1
DS 822-2d	Side panel, left-hand, for scuttle. R.H. steering. Since September 1964.	1
DS 822-2e	Side panel, right-hand, for scuttle. R.H. steering. Since September 1964.	1
DW 822-2b	Side panel, left-hand, for scuttle L.H. steering. Since September 1964.	1
DW 822-2c	Side panel, right-hand, for scuttle. L.H. steering. Since September 1964.	1
D 822-3	Top panel for scuttle. Until September 1964.	1
DS 822-3	Top panel for scuttle, (distance between centres for securing windscreen wipers 556 mm). Since September 1964.	1
DS 831-1a	Panel only, for brake pedal. L.H. steering.	1
DM 831-97a	Panel for accelerator pedal, L.H. steering.	1
DS 853-84	Rubber between closing panel and bumpers.	2

NUMBER	DESCRIPTION	No. OFF
DS 853-87	Closing panel, lateral, for finishing panel, L.H.	1
DS 853-87a	Closing panel, lateral, for finishing panel, R.H.	1
DS 853-99	Finishing panel for front part of caisson.	1
D 961-75	Frame for windscreen, L.H. side.	1
D 961-75a	Frame for windscreen, R.H. side.	1
DS 961-189	*Reinforcement for centre of windscreen frame on top panel of scuttle. Until September 1964. Replaced by DS 961-189a.*	1
DS 961-189a	Reinforcement for centre of windscreen frame on top panel of scuttle. Since September 1964.	1
295-S	Screw, hex. head, 5 x 16, for securing closing panel	15
482-S	Screw, hex. head, 7 x 12.5, for securing crossmember	4
2.320-S	Nut, hex., 5 x 75, for closing panel	12
2.334-S	Washer, shakeproof, 5.2 x 9.4, for closing panel (R. VI).	15
2.482-S	Washer, 7.5 x 14, for securing crossmember	4
2.514-S	Washer, shakeproof, 7.3 x 12 for securing crossmember (R. VI).	4
309.637	Plug for holes securing safety belt	4
619.133	Washer, 5.25 x 15 x 1.5, for securing closing panel	4
619.141	*Washer 5.25 x 1.5, for securing closing panel (R. IV). Replaced by 619.133.*	4

The numbers underlined indicate new parts which do not appear on the illustration.

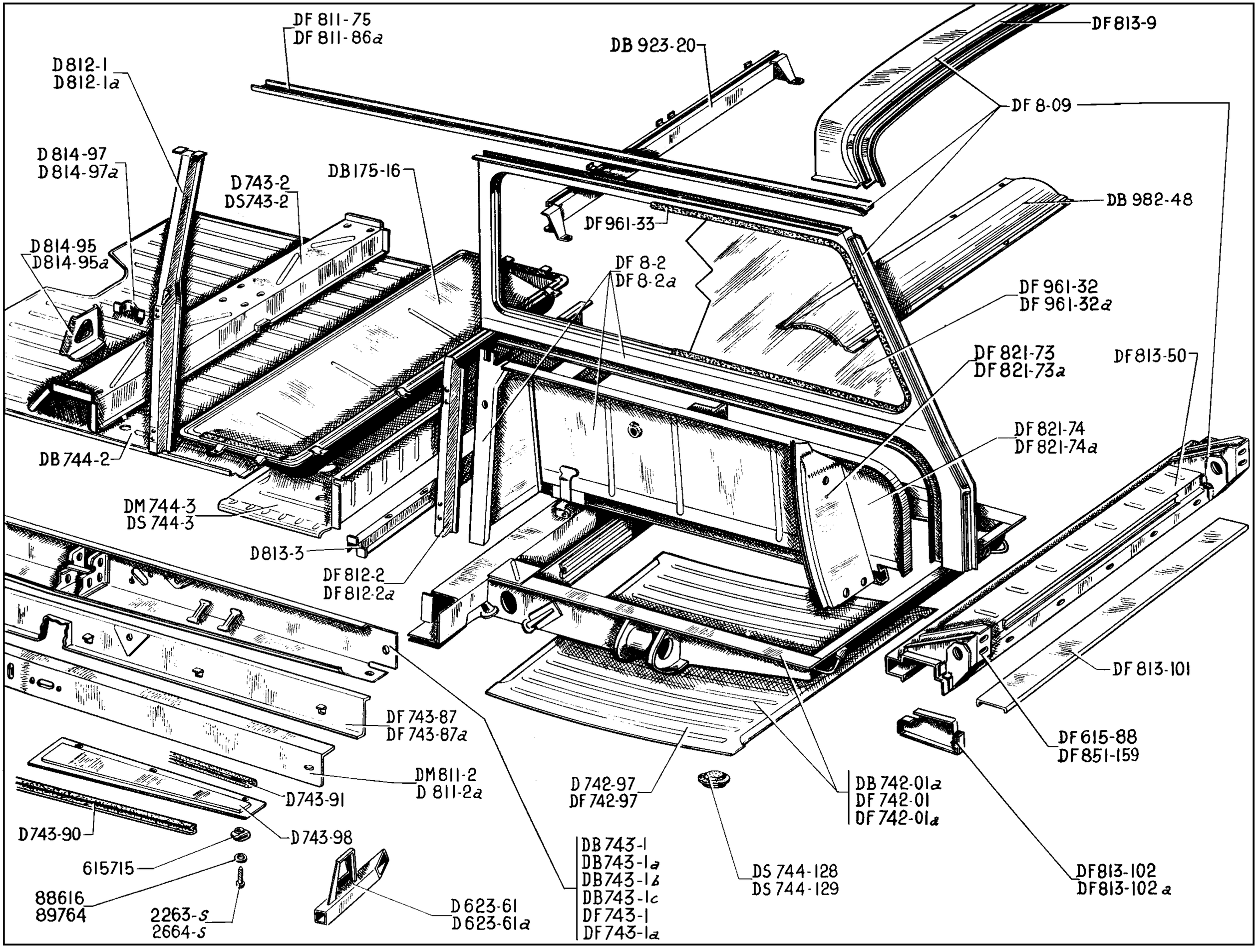
DF 811-75
DF 811-86a
DB 923-20
DF 813-9
D 812-1
D 812-1a
DF 8-09
D 814-97
D 814-97a
D 743-2
DS 743-2
DB 175-16
DB 982-48
DF 961-33
D 814-95
D 814-95a
DF 8-2
DF 8-2a
DF 961-32
DF 961-32a
DF 821-73
DF 821-73a
DF 813-50
DF 821-74
DF 821-74a
DB 744-2
DM 744-3
DS 744-3
D 813-3
DF 812-2
DF 812-2a
DF 813-101
DF 743-87
DF 743-87a
DF 615-88
DF 851-159
DM 811-2
D 811-2a
D 743-91
D 742-97
DF 742-97
DB 742-01a
DF 742-01
DF 742-01a
D 743-90
D 743-98
615715
88616
89764
2263-s
2664-s
DB 743-1
DB 743-1a
DB 743-1b
DB 743-1c
DF 743-1
DF 743-1a
DS 744-128
DS 744-129
DF 813-102
DF 813-102a
D 623-61
D 623-61a

NUMBER	DESCRIPTION	No. OFF
DF 8-09	Unit, rear, of body.	1
DF 8-2	Quarter panel and wheel arch assemblies, L.H.	1
DF 8-2a	Quarter panel and wheel arch assemblies, R.H.	1
DB 175-16	Access cover to tank. Until September 1962.	1
DB 175-16b	Access cover to tank. Since September 1962.	1
DF 615-88	Bracket for bumpers, rear.	2
D 623-61	Gusset with tubular support for jack, rear, L.H. Until September 1962.	1
D 623-61a	Gusset with tubular support for jack, rear, R.H. Until September 1962.	1
DB 742-01a	*Unit, rear, for caisson (rear part) centres for securing exhaust 212 mm. EXCEPT FAMILY TYPE. Replaced by DVB 742-01a.*	1
DF 742-01	*Unit, rear, for caisson (rear part). FAMILY TYPE. Until September 1962. Replaced by DF 742-01a.*	1
DF 742-01a	Unit, rear, for caisson (rear part), centres for securing exhaust 212 mm. FAMILY TYPE. Since September 1962.	1
D 742-97	Floor panel for rear boot. EXCEPT FAMILY TYPE.	1
DF 742-97	Floor panel for boot. FAMILY TYPE.	1
DB 743-1	Sidemember, L.H. for central pillar, with gusset, reinforced inside, 860 mm long. EXCEPT FAMILY TYPE. Until September 1962.	1
DB 743-1a	Sidemember, R.H. for central pillar, with gusset, reinforced inside, 860 mm long. EXCEPT FAMILY TYPE. Until September 1962.	1

NUMBER	DESCRIPTION	No. OFF
DB 743-1b	Sidemember, R.H. for central pillar, reinforced inside, 1.695 m long, 2 mm thick. Since September 1962.	1
DB 743-1c	Sidemember, L.H. for central pillar, reinforced inside, 1.695 m long, 2 mm thick. Since September 1962.	1
DF 743-1	Sidemember, L.H. for central pillar, with gusset, reinforced inside, 783 mm FAMILY TYPE. Until September 1962.	1
DF 743-1a	Sidemember, R.H. for central pillar, with gusset, reinforced inside, 783 mm. FAMILY TYPE. Until September 1962.	1
D 743-2	Crossmember under front seat. Until September 1962.	1
DS 743-2	Crossmember under front seat, 1.260 m long, 447 mm wide. Since September 1962.	1
DS 743-77	Closing panel for sidemember on L.H. rear pillar. Since September 1962.	1
DS 743-77a	Closing panel for sidemember on R.H. rear pillar. Since September 1962.	1
DF 743-87	Inner panel, with reinforcement, for central pillar sidemember, L.H.	1
DF 743-87a	Inner panel, with reinforcement, for central pillar sidemember, R.H.	1
D 743-90	Rubber strip for closing panel on sidemember (1860 mm long).	2
D 743-91	Rubber strip for closing panel of central pillar sidemember (950 mm long) (R. VI).	4

NUMBER	DESCRIPTION	No. OFF
D 743-98	*Closing panel, detachable, for centre unit sidemember (954 mm long). Until April 1965. Replaced by DM 743-98.*	4
DM 743-98	Closing panel, detachable, for centre unit sidemember, 954 mm long. Since April 1965.	4
DB 744-2	Valance, central, of caisson, with opening for exhaust box, longitudinal reinforcement, thickness 2 mm. Since September 1962.	1
DM 744-3	*Heelboard for petrol tank. Except FAMILY TYPE. Until September 1962. Replaced by DX 744-3.*	1
DS 744-3	*Heelboard for petrol tank. Except FAMILY TYPE. Since September 1962. Replaced by DX 744-3.*	1
DS 744-128	Grommet, round, for sealing body.	2
DS 744-129	Grommet, conical, for sealing body.	12
D 811-2a	Sidemember for bottom of body, R.H.	1
DM 811-2	Sidemember for bottom of body, L.H.	1
DF 811-75	Extension for cant rail, L.H.	1
DF 811-86a	Extension for cant rail, R.H.	1
D 812-1	*Central pillar of body, L.H. Until October 1962. Replaced by DW 812-1.*	1
D 812-1a	*Central pillar of body, R.H. Until October 1962. Replaced by DW 812-1a.*	1
DW 812-1	Centre pillar with hole for parking light and fixing for safety harness, left-hand. Since October 1962.	1
DW 812-1a	Centre pillar with hole for parking light and fixing for safety harness, right-hand. Since October 1962.	1
DF 812-2	Rear pillar of body, L.H.	1
DF 812-2a	Rear pillar of body, R.H.	1
D 813-3	Crossmember, lower, rear of body.	1
DF 813-9	Crossmember, upper, rear of body.	1

The numbers underlined indicate new parts which do not appear on the illustration.

NUMBER	DESCRIPTION	No. OFF
DF 813-50	Crossmember, lower, rear, of body.	1
DF 813-101	Closing panel for lower rear crossmember of body.	1
DF 813-102	Side closing panel for lower L.H. crossmember of body.	1
DF 813-102a	Side closing panel for lower R.H. crossmember of body.	1
D 814-95	Gusset for joining front L.H. and rear R.H. sidemembers at base of body.	2
D 814-95a	Gusset for joining front R.H. and rear L.H. sidemembers at base of body.	2
D 814-97	Reinforcement, lower, for central pillar, L.H.	1
D 814-97a	Reinforcement, lower, for central pillar, R.H.	1

NUMBER	DESCRIPTION	No. OFF
DF 821-73	Closing panel, rear, for wheel arch, L.H.	1
DF 821-73a	Closing panel, rear, for wheel arch, R.H.	1
DF 821-74	Wheel arch, rear, L.H.	1
DF 851-74a	Wheel arch, rear, R.H.	1
DF 851-159	Bracket for securing rear wing (rear part).	2
DB 923-20	Crossmember, rear for supporting squab (R. VI). BREAK, CONFORT. Until September 1963.	1
DF 961-32	Quarter glass (R. VI). Until September 1964.	2
DF 961-32a	Quarter glass, 6 mm thick (R. VI). U.S.A.	2
DF 961-32b	Quarter glass, 5 mm thick (R. VI). Since September 1964.	2
DF 961-33	Sealing rubber for quarter glass.	2

NUMBER	DESCRIPTION	No. OFF
DB 982-48	Closing panel on rear cross piece.	1
2.263-S	Screw, round head, 3.5 x 15.9, for securing the finishing panel of sidemember (R. VI). Since September 1962.	38
2.664-S	Screw, round head, 3.5 diameter x 20 mm long, for securing closing panel on central pillar sidemember (R. III). Until September 1962.	12
88.616	Washer, 4.2 x 12 x 0.8, for screws securing closing panel on central pillar sidemember (R. III).	
	- Until September 1962.	12
	- Since September 1962.	38
89.764	Washer, 5 x 10 x 1, for closing panel on sidemember	6
615.715	Nut, self-locking, for 3.5 diameter screw securing closing plate on central pillar sidemember (R. VI). Until September 1962.	12

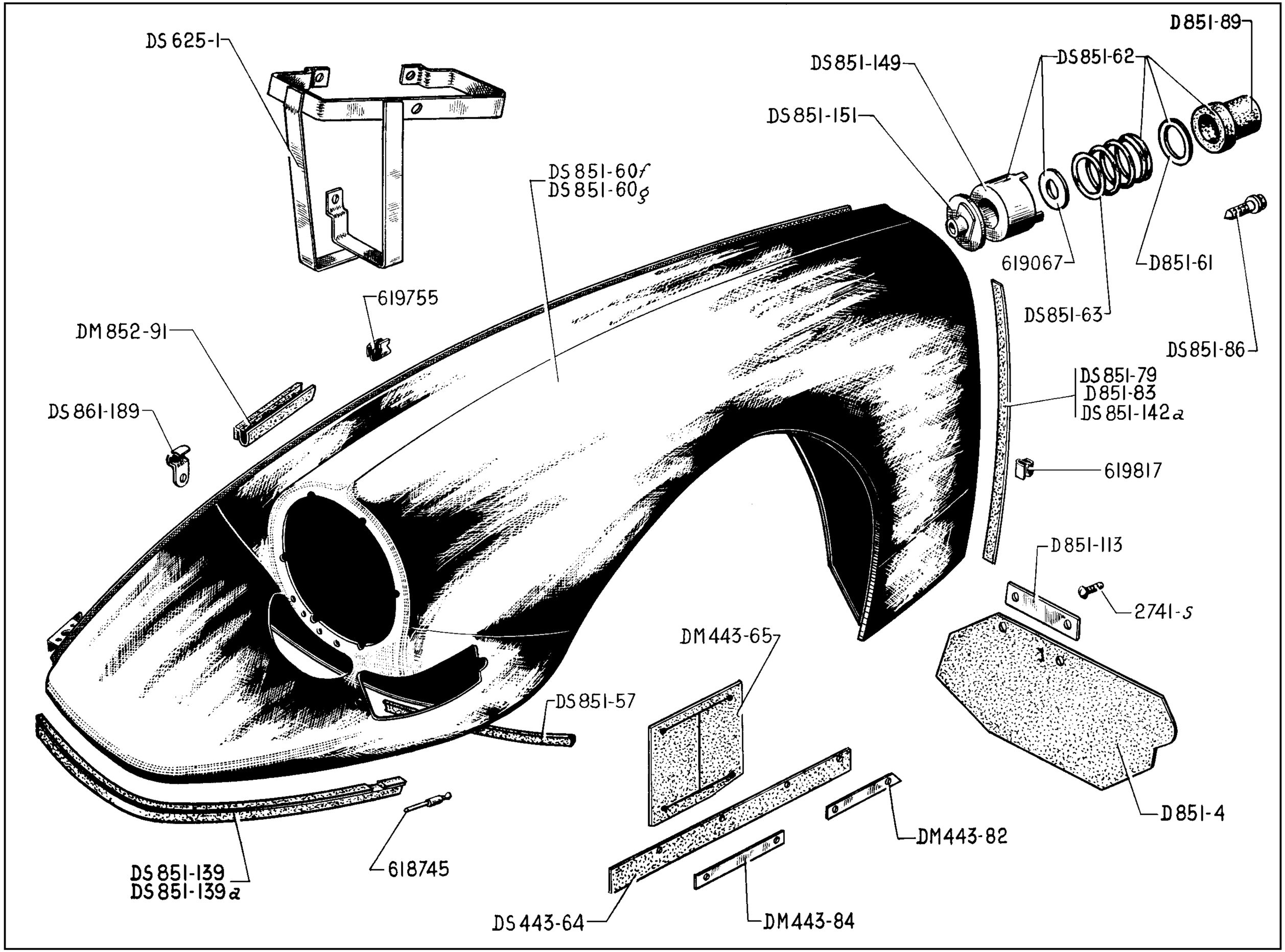
DS 625-1
D851-89
DS851-149
DS851-62
DS851-151
DS 851-60f
DS 851-60g
619067
D851-61
619755
DS851-63
DM 852-91
DS851-86
DS 851-79
D851-83
DS 851-142a
DS 861-189
619817
D851-113
2741-S
DM443-65
DS851-57
D851-4
DM443-82
DS 851-139
DS 851-139a
618745
DS 443-64
DM443-84

NUMBER	DESCRIPTION	No. OFF
	Until September 1962	
DM 443-64	Sealing strip on steering relay shield (R. VI).	2
DM 443-65	Seal, rubber, for steering relay opening.	2
DS 625-96a	Bracket for holding oil-can.	1
D 851-4	Mud flap, on wing, 160 mm long.	2
D 851-52	Bracket, outer, for securing L.H. front wing on finishing plate.	1
D 851-52a	Bracket, outer, for securing R.H. front wing on finishing plate.	1
D 851-58	Washer, 5.5 x 28 x 2, for locking screw securing:	
	- centre bracket on front wing.	12
	- bracket securing wing on front crossmember.	4
DM 851-60d	Front wing, L.H.	1
DS 851-60a	Front wing, R.H. adjustable, locating bracket secured by one central screw.	1
D 851-61	Washer, 25 x 44, for spigot spring in wing.	4
DS 851-62	Locating socket, adjustable, for spigot on wing, secured by one central screw.	4
DS 851-63	Thrust washer for spigot in wing, 44 mm external diameter, 4 coils.	4
DS 851-79	*Sealing strip, between wing and body, 234 mm long. Replaced by DS 851-132.*	2
D 851-83	Sealing strip, rubber, 385 mm long:	
	- wing valance, front part.	2
	- wing valance, rear part.	2
	- inner panel of front part.	2

NUMBER	DESCRIPTION	No. OFF
DS 851-86	Screw, for securing adjustable locating socket on wing, 20 mm long under head.	4
D 851-89	Sleeve, rubber, for locating wing positioning spigot.	4
D 851-91	Bracket, inner, for securing front wing to crossmember.	2
D 851-113	Plate, 26 x 80, for reinforcing mud flap.	2
D 851-132	Seal, rubber, between wing and caisson, 250 mm long x 173 mm wide. Until February 1962.	2
D 851-133	Bracket, L.H. for securing rubber seal between wing and caisson. Until February 1962.	1
D 851-133a	Bracket, R.H. for securing rubber seal between wing and caisson. Until February 1962.	1
D 851-134	Reinforcing plate for securing rubber seal between wing and caisson, 217 mm long. Until February 1962.	2
D 851-135	Reinforcing plate for securing rubber seal between wing and caisson, 125 mm long. Until February 1962.	2
D 851-136	Closing plate on wing.	2
DS 851-149	Locating socket, adjustable only, for spigot.	4
DS 851-151	Lockwasher for adjustable locating socket.	4
DM 852-91	Buffer, rubber, on wing for bonnet closing.	4
DS 982-68b	Anti-rattle packing, rubber, L.H. for wing valance (rear part) (R. VI).	1
DS 982-68c	Anti-rattle packing, rubber, R.H. for wing valance (rear part) (R. VI).	1
DS 982-69b	Anti-rattle packing, L.H. for wing valance (front part) (R. VI).	1

NUMBER	DESCRIPTION	No. OFF
DS 982-69c	Anti-rattle packing, R.H. for wing valance (front part) (R. VI).	1
DM 982-109	Anti-rattle packing, L.H. for wing valance. Since January 1960.	1
DM 982-109a	Anti-rattle packing, R.H. for wing valance. Since January 1960.	1
124-S 30	*Screw, round head, 5 diameter x 12.5 mm long, for securing closing plate on wing. Replaced by 2.502-S 30 (R. VI).*	14
483-S	Screw, hex. head, 7 diameter x 16 mm long, for securing wing bracket to finishing panel	4
521-S	Screw, hex. head, 9 diameter x 16 mm long, for securing wing on front crossmember	2
538-S	Screw, hex. head, 9 diameter x 25 mm long, for securing wing to finishing panel	2
2.312-S	Washer, plain, 5.5 x 9, for screws securing closing panel on wing	14
2.334-S	Washer, shakeproof, 5.2 x 9.4, for screws securing closing panel on wing (R. VI).	14
2.659	*Screw, hex. head, 5 x 13, for securing wing bracket on crossmember (R. III). Replaced by 283-S.*	4
2.741-S	Screw, round head, 4.85 diameter x 9.5 mm long, for securing mud flap reinforcement plate (R. VI).	4
233.400	Buffer, sealing, in wing side	2
619.067	Washer, 7.5 x 30 x 2, for wing locating socket	4
619.755	Clip for securing rubber sealing between wing and bonnet (R. VI).	28
619.764	*Clip for securing anti-rattle rubber packing (R. VI). Since January 1960. No longer supplied.*	12
619.793	Clip for securing anti-rattle rubber packing (R. VI). Since January 1960.	4

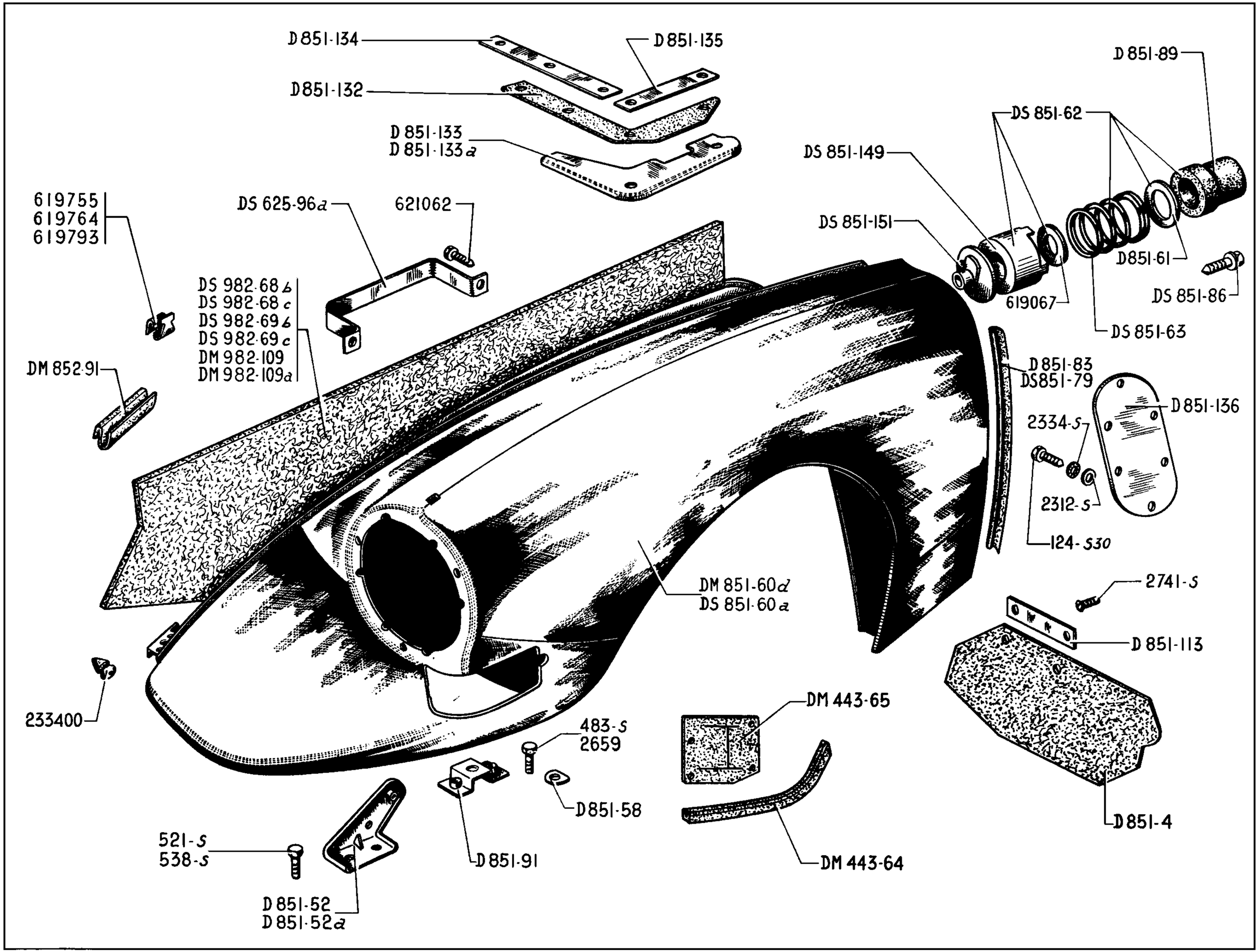
D 851-134
D 851-135
D 851-132
D 851-133
D 851-133a
D 851-89
DS 851-62
DS 851-149
DS 851-151
619755
619764
619793
DS 625-96a
621062
D851-61
DS 851-86
619067
DS 851-63
DS 982-68b
DS 982-68c
DS 982-69b
DS 982-69c
DM 982-109
DM 982-109a
DM 852-91
D 851-83
DS851-79
D 851-136
2334-S
2312-S
124-S30
DM 851-60d
DS 851-60a
2741-S
D 851-113
233400
DM 443-65
483-S
2659
D851-58
D851-4
521-S
538-S
D 851-91
DM 443-64
D 851-52
D 851-52a

NUMBER	DESCRIPTION	No. OFF
	Since September 1962	
DS 443-64	Sealing strip on steering relay shield, 300 mm long.	1
DM 443-65	Seal, rubber, for steering relay opening.	2
DM 443-82	Reinforcing plate, front, for securing sealing strip on front wing, fixing centres 61 mm.	4
DM 443-84	Reinforcing plate, rear, for securing sealing strip on front wing, fixing centres 78 mm.	4
DS 625-1	Bracket for holding oil-can.	1
D 851-4	Mud flap, on wing, 160 mm long.	2
DS 851-57	Sealing strip for inner panel of front wing.	2
DS 851-60f	*Front wing, left-hand. Until June 1965. Replaced by DX 851-60c; order in addition: 1-DS 851-109 (R. VI).*	1
DS 851-60g	*Front wing, right-hand. Until June 1965. Replaced by DX 851-61c; order in addition: 1-DS 851-109 (R. VI).*	1
DX 851-60c	Front wing, left-hand. Since June 1965.	1
DX 851-61c	Front wing, right-hand. Since June 1965.	1
D 851-61	Washer, 25 x 44, for spigot spring in wing.	4

NUMBER	DESCRIPTION	No. OFF
DS 851-62	Locating socket, adjustable, for spigot on wing, secured by one central screw.	4
DS 851-63	Spring for spigot in wing, 44 mm external diameter 4 coils.	4
DS 851-79	*Sealing strip between wing and body, 234 mm long. Until July 1965. Replaced by DS 851-132.*	2
DX 851-79	Sealing strip between wing and body, left-hand. Since July 1965.	1
DX 851-79a	Sealing strip between wing and body, right-hand. Since July 1965.	1
D 851-83	Sealing strip, rubber, 385 mm long, for:	
	- wing valance, front part.	2
	- wing valance, rear part.	2
DS 851-86	Screw for securing adjustable locating socket on wing, 20 mm long under head.	4
D 851-89	Sleeve, rubber, for locating wing positioning spigot.	4
DS 851-109	Sealing strip between wing and protection shield (R. VI). Since June 1965.	2
D 851-113	Plate, 26 x 80, for reinforcing mudflap.	2
DS 851-132	Sealing strip between wing and body, 125 mm long (R. VI). Since July 1965.	4

NUMBER	DESCRIPTION	No. OFF
DS 851-139	Rubber sealing strip between front wing and bumpers, left-hand (R. VI).	1
DS 851-139a	Rubber sealing strip between front wing and bumpers, right-hand (R. VI).	1
DS 851-142a	Rubber sealing strip between front wing and side panel of scuttle.	2
DS 851-149	Locating socket, adjustable (only), for spigot.	4
DS 851-151	Lockwasher for adjustable locating socket.	4
DM 852-91	Buffer, rubber, on wing for bonnet closing.	4
DS 861-189	Clip for securing trim on wing.	1
2.741-S	Screw, round head, 4.85 diameter x 9.5 mm long, for securing mud-flap reinforcement plate (R. VI).	4
619.067	Washer, 7.5 x 30 x 2, for wing locating socket (R. VI).	4
618.745	Rivet, POP, for securing rubber sealing strip on front wing (R. VI).	20
619.755	Clip for securing rubber sealing between wing and bonnet (R. VI).	28
619.817	Clip for securing (R. VI):	
	- rubber between wing and bumpers	8
	- rubber on side panel.	18

The numbers underlined indicate new parts which do not appear on the illustration.

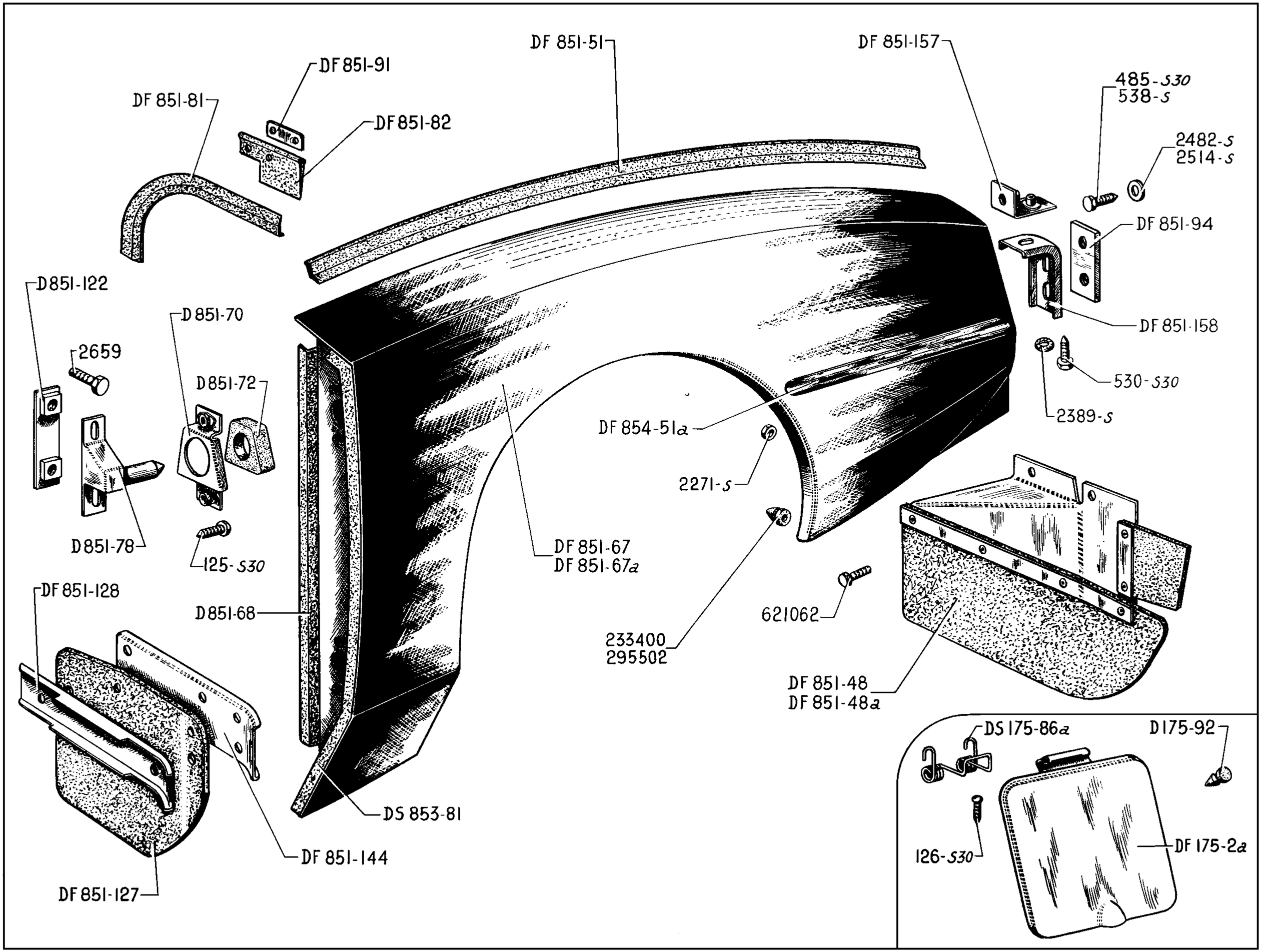
DF 851-51
DF 851-157
DF 851-91
DF 851-81
DF 851-82
485-S30
538-S
2482-S
2514-S
DF 851-94
DF 851-158
D851-122
D851-70
2659
D851-72
530-S30
2389-S
DF 854-51a
2271-S
D851-78
125-S30
DF 851-67
DF 851-67a
DF 851-128
D851-68
621062
233400
295502
DF 851-48
DF 851-48a
DS 175-86a
D175-92
DS 853-81
DF 851-144
126-S30
DF 175-2a
DF 851-127

NUMBER	DESCRIPTION	No. OFF
DF 175-2a	Cover for petrol tank filler tube.	1
DS 175-86a	Spring for petrol tank filler tube.	1
D 175-92	Rubber buffer for petrol tank filler tube cover, 14 mm long.	2
DF 851-48	Mud flap on rear wing, L.H.	1
DF 851-48a	Mud flap on rear wing, R.H.	1
DF 851-51	Sealing strip, rubber, upper, between wing and wheel arch, 795 mm long.	2
DF 851-67	Wing, rear, L.H.	1
DF 851-67a	Wing, rear, R.H.	1
D 851-68	Sealing strip, rubber, for closing panel at front of wing.	2
D 851-70	Bracket for centring wing (attached on wing).	4
D 851-72	Pad, rubber, 31 x 35 x 40, for wing positioning spigots.	4
D 851-78	Spigot for positioning wing.	2
DF 851-81	Sealing strip, rubber, on closing panel, 475 mm long.	2
DF 851-82	Sealing piece, upper, front, for gutter.	2

NUMBER	DESCRIPTION	No. OFF
DF 851-91	Reinforcement for securing the sealing piece, upper, front of the gutter. (R. VI).	2
DF 851-94	Bracket for securing wing (R. VI).	2
D 851-122	Plate for securing wing positioning spigot.	2
DF 851-127	Mud flap, front, on rear wing.	2
DF 851-128	Plate for securing front mud flap.	2
DF 851-144	Plate for securing front mud flap.	2
DF 851-157	Clip for securing rear wing, 48 mm long x 35 mm wide, 2 nuts welded on.	2
DF 851-158	Bracket for securing rear wing, 85 mm long x 40 mm wide.	2
DS 853-81	Covering strip, rubber, between wing and rear door, 690 mm long.	2
DF 854-51a	Embellishing strip on wing, 490 mm long (R. VI).	2
125-S 30	Screw, round head, 5 diameter x 15 mm long, for securing wing centring bracket	8
126-S 30	*Screw, round head, 5 diameter x 18 mm long, for securing petrol tank filler cover. Replaced by 2.250-S 30 (R. VI).*	2
485-S 30	Screw, hex. head, 7 diameter x 20 mm long, for securing bracket on crossmember.	4

NUMBER	DESCRIPTION	No. OFF
530-S 30	Screw, hex. head, 9 diameter x 22 mm long, for securing wing to bracket	2
538-S	Screw, hex. head, 9 diameter x 25 mm long, for securing plate on bracket	2
2.271-S	*Nut for locking embellishing strip on wing. Replaced by 2.269-S.*	6
2.284-S	Washer, shakeproof, 4.2 x 8, for securing embellishing strip (R. VI).	6
2.389-S	Washer, shakeproof, 9.5 x 16.5, for locking screw securing plate on bracket (R. VI).	2
2.482-S	Washer, plain, 7.5 x 14, for locking screw securing bracket on crossmember	4
2.514-S	Washer, shakeproof, 7.3 x 12, for securing bracket on crossmember (R. VI).	4
2.659	*Screw, hex. head, 5 x 13, for securing support for wing spigots. Replaced by 283-S.*	8
233.400	Buffer, rubber, on upper edge of wing .	2
295.502	Buffer, rubber, on wing side	2
621.062	Screw, hex. head, 5 diameter x 14 mm long, for securing wing mud flap	6

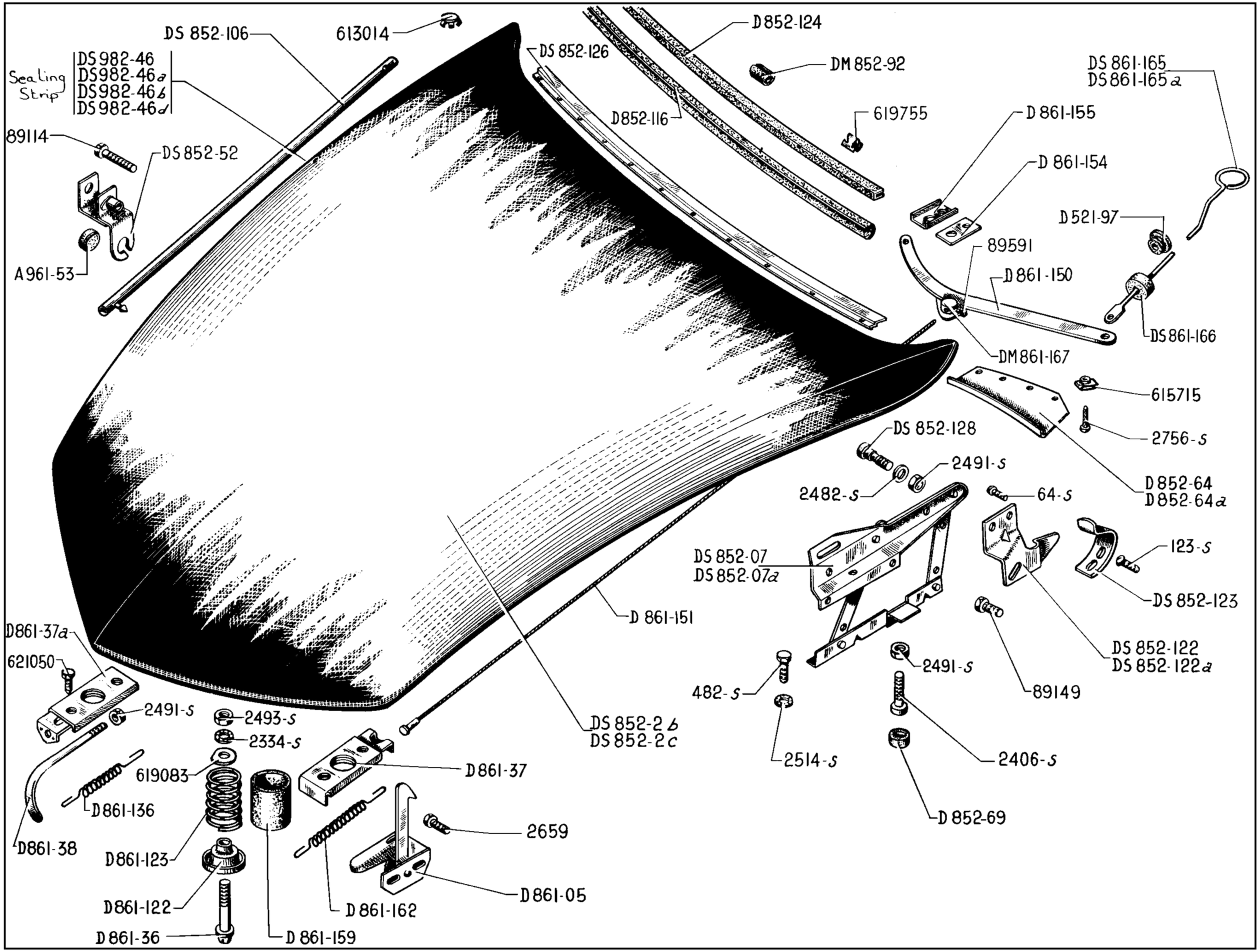
DS 852-106
613014
Sealing Strip
DS 982-46
DS 982-46a
DS 982-46b
DS 982-46d
89114
DS 852-52
A 961-53
DS 852-126
D 852-124
DM 852-92
D 852-116
619755
DS 861-165
DS 861-165a
D 861-155
D 861-154
D 521-97
89591
D 861-150
DS 861-166
DM 861-167
615715
2756-s
DS 852-128
2491-s
2482-s
D 852-64
D 852-64a
64-s
DS 852-07
DS 852-07a
123-s
DS 852-123
D 861-151
DS 852-122
DS 852-122a
89149
2491-s
482-s
2514-s
2406-s
D 852-69
DS 852-2b
DS 852-2c
D861-37a
621050
2491-s
2493-s
2334-s
619083
D 861-37
D 861-136
D861-38
D861-123
D861-122
D 861-36
D 861-159
D 861-162
2659
D 861-05

NUMBER	DESCRIPTION	No. OFF
A 961-53	Catch (rubber).	1
D 521-97	Grommet, rubber, 6 x 20 x 11, for hole for unlocking catch pull on dashboard.	1
DS 852-07	Hinge, L. H. distance between holes for fixing 163 mm.	1
DS 852-07a	Hinge, R. H. distance between holes for fixing 163 mm.	1
DS 852-2b	Bonnet (base), secured by right-hand stay. Until September 1962.	1
DS 852-2c	*Bonnet (base), without front cross-piece. September 1962 - September 1964. Replaced by DS 852-2d; order in addition: 1-DS 961-146c.*	1
DX 852-2	Bonnet (base). Since September 1964.	1
DS 852-52	Anchor plate for bonnet stay. Until February 1965.	1
D 852-64	Plate, L. H. for rear sealing lining.	1
D 852-64a	Plate, R. H. for rear sealing lining.	1
D 852-69	Buffer at rear of bonnet.	3
DM 852-92	Sleeve, anti-rattle, 19 x 25 x 20, for bonnet fittings.	4
DS 852-106	Stay, 785 mm long, R. H. mounting.	1
D 852-116	Strip, rubber, for sealing rear of bonnet, 1500 mm long (U shaped).	1
DS 852-122	Retaining catch, L. H.	1
DS 852-122a	Retaining catch, R. H.	1
DS 852-123	Hook, for retaining catch.	2

NUMBER	DESCRIPTION	No. OFF
D 852-124	Sealing strip for rear of bonnet.	1
DS 852-126	Strip for securing sealing rubber, 1390 mm long.	1
DS 852-128	Pin for hinge mechanism, 18 mm long under head, machined part 9.8 mm long, threaded 7 diameter x 100 pitch.	2
D 861-05	Safety catch.	1
D 861-36	Bolt for bonnet closure, 74 mm long.	2
D 861-37	Bonnet lock, without spring, L. H. Until September 1962.	1
	Since September 1962.	2
D 861-37a	Bonnet lock, without spring, R. H. Until September 1962.	1
D 861-38	Control for lock. Until September 1962.	1
D 861-84	Washer, fibre, 7.5 x 17 x 1, for central buffer (R. VI). Since September 1964.	1
D 861-122	Cup, 7.5 x 40 x 12, for bonnet closing spring.	2
D 861-123	Spring for bonnet closing, 35 mm.	2
D 861-136	Return spring for lock catch. Until September 1962.	1
DX 861-149	Lever for unlocking bonnet, left-hand. Since July 1965.	1
D 861-50	*Lever for unlocking bonnet (2 holes 3.25 mm diameter x 223 mm between centres). Until September 1962.*	1
	September 1962 - July 1965. Replaced by DX 861-149, left-hand or DX 861-150, right-hand.	2
DX 861-150	Lever for unlocking bonnet, right-hand. Since July 1965.	1

NUMBER	DESCRIPTION	No. OFF
D 861-151	Cable connecting bonnet lock to control lever (R. VI). Until September 1962.	1
	Since September 1962.	2
D 861-154	Pad, rubber, 22 x 39, for unlocking control. Until September 1962.	1
D 861-155	Plate securing rubber pad for unlocking control. Until September 1962.	1
D 861-159	Sleeve, anti-rattle, for bonnet closing spring (R. VI). Since September 1962.	2
D 861-162	Return spring for locking catch L. H. Until September 1962.	1
	Since September 1962.	2
DS 861-165	*Control for unlocking catch, with rubber bush, 440 mm long. Until September 1962. Replaced by DS 861-165.*	1
DS 861-165a	*Unlocking control only. September 1962 - July 1965. Replaced by DX 861-165.*	2
DX 861-165	Unlocking control. Since July 1965.	1
DS 861-166	Sealing bush for unlocking control. Until September 1962.	1
	Since September 1962.	2
DM 861-167	Trunnion for securing cable of bonnet unlocking control on lever (R. VI). Until September 1962.	1
	Since September 1962.	2
DS 982-46	*Trimming for front and centre part of bonnet. September 1962-September 1964. Replaced by DS 982-46e; order in addition: 1-DS 982-46f, 1-DS 982-46g.*	1
DS 982-46a	*Trimming for side, rear of bonnet, R.H. side. September 1962 - March 1965. No longer supplied.*	1

The numbers underlined indicate new parts which do not appear on the illustration.

NUMBER	DESCRIPTION	No. OFF
DS 982-46b	*Trimming for side, front of bonnet, R.H. side. September 1962 - March 1965. Replaced by DS 982-46g.*	1
DS 982-46d	*Trimming for side, L.H. side. September 1962 - March 1965. Replaced by DS 982-46f.*	1
DS 982-46e	Trimming for centre part of bonnet. Since September 1964.	1
DS 982-46f	Trimming for side of bonnet. Since March 1965.	1
DS 982-46g	Trimming for side of bonnet. Since March 1965.	1
64-S	*Screw, round head, 4 diameter x 12.5 mm long, for securing retaining catch. Replaced by 2.241-S (R. VI).*	4
123-S	Screw, round head, 5 diameter x 10 mm long, for securing hook for retaining catch.	4
482-S	Screw, hex. head, 7 diameter x 12.5 mm long, for securing hinge mechanism to bonnet and front pillar.	10
2.334-S	Washer, shakeproof, 5.2 x 9.4, for locking spring catch (R. VI).	2

NUMBER	DESCRIPTION	No. OFF
2.406-S	Screw, cylindrical head, 7 diameter x 25 mm long, for securing buffer at rear of bonnet.	2
2.414-S	Screw, cylindrical head, 7 x 60, for centre buffer (R. VI). Since September 1964.	1
2.482-S	Washer, 7.5 x 14, for hinge mechanism pin. Until April 1965.	2
2.491-S	Nut, hex., 7 diameter x 100 pitch (R. III) for securing:	
	- rear buffer.	2
	- hinge mechanism pin.	2
2.493-S	Nut, hex., 7 diameter x 100 pitch, for securing bonnet closure bolt.	4
2.514-S	Washer, shakeproof, 7.3 x 12, for securing hinge mechanism on bonnet and front pillar (R. VI).	10
2.659	*Screw, hex. head, 5 x 13, for securing lock on bonnet. Replaced by 283-S.*	2
2.756-S	Screw, Parker, 3.5 diameter x 9.5 mm long, for securing rear packing strip (R. VI).	10

NUMBER	DESCRIPTION	No. OFF
89.114	*Screw, hex. head, 5 x 25, for securing the stay. Replaced by 285-S-30.*	1
89.149	Screw, hex. head, 5 diameter x 18 mm long, for securing retaining catch (R. III).	2
89.591	Screw, square head, 4 diameter x 8 mm long, for securing connecting cable.	2
613.014	Plug closing holes for windscreen washer in bonnet (R. VI).	As nec.
615.715	Nut, self-locking, for 3.5 diameter screw securing plate for packing strip (R. VI).	8
619.083	Washer, with flat, 7.5 x 25 x 2, for bonnet closure bolt.	4
619.755	Clip for securing rear sealing strip (R. VI).	4
621.050	Screw, hex. head, pointed, 5 diameter x 20 mm long, for securing bonnet lock.	4
624.025	Washer, 10.5 x 21 x 1, for securing hinge bracket (R. VI). Since April 1965.	4

The numbers underlined indicate new parts which do not appear on the illustration.

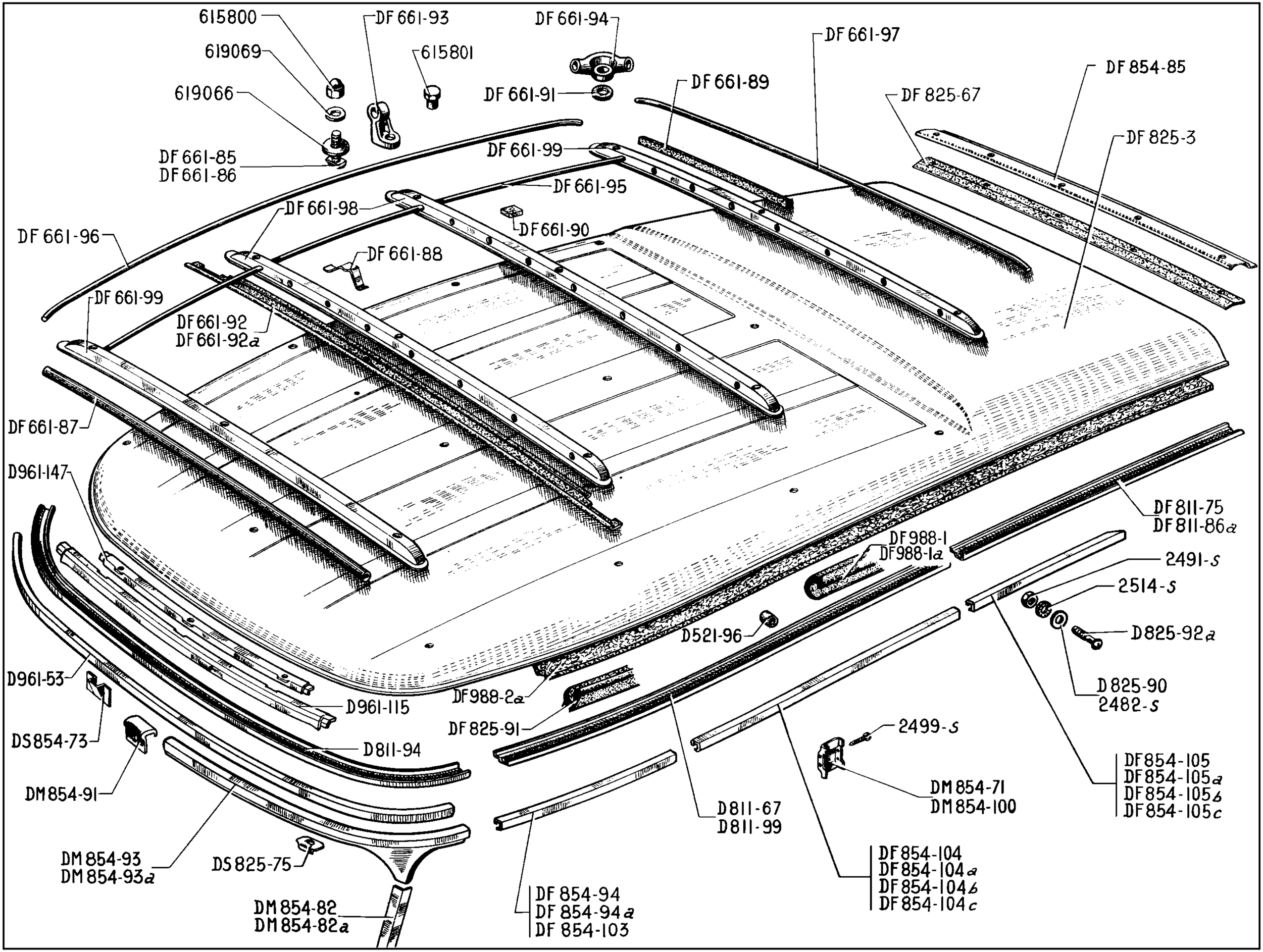
615800
DF 661-93
DF 661-94
DF 661-97
619069
615801
DF 854-85
619066
DF 661-91
DF 661-89
DF 825-67
DF 825-3
DF 661-85
DF 661-86
DF 661-99
DF 661-95
DF 661-98
DF 661-90
DF 661-96
DF 661-88
DF 661-99
DF 661-92
DF 661-92a
DF 661-87
D961-147
DF 811-75
DF 811-86a
DF 988-1
DF 988-1a
2491-s
2514-s
D521-96
D825-92a
D961-53
D825-90
2482-s
DF 988-2a
D961-115
DF 825-91
2499-s
DS 854-73
D811-94
DF 854-105
DF 854-105a
DF 854-105b
DF 854-105c
DM 854-91
DM 854-71
DM 854-100
D811-67
D811-99
DM 854-93
DM 854-93a
DS 825-75
DF 854-104
DF 854-104a
DF 854-104b
DF 854-104c
DM 854-82
DM 854-82a
DF 854-94
DF 854-94a
DF 854-103

NUMBER	DESCRIPTION	No. OFF
D 521-96	Bush, rubber, 8 x 22 x 20, on left-hand cant rail.	1
DF 661-85	Screw, 7 x 100 (2 flats on head) for securing the roof rack, length under head 18 mm (R. VI).	2
DF 661-86	Screw, 7 x 100 (2 flats on head) for securing the roof rack, length under head 31 mm (R. VI).	10
DF 661-87	Packing, anti-rattle for front rail of grid, 460 mm long (R. VI).	2
DF 661-88	Spring clip for grid rods (R. VI).	16
DF 661-89	Packing piece, rubber, anti-rattle, for grid rail (412 x 15 x 4).	4
DF 661-90	Packing piece, rubber, anti-rattle, for grid crossmembers (38 x 38 x 5).	4
DF 661-91	Washer, sealing, for grid on roof (R. VI).	12
DF 661-92	Base plate, rubber, for front and rear crossmembers, 1460 mm long (R. VI).	2
DF 661-92a	Base plate, rubber, for intermediate crossmember, 1350 mm long (R. VI).	2
DF 661-93	Bracket, intermediate, for rail (R. VI).	6
DF 661-94	Bracket, angled, for front and rear rail (R. VI).	4
DF 661-95	Rod for grid, 10 mm external diameter x 1213 mm long (R. VI).	8
DF 661-96	Rail, lateral, for grid, 14 mm external diameter x 1163 mm long.	2
DF 661-97	Rail, front and rear, for grid, 14 mm external diameter x 934 mm long.	2

NUMBER	DESCRIPTION	No. OFF
DF 661-98	Crossmember, intermediate, for grid, 1140 mm long (R. VI).	2
DF 661-99	Crossmember, front and rear, for grid, 1080 mm long.	2
D 811-67	*Cant rail, R.H. Replaced by DF 811-67.*	1
DF 811-67	Cant rail, right-hand.	1
DF 811-75	Extension for cant rail, left-hand.	1
DF 811-86a	Extension for cant rail, right-hand.	1
D 811-94	Cant rail, front part.	1
D 811-99	*Cant rail, L.H. Replaced by DF 811-99.*	1
DF 811-99	Cant rail, left-hand.	1
DF 825-3	Roof with rim for fixing, not painted.	1
DF 825-67	Sealing strip, rubber, rear, 1200 mm long (R. VI).	1
DS 825-75	Clip for securing roof to front pillar (R. VI).	2
D 825-90	Washer, with flat, 7.5 x 20, for securing roof. Until November 1964.	19
DF 825-91	Sealing strip, rubber, 5600 mm long.	1
D 825-92a	Screw, raised countersunk head, with flat, 7 diameter x 25 mm long for securing roof.	5
DM 854-71	Plate, interior, for finishing upper part of central pillar, R.H.	1
DS 854-73	Clip securing finishing strip on edge of roof.	1
DM 854-82	Finishing strip, upper, for front pillar, left-hand.	1
DM 854-82a	Finishing strip, upper, for front pillar, right-hand.	1
DF 854-85	Finishing strip, rear, for roof.	1
DM 854-91	Cover, joint, for front roof finishing strip.	1

NUMBER	DESCRIPTION	No. OFF
DM 854-93	Finishing moulding for front of roof, L.H.	1
DM 854-93a	Finishing moulding for front of roof, R.H.	1
DF 854-94	*Finishing moulding, lateral, for cant rail. L.H. Until October 1959. Replaced by DF 854-103; order in addition: 1-DF 854-104 and 1-DF 854-105.*	1
DF 854-94a	*Finishing moulding, lateral, for cant rail. R.H. Until October 1959. Replaced by DF 854-103; order in addition: 1-DF 854-104a and 1-DF 854-105a.*	1
DM 854-100	Plate, interior, for finishing upper part of central pillar L.H.	1
DF 854-103	Finishing moulding, lateral front, for cant rail, 510 mm long. Since October 1959.	2
DF 854-104	Finishing moulding, lateral, central, for cant rail, 800 mm long, L.H. October 1959 - May 1961.	1
DF 854-104a	Finishing moulding, lateral, central, for cant rail, 800 mm long, R.H. October 1959 - May 1961.	1
DF 854-104b	Finishing moulding, lateral, central, for cant rail, 870 mm long, L.H. Since May 1961.	1
DF 854-104c	Finishing moulding, lateral, central, for cant rail, 870 mm long, R.H. Since May 1961.	1
DF 854-105	Finishing moulding, lateral, rear, for cant rail, 510 mm long, L.H. October 1959 - May 1961.	1
DF 854-105a	Finishing moulding, lateral, rear, for cant rail, 510 mm long, R.H. October 1959 - May 1961.	1

The numbers underlined indicate new parts which do not appear on the illustration.

NUMBER	DESCRIPTION	No. OFF
DF 854-105b	Finishing moulding, lateral, rear, for cant rail, 440 mm long, L.H. Since May 1961.	1
DF 854-105c	Finishing moulding, lateral, rear, for cant rail, 440 mm long, R.H. Since May 1961.	1
D 961-53	Surround, metal, upper, for windscreen.	1
D 961-115	Reinforcement for centre windscreen frame (outer part).	1
D 961-147	Reinforcement for centre windscreen frame (inner part).	1

NUMBER	DESCRIPTION	No. OFF
DF 988-1	*Finishing strip, rubber, inner, for roof panel, 5470 mm long (R. VI). Until September 1962. Replaced by DF 988-1a.*	1
DF 988-1a	Finishing strip, rubber, inner, for roof panel, 5470 mm long. Since September 1962.	1
DF 988-2a	Packing, anti-rattle, for roof.	1
2.482-S	Washer, 7.5 x 14, for screws securing roof (R. III).	17
2.491-S	Nut, hex., 7 diameter x 100 pitch, for locking screws securing roof (R. III).	17
2.499-S	Screw, raised head, countersunk, 3.52 diameter x 9.5 mm long, for securing finishing plate on central pillar (R. VI).	6

NUMBER	DESCRIPTION	No. OFF
2.514-S	Washer, shakeproof, 7.3 x 12, for screws securing roof (R. VI).	17
615.800	Domed nut, 7 diameter x 100 pitch (13 mm high) for securing grid (R. VI).	10
615.801	Domed nut, 7 diameter x 100 pitch (12 mm high), machined part under head 7 mm long, for securing grid (R. VI).	2
619.066	Washer, plain, 7.5 x 30 x 1, for grid on roof (R. IV).	12
619.069	Washer, flat, 7.5 x 20 x 1, for grid on roof (R. IV).	12

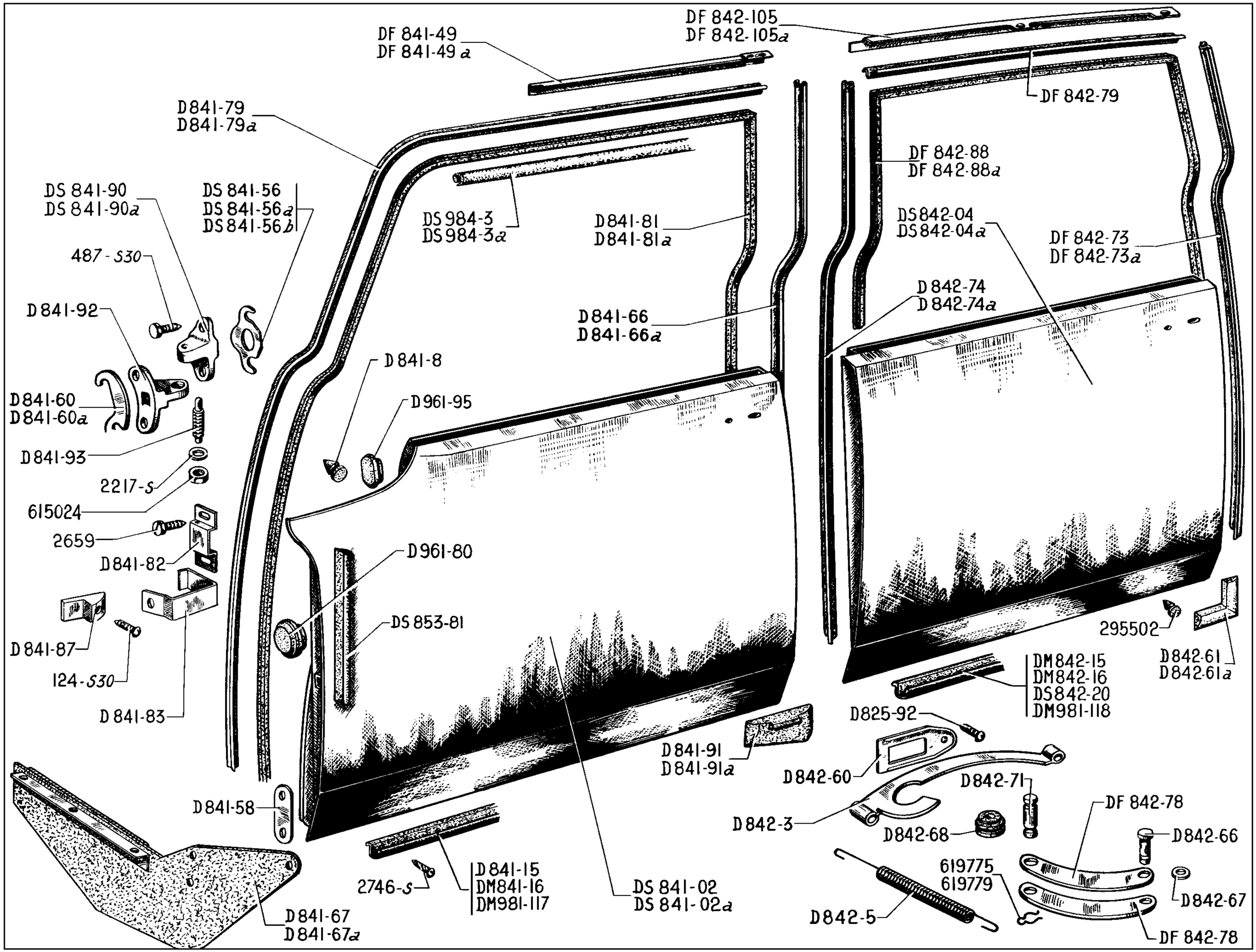
DF 841-49
DF 841-49a
DF 842-105
DF 842-105a
D841-79
D841-79a
DF 842-79
DF 842-88
DF 842-88a
DS 841-90
DS 841-90a
DS 841-56
DS 841-56a
DS 841-56b
DS 984-3
DS 984-3a
D841-81
D841-81a
DS842-04
DS842-04a
DF 842-73
DF 842-73a
487-S30
D842-74
D842-74a
D841-92
D841-66
D841-66a
D841-8
D841-60
D841-60a
D961-95
D841-93
2217-S
615024
2659
D841-82
D961-80
DS 853-81
295502
D842-61
D842-61a
D841-87
124-S30
DM842-15
DM842-16
DS842-20
DM981-118
D841-83
D825-92
D841-91
D841-91a
D842-60
D842-71
D841-58
DF 842-78
D842-3
D842-68
D842-66
619775
619779
D842-67
2746-S
D841-15
DM841-16
DM981-117
DS 841-02
DS 841-02a
D842-5
D841-67
D841-67a
DF 842-78

NUMBER	DESCRIPTION	No. OFF
DF 551-3b	Rear mirror, exterior, on front door, left-hand (R. VI). Since September 1964.	
D 825-92	Screw, raised countersunk head, 7 x 20, for securing the fixing plate for check strap on door (R. VI).	4
DS 841-02	*Door, front, L.H. without lock or window winder. Until January 1964. Replaced by DS 841-04.*	1
DS 841-02a	*Door, front, R.H. without lock or window winder. Until January 1964. Replaced by DS 841-04a.*	1
DS 841-04	Door, front, L.H. without lock, window winder, or pivot bracket. Since January 1964.	1
DS 841-04a	Door, front. R.H. without lock, window winder, or pivot bracket. Since January 1964.	1
D 841-8	Stop, flexible for door opening, 31.5 mm long x 30 mm diameter.	2
D 841-15	*Sealing strip, rubber, at bottom of door, 950 mm long. Until October 1963. Replaced by DS 841-15a for left side or DS 841-15b for right side.*	2
DS 841-15a	Sealing strip, rubber, at bottom of front door, L.H. 950 mm long. Since October 1963.	1
DS 841-15b	Sealing strip, rubber, at bottom of front door, R.H. 950 mm long. Since October 1963.	1
DM 841-16	Sealing strip at bottom of front door, 965 mm long, (R. VI). U.S.A. R.H. steering. Until September 1962.	2
DS 841-22	Sealing strip at bottom of front door, 937 mm long (R. VI). Since September 1962.	2
DF 841-49	Reinforcement, upper, for front door opening, L.H.	1
DF 841-49a	Reinforcement, upper, for front door opening, R.H.	1

NUMBER	DESCRIPTION	No. OFF
DS 841-56	Adjusting plate, 66 x 35 x 0.5, for pivot pin bracket.	As nec.
DS 841-56a	Adjusting plate, 66 x 35 x 1, for pivot pin bracket.	As nec.
DS 841-56b	Adjusting plate, 66 x 35 x 1.5, for pivot pin bracket.	As nec.
D 841-58	Plate, 26 x 90, for securing seal on front pillar, 2 holes 5 mm diameter x 60 mm between centres.	2
D 841-60	Adjusting plate, 41 x 63 x 1, for pivot pin bracket.	As nec.
D 841-60a	Adjusting plate, 41 x 63 x 2, for pivot pin bracket.	As nec.
D 841-66	Sealing strip for front L.H. door opening (on central pillar).	1
D 841-66a	Sealing strip for front R.H. door opening (on central pillar).	1
D 841-67	Sealing strip, lower, between front door and L.H. front wing.	1
D 841-67a	Sealing strip, lower, between front door and R.H. front wing.	1
D 841-79	Sealing strip for front L.H. door opening (cant rail and front pillar).	1
D 841-79a	Sealing strip for front R.H. door opening (cant rail and front pillar).	1
D 841-81	Sealing strip for L.H. front door opening.	1
D 841-81a	Sealing strip for R.H. front door opening.	1
D 841-82	Bracket securing door stop spring.	2
D 841-83	Spring for door stop (open position).	2

NUMBER	DESCRIPTION	No. OFF
D 841-87	Stop for front door, 46 mm long, 2 dowels, 36 mm between centres (R. VI).	2
DS 841-90	Bracket, cupped, upper L.H. and lower R.H. for door hinge pin (50 mm between centres of securing holes).	4
DS 841-90a	Bracket, cupped, lower L.H. and upper R.H. for door hinge pin (50 mm between centres of securing holes).	4
D 841-91	Sealing strip, lower, between L.H. front door and central pillar.	1
D 841-91a	Sealing strip, lower, between R.H. front door and central pillar.	1
D 841-92	Bracket for pivot pin screw, 42 mm between centres of securing holes.	8
D 841-93	Pivot pin, 9 x 45, for adjusting door pivot.	8
DS 842-04	*Door, rear, L.H. without lock or window winder. Until January 1964. Replaced by DS 842-07.*	1
DS 842-04a	*Door, rear, R.H. without lock or window winder. Until January 1964. Replaced by DS 842-07a.*	1
DS 842-07	Door, rear, L.H. without lock, window winder or pivot bracket. Since January 1964.	1

The numbers underlined indicate new parts which do not appear on the illustration.

NUMBER	DESCRIPTION	No. OFF
DS 842-07a	Door, front, without lock, window winder or pivot bracket, right side. Since January 1964.	1
D 842-3	Check strap for door (195 mm between centres of securing holes).	2
D 842-5	Spring, compensating, for door check strap, 270 mm long.	4
D 842-15	*Seal, rubber, at bottom of door, 850 mm long. Until October 1963. Replaced by DS 842-15a for left-hand or DS 842-15b for right-hand.*	2
DS 842-15a	Seal, rubber, at bottom of rear door, 850 mm long, left-hand. Since October 1963.	1
DS 842-15b	Seal, rubber, at bottom of rear door, 850 mm long, right-hand. Since October 1963.	1
DM 842-16	Sealing strip for bottom of rear door, 850 mm long (R. VI). U.S.A. and R.H. steering. Until September 1962.	2
DS 842-20	Sealing strip for bottom of rear door, 821 mm long (R. VI). Since September 1962.	2
D 842-60	Fixing plate for passage of check strap on rear door.	2
D 842-61	Seal, lower, between door and rear L.H. pillar.	1
D 842-61a	Seal, lower, between door and rear R.H. pillar.	1
D 842-66	*Pivot pin for door strap link, 7 mm diameter x 18 mm long under head o[illegible] at 14.5 mm. Until December [illegible]64. Replaced by DS 84[illegible]*	2
DS 842-66a	Pivot pin for door strap link (7 x 22). Since December 1964.	
D 842-67	Washer, 7.5 x 1[illegible] for door check strap link.	[illegible]
D 842-68	Roller for door check strap (R. VI).	2

NUMBER	DESCRIPTION	No. OFF
D 842-71	Spindle for roller and for attaching door check strap spring, 10 mm diameter x 37 mm long, distance between centres of grooves 20 mm and 28.5 mm.	4
DF 842-73	Sealing strip for rear L.H. door opening (rear pillar).	1
DF 842-73a	Sealing strip for rear R.H. door opening (rear pillar).	1
D 842-74	Sealing strip for rear L.H. door opening (centre pillar).	1
D 842-74a	Sealing strip for rear R.H. door opening (centre pillar).	1
DF 842-78	Link for door check strap, securing holes 137 mm between centres.	4
DF 842-79	Moulding, upper, for rear door opening sealing strip (cant rail).	2
DF 842-88	Sealing strip for L.H. door opening.	1
DF 842-88a	Sealing strip for R.H. door opening.	1
DF 842-105	Reinforcing strip for L.H. sealing strip.	1
DF 842-105a	Reinforcing strip for R.H. sealing strip.	1
DS 842-81	Sealing strip, rubber, for door.	4
D 861-84	Washer, fibre, for securing rear mirror (R. VI). Since September 1964.	1
D 961-80	Plug, round, 42 mm diameter for lower hole for adjusting window channel.	8
D 961-95	Plug, oval, 40 mm for upper hole for adjusting window channel.	8
DM 981-117	Strip securing seal at bottom of front door.	2

NUMBER	DESCRIPTION	No. OFF
DM 981-118	Strip securing seal at bottom of rear door.	2
DS 984-3	Sealing strip, rubber, for door opening (R. VI). (Sold by the metre). Until January 1963.	As nec.
DS 984-3a	*Sealing strip, rubber, for door opening (R. VI). (Sold by the metre). Since January 1963. Replaced by DS 984-3b.*	As nec.
DS 984-3b	Sealing strip, rubber, for door opening, 2800 mm long (R. VI). January 1963 - January 1964.	4
DS 984-3c	Sealing strip for door opening, 2800 mm long (light grey) (R. VI). January 1964 - March 1965.	4
124-S 30	*Screw, round head, 5 x 12.5, for securing rubber door stop. Replaced by 2.502-S-30 (R. VI).*	2
487-S 30	Screw, hex. head, 7 x 25, for securing door pivot pin bracket.	32
2.217-S	Washer, plain, 9.5 x 16 x 2, for door pivot adjustment pin.	8
2.482-S	Washer, flat, 7.5 x 14, for securing rear mirror. Since September 1964.	1
2.491-S	Nut, hex., 7 x 100, for securing rear mirror. Since September 1964.	1
2.514-S	Washer, shakeproof, 7.3 x 12, for securing rear mirror (R. VI). Since September 1964.	1
2.659	*Screw, hex. head, 5 x 13, for securing flange of stop spring. Replaced by 283-S.*	4
2.746-S	Screw, Parker, round head, 4.85 x 16, for securing lower strip (R. VI).	16
295.502	Stop, rubber, for closing door on centre and rear pillars	6
615.024	Nut, hex., 9 x 125, for door pivot adjustment pin (R. VI).	8
619.775	Spring clip, securing roller spindle on door check strap, 20 mm long (R. VI).	4
619.779	Spring clip for securing pivot in door check strap link, 14.5 mm long	2

The numbers underlined indicate new parts which do not appear on the illustration.

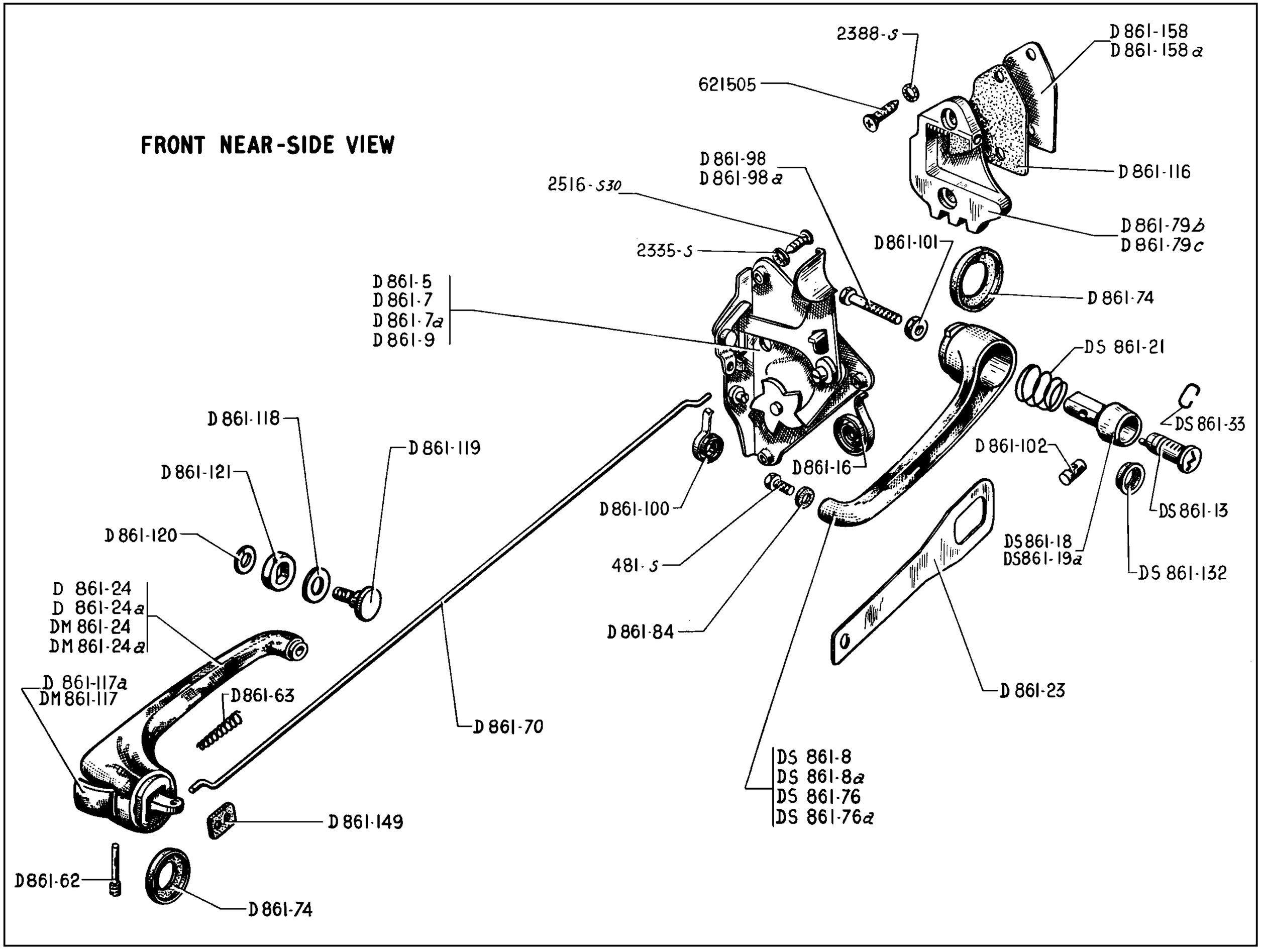
FRONT NEAR-SIDE VIEW
2388-S
D 861-158
D 861-158 a
621505
D 861-116
D 861-98
D 861-98 a
2516-S30
D 861-79 b
D 861-79 c
2335-S
D 861-101
D 861-74
D 861-5
D 861-7
D 861-7a
D 861-9
DS 861-21
DS 861-33
D 861-118
D 861-119
D 861-102
D 861-121
D 861-16
D 861-100
DS 861-13
D 861-120
DS 861-18
DS 861-19a
481-S
DS 861-132
D 861-24
D 861-24a
DM 861-24
DM 861-24a
D 861-84
D 861-117a
DM 861-117
D 861-63
D 861-23
D 861-70
DS 861-8
DS 861-8a
DS 861-76
DS 861-76a
D 861-149
D 861-62
D 861-74

NUMBER	DESCRIPTION	No. OFF
DS 861-04b	Locking barrel for front door (R. VI). Since April 1963.	2
D 861-5	Lock for front door, R.H. with safety catch (R. VI). Until April 1963.	1
D 861-7	Lock for rear door, L.H. (R. VI).	1
D 861-7a	Lock for front door, L.H. with safety catch (R. VI).	1
DS 861-8	Handle, external, for rear door, L.H. (complete).	1
DS 861-8a	Handle, external, for rear door, R.H. (complete).	1
D 861-9	Lock for rear door, R.H. (R. VI).	1
DS 861-13	*Set of 4 locking barrels (5 wards), for L.H. and R.H. front doors, upper door of boot, and ignition, switch (R. VI). Until April 1963. Replaced by DS 861-13b; order in addition: 3-DS 861-18b (R. VI), 3-DS 861-102a (R. VI).*	1
DS 861-13b	Set of 4 locking barrels, for L.H. and R.H. front doors, rear upper door boot door and ignition switch (R. VI). Since April 1963.	1
D 861-16	Return spring for door lock lever (R. VI).	4
DS 861-18	*Push-button on front door (R. VI). Until April 1963. Replaced by 1-DS 861-18b (R. VI), 1-DS 861-102a (R. VI).*	2
DS 861-18b	Push-button on front door (R. VI). Since April 1963.	2
DS 861-19a	Push-button on rear door (R. VI).	2
DS 861-21	Return spring for push-button in door handle.	4
D 861-23	Locking plate for securing external handle, 178 mm long, one slotted hole 24.5 mm diameter; one hole 7.5 mm diameter.	4
D 861-24	Handle, internal, for L.H. door. U.S.A.	2
D 861-24a	Handle, internal, for R.H. door. U.S.A.	2
DM 861-24	Handle, internal, for L.H. door.	2
DM 861-24a	Handle, internal, for R.H. door.	2
DS 861-33	Circlip for lock barrel (R. VI).	1
D 861-62	Locking pin for internal handle safety catch.	4
D 861-63	Return spring for internal handle locking pin safety catch.	4
D 861-70	Connecting rod for remote control, 700 mm long.	4
D 861-74	Washer, rubber, 25 x 42, with shoulder, for external and internal door handles.	8
DS 861-76	Handle, external (without fittings), for front and rear L.H. doors.	2
DS 861-76a	Handle, external (without fittings), for front and rear R.H. doors.	2
D 861-79b	Striking plate for front and rear L.H. doors, securing holes 48 mm between centres (3 teeth) (R. VI).	2
D 861-79c	Striking plate for front and rear R.H. doors, securing holes 48 mm between centres (3 teeth) (R. VI).	2
D 861-84	Washer, fibre, 7.5 x 17 x 1, for rear of external handle (R. VI).	4
D 861-98	Screw, for adjusting push-button in front door handle, 16 mm long under head.	2
D 861-98a	Screw, for adjusting push-button in rear door handle, 51 mm long under head.	2
D 861-100	Spring for safety catch (R. VI).	4
D 861-101	Nut, hex., 5 diameter x 75 pitch, for locking push-button regulating screw on door handle.	4
D 861-102	Locking pin for barrel lock in front door handle (R. VI). Until April 1963.	2
DS 861-102a	Locking pin for barrel lock in front door handle (R. VI). Since April 1963.	2
D 861-116	Striking plate on central and rear pillars, 48 mm between centres of fixing holes (R. VI).	4
D 861-117a	Locking catch (chromium plated), for safety lock on internal handle. U.S.A.	4
DM 861-117	Locking catch (nylon), for safety lock on internal handle (R. VI).	4
D 861-118	Washer, fibre, 10.5 x 26 x 1, for rear of internal handle (R. VI).	4
D 861-119	Screw, for securing internal handle 14 mm long, 24 mm wide head.	4
D 861-120	Washer, 6.4 x 15, for screw securing internal handle (R. VI).	4
D 861-121	Locking collar for internal door handle.	4
DS 861-132	Cup for holding push-button (R. VI).	4
D 861-149	Plate, anti-rattle, 13 x 8, for remote control rod.	8
D 861-158	Plate for adjusting striking plates on front and rear doors, 2 mm thick (R. VI).	As nec.
D 861-158a	Plate for adjusting striking plates on front and rear doors, 3 mm thick (R. VI).	As nec.
DS 861-160	Clip holding stop-rod for front door. Since December 1964.	2
DS 861-174	Bearing for stop-rod on rear door. Since December 1964.	2
481-S	Screw, hex. head, 7 diameter x 10 mm long, for securing external handle (R. III).	2
2.335-S	Washer, shakeproof, concave, 5.2 diameter for screw securing lock (R. VI).	12
2.388-S	Washer, shakeproof, 7.2 x 14 x 0.35 for securing striking plate (R. VI).	8
2.516-S 30	Screw, raised countersunk head, 5 x 16 for securing the lock (R. VI).	12
618.749	Rivet securing clip holding stop-rod (R. VI). Since December 1964.	2
621.505	Screw, round head, 7 diameter x 27.5 mm long, for securing striking plate (R. VI).	8

The numbers underlined indicate new parts which do not appear on the illustration.

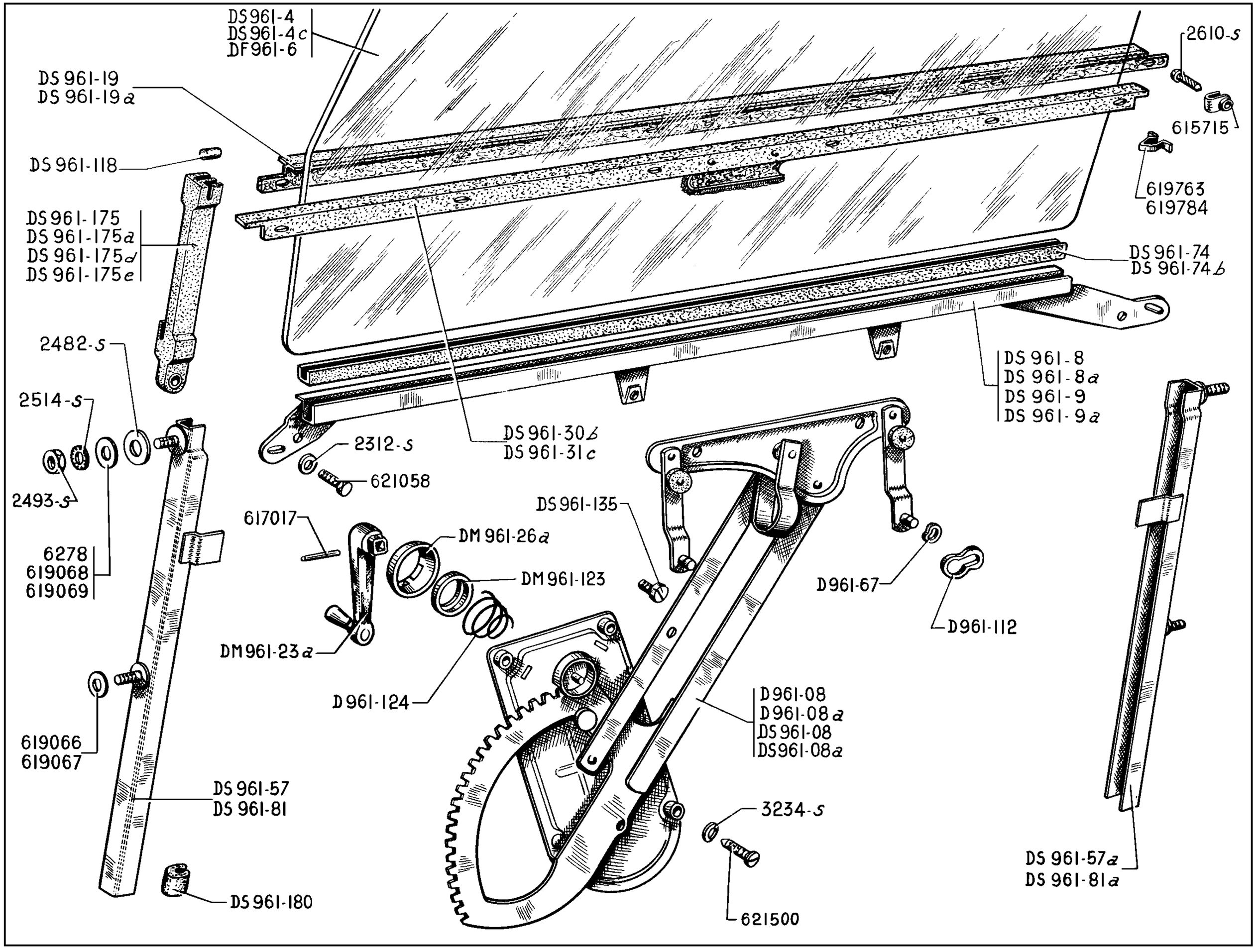
DS 961-4
DS 961-4c
DF 961-6
DS 961-19
DS 961-19a
DS 961-118
DS 961-175
DS 961-175a
DS 961-175d
DS 961-175e
2482-s
2514-s
2493-s
6278
619068
619069
619066
619067
DS 961-57
DS 961-81
DS 961-180
2312-s
621058
DS 961-30b
DS 961-31c
617017
DM 961-26a
DM 961-123
DM 961-23a
D 961-124
DS 961-135
D 961-67
D 961-112
D 961-08
D 961-08a
DS 961-08
DS 961-08a
3234-s
621500
2610-s
615715
619763
619784
DS 961-74
DS 961-74b
DS 961-8
DS 961-8a
DS 961-9
DS 961-9a
DS 961-57a
DS 961-81a

NUMBER	DESCRIPTION	No. OFF
	Glass, front, 4 mm thick. Until June 62.	
	Glass, front, 5 mm thick. Since June 62.	
	Glass, rear, 4 mm thick.	
D 961-08	*Window winder, "Dura", twin arm, for left-hand door (R. VI). Replaced by DS 961-08d.*	2
D 961-08a	Window winder, "Dura", twin arm, for right-hand door (R. VI).	2
DS 961-08	*Window winder, "Vachette", twin arm, for left-hand door (R. VI). 2nd possibility. Replaced by DS 961-08d.*	2
DS 961-08a	*Window winder, "Vachette", twin arm, for right-hand door (R. VI). 2nd possibility. Replaced by DS 961-08e.*	2
DS 961-4	Glass for front door (R. VI). Until June 1962.	2
DS 961-4c	Glass for front door, 5 mm thick (R. VI). Since June 1962.	2
DF 961-6	Glass for rear door (R. VI).	2
DS 961-8	Bottom channel for front L.H. door glass, distance between securing centres 736 mm.	1
DS 961-8a	Bottom channel for front R.H. door glass, distance between securing centres 736 mm.	1
DS 961-9	Bottom channel for rear L.H. door glass, distance between securing centres 793 mm.	1
DS 961-9a	Bottom channel for rear R.H. door glass, distance between securing centres 793 mm.	1
DS 961-19	*Sealing strip, inner, for front door glass, 741 mm long (R. VI). Until April 1965. Replaced by DS 961-19b.*	2
DS 961-19a	*Sealing strip, inner, for rear door glass, 797 mm long (R. VI). Until April 1965. Replaced by DS 961-19c.*	2
DS 961-19b	Sealing strip, inner, for front door glass, 760 mm long (R. VI). Since April 1965.	2
DS 961-19c	Sealing strip, inner, for rear door glass, 810 mm long (R. VI). Since April 1965.	2
DM 961-23a	Window winder handle, grey knob.	4
DM 961-26a	Escutcheon on window winder handle, 45 mm diameter (R. VI).	4
DS 961-30b	Sealing strip, outer, for front door glass, 777 mm long.	2

NUMBER	DESCRIPTION	No. OFF
DS 961-31c	Sealing strip, outer, for rear door glass, 835 mm long.	2
DS 961-57	Glass guide, 540 mm long, 2 welded studs, 280 mm between centres:	
	- front of rear door, L.H.	1
	- rear of rear door, R.H.	1
DS 961-57a	Glass guide, 540 mm long, 2 welded studs, 280 mm between centres:	
	- front of rear door, R.H.	1
	- rear of rear door, L.H.	1
D 961-67	Washer, flexible, 10.9 x 19.02, for window winder on glass bottom channel (R. VI).	8
DS 961-74	Seal, rubber, for door glass, 737 mm long x 8 mm external diameter x 4 mm internal diameter.	4
	Until June 1962.	4
	Since June 1962.	2
DS 961-74b	Seal, rubber, for door glass, 737 mm long (marked white paint). Since June 1962.	2
DS 961-81	Glass guide, 570 mm long, 2 welded studs, 280 mm between centres:	
	- front of front L.H. door.	1
	- rear of front R.H. door.	1
DS 961-81a	Glass guide, 570 mm long, 2 welded studs, 280 mm between centres:	
	- front of front R.H. door.	1
	- rear of front L.H. door.	1
D 961-112	Lockwasher for securing window winder on glass bottom channel (R. VI).	8
DS 961-118	*Wedge, rubber, upper, 3.5 x 6, for glass slide. No longer supplied.*	8

NUMBER	DESCRIPTION	No. OFF
DM 961-123	Washer, friction, for window winder handle escutcheon, 21 x 44 x 5.3.	4
D 961-124	Spring, for window winder handle, 32 mm and 45 mm internal diameters.	4
DS 961-135	Stop, adjustable, for window winder (R. VI).	4
DS 961-175	Glass slide (nylon), 158 mm long (R. VI):	
	- front of L.H. front and rear doors.	2
	- rear of R.H. front and rear doors.	2
	For front doors. Until June 1962.	
DS 961-175a	Glass slide (nylon), 158 mm long (R. VI):	
	- front of R.H. front and rear doors.	2
	- rear of L.H. front and rear doors.	2
	For front doors. Until June 1962.	
DS 961-175d	Glass slide, 5 mm thick for front door, 158 mm long (R. VI). - front L.H. and rear R.H. Since June 1962.	2
DS 961-175e	Glass slide, 5 mm thick, for front door, 158 mm long (R. VI). - front R.H. and rear L.H. Since June 1962.	2
DS 961-180	Protector, rubber, for rear door glass guide, 30 mm long (R. VI).	4
2.312-S	Washer, 5.5 x 9, for securing glass bottom channel (R. III).	8
2.482-S	Washer, plain, 7.5 x 14, for securing upper end of glass guide (R. III).	4
2.493-S	Nut, hex., 7 diameter x 100 pitch, for locking glass guide (R. III).	8
2.514-S	Washer, shakeproof, 7.3 x 12, for glass guide stud (R. VI).	8
2.610-S	Screw, Parker, 3.5 diameter x 15 mm long, for securing outer sealing strip (R. VI).	8
3.234-S	Washer, cupped, 6 mm diameter, for securing window winder (R. III).	8

The numbers underlined indicate new parts which do not appear on the illustration.

NUMBER	DESCRIPTION	No. OFF
6.278	Washer, 7.5 x 20 x 2, for adjusting upper end of glass guide (R. IV).	As nec.
615.715	Nut, self-locking, for screw securing external sealing strip (R. VI).	8
617.017	Cotter pin, 3 diameter x 20.5 mm long, for securing window winder handle (R. IV).	4
619.066	Washer, 7.5 x 30 x 1, for adjusting lower end of glass guide (R. IV).	As nec.
619.067	Washer, 7.5 x 30 x 2, for adjusting lower end of glass guide (R. IV).	As nec.
619.068	Washer, 7.5 x 20 x 0.5, for adjusting upper part of glass guide (R. IV).	As nec.
619.069	Washer, 7.5 x 20 x 1, for adjusting upper part of glass guide (R. II).	As nec.
619.763	Clip for securing inside sealing strip on door glass (R. VI).	24
619.784	Clip for securing outside sealing strip on door glass (R. VI).	24
621.055	Screw, hex. head, 5 x 11, for securing the winder assembly (R. I).	16
621.058	Screw, hex. head, 5 diameter x 9 mm long, for securing slide on glass channel (R. IV).	8
621.500	*Screw, knurled head, 5 diameter x 12.5 mm long, for securing winder assembly (R. VI). Replaced by 621.055.*	16

The numbers underlined indicate new parts which do not appear on the illustration.

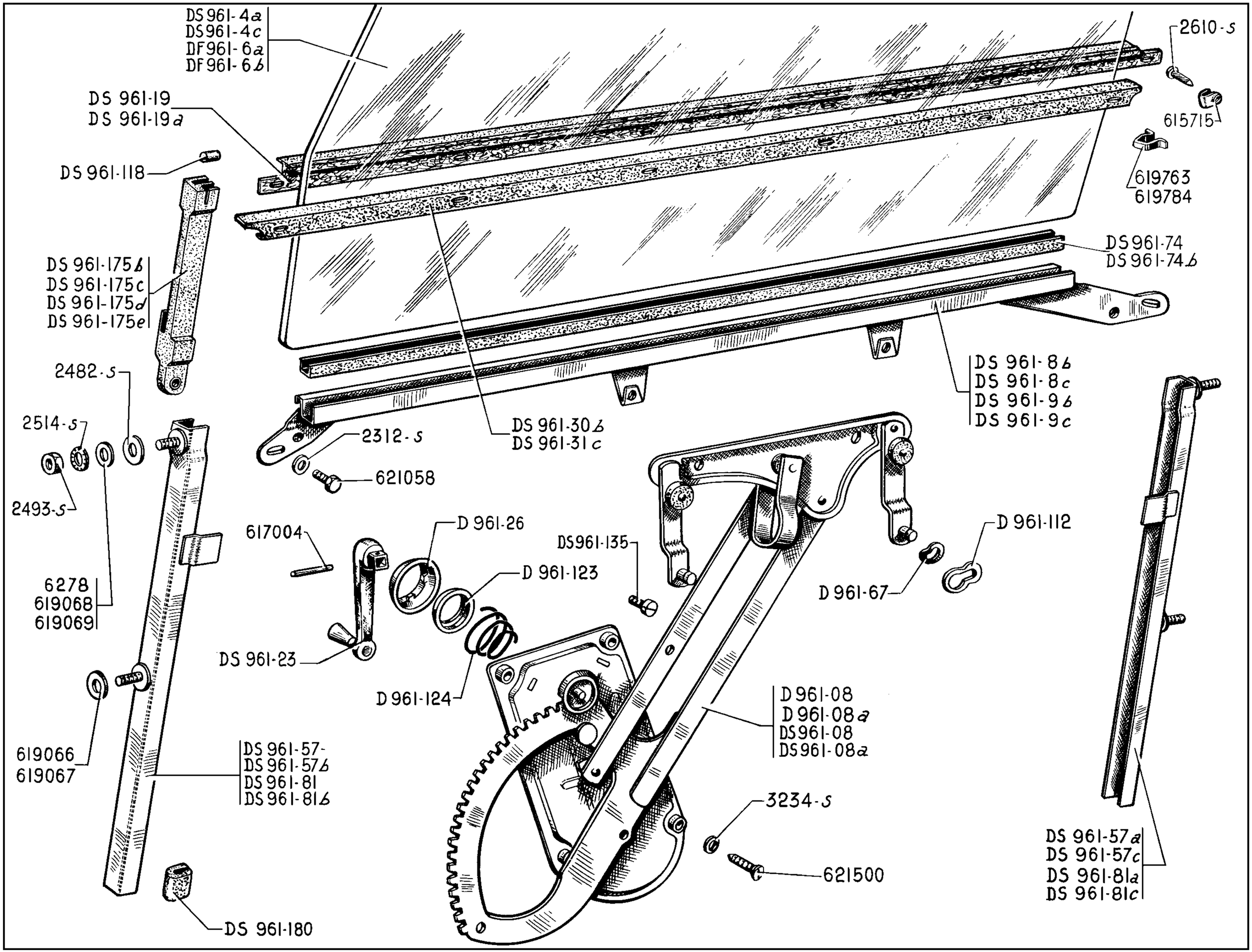
DS 961-4a
DS 961-4c
DF 961-6a
DF 961-6b
DS 961-19
DS 961-19a
DS 961-118
DS 961-175b
DS 961-175c
DS 961-175d
DS 961-175e
2482-s
2514-s
2493-s
6278
619068
619069
619066
619067
DS 961-57-
DS 961-57b
DS 961-81
DS 961-81b
DS 961-180
2312-s
621058
DS 961-30b
DS 961-31c
617004
D 961-26
D 961-123
DS 961-23
D 961-124
DS961-135
2610-s
615715
619763
619784
DS 961-74
DS 961-74b
DS 961-8b
DS 961-8c
DS 961-9b
DS 961-9c
D 961-112
D 961-67
D 961-08
D 961-08a
DS 961-08
DS 961-08a
3234-s
621500
DS 961-57a
DS 961-57c
DS 961-81a
DS 961-81c

NUMBER	DESCRIPTION	No. OFF
	Glass thickness 6 mm. Until December 1961.	
	Glass thickness 5 mm. Since December 1961.	
D 961-08	*Window winder, "Dura", twin arm, for L.H. door (R. VI). Replaced by DS 961-08d.*	1
D 961-08a	Window winder, "Dura", twin arm, for R.H. door (R. VI).	1
DS 961-08	*Window winder, "Vachette", twin arm, for L.H. door (R. VI). Replaced by DS 961-08d.*	2
DS 961-08a	*Window winder, "Vachette", twin arm, for R.H. door (R. VI). Replaced by DS 961-08e.*	2
DS 961-4a	*Glass for front door (R. VI). Until December 1961. Replaced by DS 961-4c; order in addition: 1-DS 961-81, 1-DS 961-81a, 1-DS 961-74b, 1-DS 961-175d (R. VI), 1-DS 961-175e (R. VI).*	2
DS 961-4c	Glass for front door (R. VI). Since December 1961.	2
DF 961-6a	*Glass for rear door (R. VI). Until December 1961. Replaced by DF 961-6b; order in addition: 1-DS 961-74b, 1-DS 961-57, 1-DS 961-57a, 1-DS 961-175d (R. VI), 1-DS 961-175e (R. VI).*	2
DF 961-6b	Glass for rear door (R. VI). Since December 1961.	2
DS 961-8b	*Bottom channel for front L.H. door glass, distance between securing centres 736 mm. Replaced by DS 961-8.*	1
DS 961-8c	Bottom channel for front R.H. door glass, distance between securing centres 736 mm.	1
DS 961-9b	*Bottom channel for rear L.H. door glass, distance between securing centres 793 mm. Replaced by DS 961-9.*	1
DS 961-9c	*Bottom channel for rear R.H. door glass, distance between securing centres 793 mm. Replaced by DS 961-9a.*	1

NUMBER	DESCRIPTION	No. OFF
DS 961-19	*Sealing strip, inner, for front door glass, 741 mm long (R. VI). Until April 1965. Replaced by DS 961-19b.*	2
DS 961-19a	*Sealing strip, inner, for rear door glass, 797 mm long (R. VI). Until April 1965. Replaced by DS 961-19c.*	2
DS 961-19b	Sealing strip, inner, for front door glass, 760 mm long (R. VI). Since April 1965.	2
DS 961-19c	Sealing strip, inner, for rear door glass, 810 mm long (R. VI). Since April 1965.	2
DS 961-23	Window winder handle, white knob.	4
D 961-26	Escutcheon on window winder handle, 45 mm diameter (R. VI).	4
DS 961-30b	Sealing strip, outer, for front door glass, 777 mm long.	2
DS 961-31c	Sealing strip, outer, for rear door glass, 835 mm long.	2
DS 961-57	Glass guide, 540 mm long, 2 welded studs, 280 mm between centres:	
	- front of rear R.H. door.	1
	- rear of rear L.H. door.	1
	Since December 1961.	
DS 961-57a	Glass guide, 540 mm long, 2 welded studs, 280 mm between centres:	
	- front of rear L.H. door.	1
	- rear of rear R.H. door.	1
	Since December 1961.	
DS 961-57b	Glass guide, 540 mm long, 2 welded studs, 280 mm between centres:	
	- front of rear L.H. door.	1
	- rear of rear R.H. door.	1
	Until December 1961.	
DS 961-57c	Glass guide, 540 mm long, 2 welded studs, 280 mm between centres:	
	- front of rearR.H. door.	1
	- rear of rear L.H. door.	1
	Until December 1961.	
D 961-67	Washer, flexible, 10.9 x 19.02, for window winder on glass bottom channel (R. VI).	8

NUMBER	DESCRIPTION	No. OFF
DS 961-74	Seal, rubber, for door glass, 737 mm long x 8 mm external diameter x 4 mm internal diameter. Until December 1961.	4
DS 961-74b	Seal, rubber, for door glass, 737 mm long (marked white paint). Since December 1961.	4
DS 961-81	Glass guide, 570 mm long, 2 welded studs 280 mm between centres:	
	- front of front L.H. door.	1
	- rear of front R.H. door.	1
	Since December 1961.	
DS 961-81a	Glass guide, 570 mm long, 2 welded studs 280 mm between centres:	
	- front of front R.H. door.	1
	- rear of front L.H. door.	1
	Since December 1961.	
DS 961-81b	Glass guide, 570 mm long, 2 welded studs 280 mm between centres:	
	- front of front L.H. door.	1
	- rear of front R.H. door.	1
	Until December 1961.	
DS 961-81c	Glass guide, 570 mm long, 2 welded studs 280 mm between centres:	
	- front of front R.H. door.	1
	- rear of front L.H. door.	1
	Until December 1961.	
D 961-112	Lockwasher for securing window winder on glass bottom channel (R. VI).	8
DS 961-118	*Wedge, rubber, upper, 3.5 x 6, for glass slide. No longer supplied.*	8
D 961-123	Washer, friction, for winding handle escutcheon, 21 x 44 x 5.3.	4
D 961-124	Spring for window winder handle, 32 mm and 45 mm internal diameters.	4
DS 961-135	Stop, adjustable, for window winder (R. VI).	4

The numbers underlined indicate new parts which do not appear on the illustration.

NUMBER	DESCRIPTION	No. OFF
DS 961-175b	Glass slide (nylon), 158 mm long (R. VI):	
	- front of L.H. front and rear doors.	2
	- rear of R.H. front and rear doors.	2
	Until December 1961.	
DS 961-175c	Glass slide, (nylon), 158 mm long (R. VI):	
	- front of R.H. front and rear doors.	2
	- rear of L.H. front and rear doors.	2
	Until December 1961.	
DS 961-175d	Glass slide (nylon), 158 mm long (R. VI):	
	- front of L.H. front and rear doors.	2
	- rear of R.H. front and rear doors.	2
	Since December 1961.	
DS 961-175e	Glass slide (nylon), 158 mm long (R. VI):	
	- front of R.H. front and rear doors.	2
	- rear of L.H. front and rear doors.	2
	Since December 1961.	
DS 961-180	Protector, rubber, for rear glass slide, 30 mm long (R. VI).	4

NUMBER	DESCRIPTION	No. OFF
2.312-S	Washer, 5.5 x 9, for securing glass bottom channel (R. III).	8
2.482-S	Washer, plain, 7.5 x 14, for securing upper end of glass guide (R. III).	4
2.493-S	Nut, hex., 7 diameter x 100 pitch, for locking glass guide (R. III).	8
2.514-S	Washer, shakeproof, 7.3 x 12, for glass guide stud (R. VI).	8
2.610-S	Screw, Parker, 3.5 diameter x 15 mm long, for securing outer sealing strip (R. VI).	8
3.234-S	Washer, cupped, 6 mm diameter, for securing window winder (R. III).	8
6.278	Washer, 7.5 x 20 x 2, for adjusting upper end of glass guide (R. IV).	As nec.
615.715	Nut, self-locking, for screw securing external sealing strip (R. VI).	8
617.017	Pin, cylindrical, 3 diameter x 20.5 mm long, for securing handle on window winder (R. IV).	4

NUMBER	DESCRIPTION	No. OFF
619.066	Washer, 7.5 x 30 x 1, for adjusting lower end of glass guide (R. IV).	As nec.
619.067	Washer, 7.5 x 30 x 2, for adjusting lower end of glass guide (R. IV).	As nec.
619.068	Washer, 7.5 x 20 x 0.5, for adjusting upper end of glass guide (R. IV).	As nec.
619.069	Washer, 7.5 x 20 x 1, for adjusting upper end of glass guide (R. II).	As nec.
619.763	Clip for securing inside sealing strip on door glass (R. VI).	24
619.784	Clip for securing outside sealing strip on door glass (R. VI).	24
621.055	Screw, hex. head, 5 x 11, for securing the winder assembly (R. I).	16
621.058	Screw, hex. head. 5 diameter x 9 mm long, for securing slide on glass channel (R. IV).	8
621.500	*Screw, knurled head, 5 diameter x 12.5 mm long, for securing winder plate (R. VI). Replaced by 621.055.*	16

The numbers underlined indicate new parts which do not appear on the illustration.

NUMBER	TYPE	Holes drilled for controls					REMARKS
		Windscreen Washer	Heating front	Heating rear	Manual ignition control	Parking light	
				IN FRENCH Until September 1960			
DA 822-65	AMBULANCE	with	with	without	with	with	
DB 822-65	CONFORT	with	without	without	with	with	
DC 822-65	COMMERCIAL	without	without	without	with	with	
				September 1960 - April 1962			
DA 822-65b	AMBULANCE	with	with	without	with	with	
DM 822-65p	COMMERCIAL	without	without	without	with	with	
DM 822-65r	CONFORT	with	without	without	with	with	
DM 822-65s	CONFORT	with	with	with	with	with	Cold Climates
DM 822-65w	CONFORT	with	without	without	with	without	ITALY
DM 822-65x	CONFORT	with	with	without	with	without	ITALY
				April 1962 - September 1964.			
DM 822-82	CONFORT	with	with	with	without	with	Cold Climates
DM 833-82a	AMBULANCE	with	with	without	without	with	
DM 822-82d	CONFORT	with	without	without	without	with	
DM 822-82e	COMMERCIAL	without	without	without	without	with	
DM 822-82f	CONFORT	with	without	without	without	without	ITALY
DM 822-82g	CONFORT	with	with	without	without	without	ITALY
				IN ENGLISH Until September 1960			
DM 822-140	CONFORT	with	without	without	with	without	No longer supplied.
				September 1960 - April 1962			
DM 822-65c	CONFORT	with	with	without	with	without	
				April 1962 - September 1964.			
DM 822-82b	CONFORT	with	with	with	without	without	
DM 822-82c	CONFORT	with	with	without	without	without	
				IN SPANISH Until April 1962			
DM 822-65z	CONFORT	with	with	without	with	without	
				April 1962 - September 1964.			
DM 822-82h	CONFORT	with	with	without	without	without	

NUMBER	TYPE	Holes drilled for controls						REMARKS
		Windscreen Washer	Heating front	Heating rear	Manual ignition control	Ventilation blower	Parking light	
				IN ENGLISH Until September 1960				
DM 822-65f	CONFORT	with	with	with	with	without	with	
				September 1960 - April 1962				
DM 822-65v	CONFORT	with	without	without	with	without	with	
				April 1962 - September 1964.				
DM 822-115a	LUXE	without	without	without	without	without	with	
DM 822-115b	CONFORT	with	with	without	without	without	with	
DM 822-115c	CONFORT	with	without	without	without	without	with	
				February 1963 - September 1964.				
DM 822-115e	CONFORT	with	with	without	without	with	with	
DM 822-115f	CONFORT	with	with	with	without	with	with	

NUMBER	DESCRIPTION	No. OFF
	Until September 1964	
DM 651-3a	Cover for glove box.	1
DM 822-03b	Protection panel, lower, on scuttle shelf.	1
DM 822-04	*Cover for bracket for electrical and mechanical controls (R. VI). Until September 1962. Replaced by DM 822-04b (R. VI); order in addition: 1-DM 822-67c.*	1
DM 822-04b	Cover for bracket for electrical and mechanical controls (R. VI). Since September 1962.	1
DM 822-05	Surround for speedometer (R. VI).	1
DM 822-13b	Cover, centre of facia panel (radio set).	1
DM 822-52	Buffer, rubber, supporting facia panel.	1
DA 822-53	Cover for centre of facia panel. AMBULANCE.	1
DM 822-53	Cover for centre of facia panel. (Except AMBULANCE).	1
DM 822-54e	Facia panel (centre part). Until September 1960.	1
DM 822-54f	Facia panel (centre part). Since September 1960.	1
DM 822-64	Clip for securing upper L.H. facia panel (centre part).	1
DM 822-67	Finishing fitting for passage of gear change lever. Until September 1962.	1

NUMBER	DESCRIPTION	No. OFF
DM 822-67c	Finishing fitting for passage of gear change lever. Since September 1962.	1
DM 822-75	Fitting, rubber, for lower protection panel.	1
DM 822-76b	*Bracket for electrical and mechanical controls (beneath steering column). Until September 1962. Replaced by DM 822-76e.*	1
DM 822-76e	Bracket for electrical and mechanical controls (beneath steering column). Since September 1962.	1
DM 822-141	Facia panel, with finishing. Until September 1962.	1
DM 822-141c	Facia panel, upper, with finishing and reinforcement for rear mirror. Since September 1962.	1
DM 853-69a	Finishing strip between windscreen and facia panel (without bracket).	1
DM 853-76a	Finishing plate under scuttle shelf, with securing clamp. Since September 1962.	1
DM 853-78	*Finishing plate under facia panel, 1157 mm long. Until September 1962. Replaced by DM 853-76a.*	1
DS 984-3	Sealing strip, rubber, for finishing strip at windscreen (sold by the metre) (R. VI). Until January 1963.	As nec.
DS 984-3a	*Sealing strip, rubber, for finishing strip at windscreen (sold by the metre) (R. VI). Since January 1963. Replaced by DS 984-3b.*	As nec.
DS 984-3b	Sealing strip, rubber, for finishing strip at windscreen, 2800 mm long (R. VI). Since January 1963.	As nec.

NUMBER	DESCRIPTION	No. OFF
	BOLTS, NUTS AND WASHERS FOR FIXING	
2.323-S	Nut, hex., 5 x 75, for securing buffer (R. III).	1
615.712	Nut, self-locking, for securing (R. VI):	
	- upper facia panel.	3
	- speedometer surround.	2
615.714	Nut, self-locking, for securing cover on centre of facia panel (R. VI).	2
615.715	Nut, self-locking, for securing cover for electrical and mechanical controls bracket (R. VI).	2
2.312-S	Washer, flat, 5.5 x 9, for securing (R. III):	
	- centre facia panel.	3
	- upper facia panel.	3
	- lower protection panel.	3
2.334-S	Washer, shakeproof, 5.2 x 9.4, for securing centre bracket (R. VI).	5
619.022	Washer, flat, for screw securing buffer (R. IV).	1
2.499-S	Screw, Parker, for securing cover for electrical and mechanical controls bracket (R. VI).	2
2.508-S	Screw, raised countersunk head, 4.85 x 16, for securing speedometer surround (R. VI).	2

The numbers underlined indicate new parts which do not appear on the illustration.

NUMBER	DESCRIPTION	No. OFF
	Since September 1964	
D 175-92	Rubber stop.	1
DM 334-120	Rubber trimming with finishing strip for passage of change gear lever.	1
DW 334-127	Clip for securing finishing strip (R. VI).	1
DW 334-127a	Clip securing finishing strip (R. VI).	3
DM 334-138	Finishing strip for passage of change gear lever.	1
DW 334-211	Rubber finishing strip for gear change lever (R. VI).	1
DM 822-5	Facia board, upper, with finishing, left-hand.	1
DM 822-5a	Facia board, upper, with finishing, right-hand.	1
DM 822-5b	Facia board, upper, with finishing, for front heating, right-hand.	1
DW 822-5	Facia board, upper, with finishing, for front heating, left-hand.	1
DM 822-6a	Facia board, upper (central part), with finishing.	1
DM 822-8	Speedometer surround.	1
DM 822-8b	Speedometer surround, heating front and rear.	1

NUMBER	DESCRIPTION	No. OFF
DM 822-24	Facia board, lower, with hole for parking switch, right-hand.	1
DM 822-24a	Facia board, lower, with holes for switches of front heating and parking lights, right-hand.	1
DM 822-24b	Facia board, lower, with holes for switches for front and rear heating and parking lights, right-hand.	1
DM 822-24c	Facia board, lower, right-hand. ITALY.	1
DM 822-24d	Facia board, lower, with hole for front heating, right-hand. ITALY.	1
DM 822-24e	Facia board, lower, with holes for front and rear heating and ventilation, right-hand. ITALY.	1
DM 822-24f	Facia board, lower, with holes for parking light switches, front heating and ventilation, right-hand.	1
DM 822-41	Bright trim between facia board and speedometer surround, 757 mm long (R. VI).	1
DM 822-44a	Cover for electrical control bracket.	1
DW 822-52	Rubber strip for facia bracket, upper part, 15 mm high (R. VI).	4
DW 822-52a	Rubber strip for facia bracket, lateral part, 11 mm high (R. VI).	4

NUMBER	DESCRIPTION	No. OFF
DM 822-57	Support connecting facia board, upper and lower.	1
DM 822-59a	Facia board, lower, with holes for front and rear heating, left-hand.	1
DW 822-60	Support for rubber stop on facia board.	1
DW 822-62	Anti-rattle strip between facia board and bridge piece (40 x 20 x 0.8).	3
DM 822-63	Finishing for direction indicator holes.	1
DW 822-76a	Brackets for electrical controls.	1
DW 822-80	Rubber finishing strip for direction indicator holes.	2
DW 822-83	Strip for electrical control bracket and cover, 135 mm long.	2
DW 822-99	Finishing strip between facia and cover, 105 mm long (R. VI).	1
DM 822-123	Clip for securing finishing on speedometer surround (R. VI).	8
DM 822-130	Finishing strip for speedometer surround. LUXE.	1
DM 822-130a	Finishing strip for speedometer surround. CONFORT.	1
DM 822-135	Finishing strip, lower, for speedometer surround (R. VI).	1
DM 822-136	Finishing strip, upper, for speedometer surround (R. VI).	1

258B—FACIA SCUTTLE TRIMMING (LEFT-HAND STEERING)

NUMBER	DESCRIPTION	No. OFF
DM 822-165	Bright trim between facia board and speedometer surround, 112 mm long (R. VI).	1
DM 853-69b	Finishing panel between windscreen and facia board.	1
DM 853-75	Clip for securing finishing panel.	1
DM 853-76b	Finishing panel under scuttle.	1
2.334-S	Washer, shakeproof, 5.2 x 9.4 (R. VI). for securing:	
	- facia board.	2
	- support stop.	2
2.319-S	Nut, hex., 5 x 75, for securing:	
	- facia board.	2
	- support stop.	2

NUMBER	DESCRIPTION	No. OFF
2.756-S	Screw, Parker, 3 x 10, for securing facia board, upper (R. VI).	2
615.710	Nut, clip (R. VI) for securing:	
	- facia board.	2
	- speedometer surround.	3
	- finishing strip.	1
615.725	Nut in cage for securing finisher (R. VI).	2
619.133	Washer, 5.25 x 15 x 1.5 for securing:	
	- facia board.	2
	- bracket for electrical controls.	2
	- support stop.	2
619.502	Washer, cup, for securing facia board.	2

NUMBER	DESCRIPTION	No. OFF
619.755	Clip for securing trimming on facia board (R. VI).	1
619.796	Clip for securing bright trim on facia board (R. VI).	5
621.506	Screw, raised countersunk head, 5 x 20 (R. VI) for securing:	
	- finishing panel.	6
	- finisher.	2
621.512	Screw, raised countersunk head, 4.85 x 15.9 for securing finisher (R. VI).	2
621.515	Screw, raised countersunk head, 4.85 x 16 for securing bracket on facia board (R. VI).	2

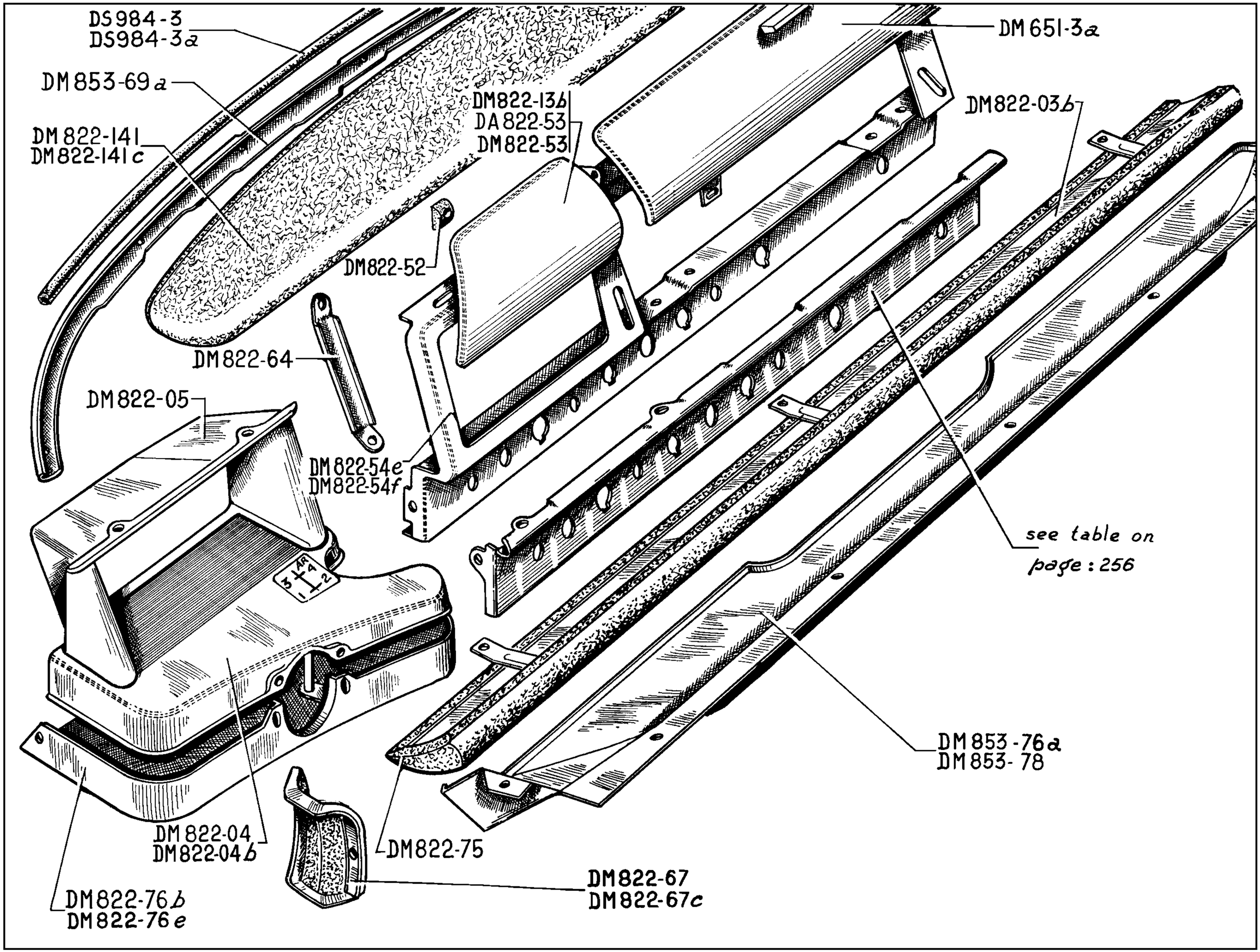
DS984-3
DS984-3a
DM853-69a
DM822-141
DM822-141c
DM822-13b
DA822-53
DM822-53
DM651-3a
DM822-03b
DM822-52
DM822-64
DM822-05
DM822-54e
DM822-54f
see table on page: 256
DM853-76a
DM853-78
DM822-04
DM822-04b
DM822-75
DM822-67
DM822-67c
DM822-76b
DM822-76e

259A-FACIA BOARD (LEFT HAND STEERING)

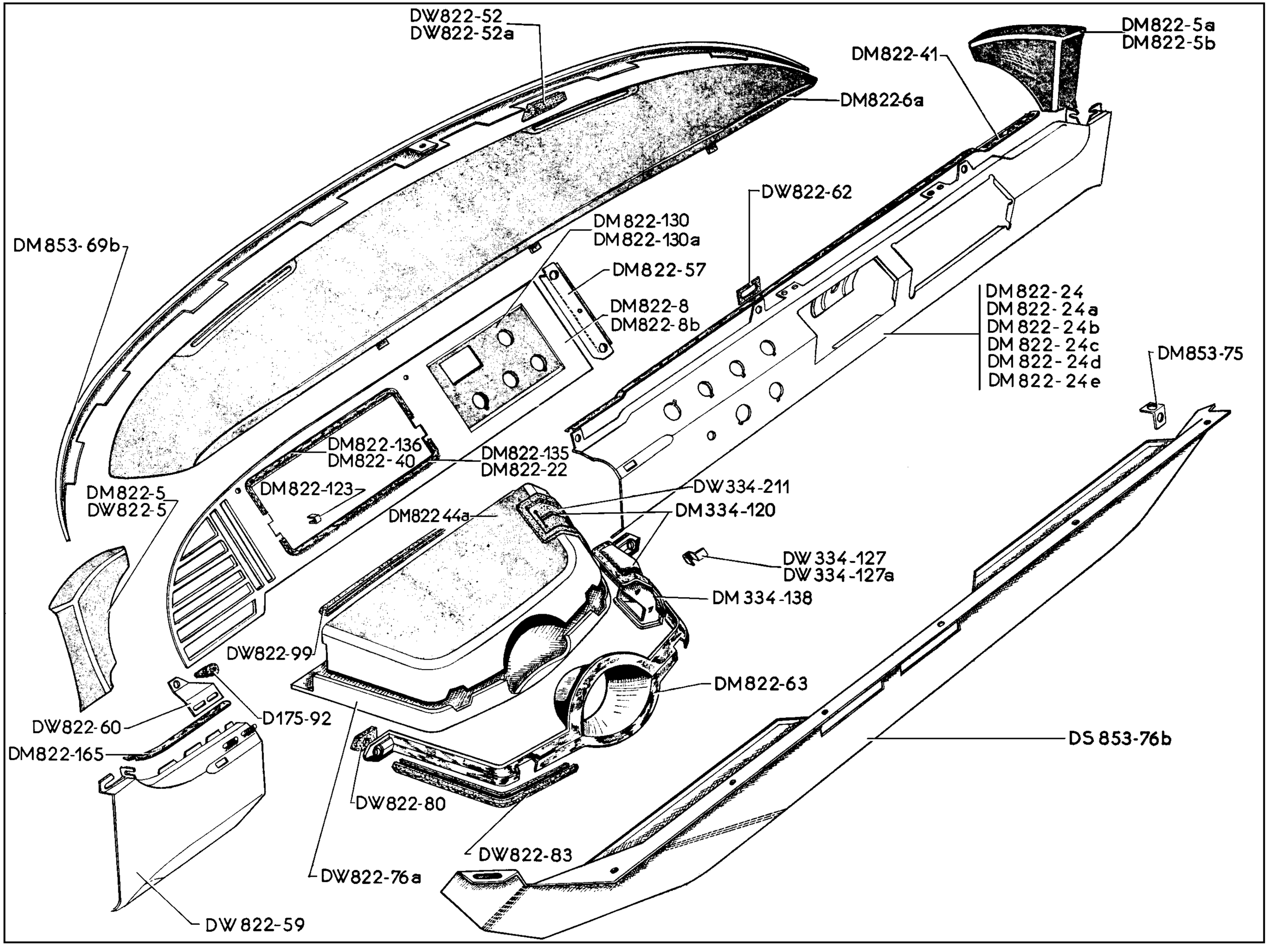

NUMBER	DESCRIPTION	No. OFF
	Since September 1964	
D 175-92	Rubber buffer.	1
DM 334-120	Rubber trim with finisher for passage of gear change lever.	1
DW 334-127	Clip for securing trim and finisher (R. VI).	1
DW 334-127a	Clip for securing trim and finisher (R. VI).	3
DM 334-138	Finisher for passage for gear change lever.	1
DW 334-211	Rubber trim and finisher for gear change lever (R. VI).	1
DM 822-5	Facia panel, upper, with trimming, left-hand.	1
DM 822-5a	Facia panel, upper, with trimming, right-hand.	1
DM 822-5b	Facia panel, upper, with trimming, for front heating, right-hand.	1
DW 822-5	Facia panel, upper, with trimming, for front heating, left-hand.	1
DM 822-6a	Facia panel, upper (central part) with trimming.	1
DM 822-8	Speedometer surround.	1
DM 822-8b	Speedometer surround, front and rear heating.	1

NUMBER	DESCRIPTION	No. OFF
DM 822-22	Trimming, lower, with clips, on speedometer surround (R. VI).	1
DM 822-24	Facia panel, lower, with hole for parking light switch, right-hand.	1
DM 822-24a	Facia panel, lower, with holes for switches for front heating and parking lights, right-hand.	1
DM 822-24b	Facia panel, lower, with holes for switches for front and rear heating and parking lights, right-hand.	1
DM 822-24c	Facia panel, lower, right-hand. ITALY.	1
DM 822-24d	*Facia panel, lower, with hole for front heating, right-hand. ITALY. Replaced by DM 822-24.*	1
DM 822-24e	Facia panel, lower, with holes for front and rear heating and ventilation blower, right-hand. ITALY.	1
DM 822-40	Trimming, upper, with clips on speedometer surround (R. VI).	1
DM 822-41	Embellishing trimming between instrument panel and speedometer surround, 757 mm long (R. VI).	1
DM 822-44a	Cover for electrical control bracket.	1
DW 822-52	Flexible packing for facia panel support, upper part, 15 mm high (R. VI).	4
DW 822-52a	Flexible packing for instrument panel support, lateral part, 11 mm high (R. VI).	4

NUMBER	DESCRIPTION	No. OFF
DM 822-57	Support between panel, upper and lower parts.	1
DM 822-59a	Facia panel, lower, with holes for front and rear heating, left-hand.	1
DW 822-60	Support for rubber buffer for panel.	1
DW 822-62	Sound deadening packing between panel and stud (40 x 20 x 0.8).	3
DM 822-63	Finisher for steering passage.	1
DW 822-76a	Electrical control bracket.	1
DW 822-80	Rubber packing for finisher on steering passage.	2
DW 822-83	Trim for assembly of electrical control bracket and cover, 135 mm long.	2
DW 822-99	Finishing trim between panel and cover, 105 mm long (R. VI).	1
DM 822-123	Clip securing trim on speedometer surround (R. VI).	8
DM 822-130	Finishing trim for speedometer surround. LUXE.	1
DM 822-130a	Finishing trim for speedometer surround. CONFORT.	1
DM 822-135	*Trimming, lower, for speedometer surround (R. VI). Replaced by DM 822-22.*	1
DM 822-136	*Trimming, upper, for speedometer surround (R. VI). Replaced by DM 822-40.*	1

259C-FACIA BOARD (LEFT-HAND STEERING)

NUMBER	DESCRIPTION	No. OFF
DM 822-165	Embellishing trim between panel and speedometer surround, 112 mm long (R. VI).	1
DF 853-64	Finisher for heat group, right-hand.	1
DM 853-69b	Finishing panel between windscreen and facia.	1
DM 853-75	Clip securing trimming.	1
DS 853-76b	Finishing panel under scuttle.	1
	BOLTS, NUTS AND WASHERS FOR FIXING	
619.755	Clip securing trimming on panel (R. VI).	1
619.796	Clip securing embellishing trim on panel (R. VI).	5
2.319-S	Nut, hex., 5 x 75 for securing:	
	- facia panel.	2
	- buffer support.	2
615.725	Nut in cage for securing finisher (R. VI).	2
615.710	Nut clip (R. VI) for securing:	
	- instrument panel.	2
	- speedometer surround.	3
	- finisher.	1
2.334-S	Washer, shakeproof, 5.2 x 9.4 (R. VI) for securing:	
	- facia panel.	2
	- buffer supports.	2
619.133	Washer, 5.25 x 15 x 1.5 for securing:	
	- facia panel.	2
	- nut for control bracket.	2
	- buffer support.	2
619.502	Washer, cupped, for securing instrument panel.	2
2.756-S	Screw, Parker, 3 x 10, for securing upper panel (R. VI).	2
621.506	Screw, raised countersunk head, 5 x 20 (R. VI) for securing:	
	- trimming.	6
	- finisher.	2
621.512	Screw, raised head countersunk, 4.85 x 15.9 for securing finisher (R. VI).	2
621.515	Screw, raised head countersunk, 4.85 x 16 for securing support for panel (R. VI).	2

The numbers underlined indicate new parts which do not appear on the illustration.

260-FACIA BOARD (RIGHT HAND STEERING)

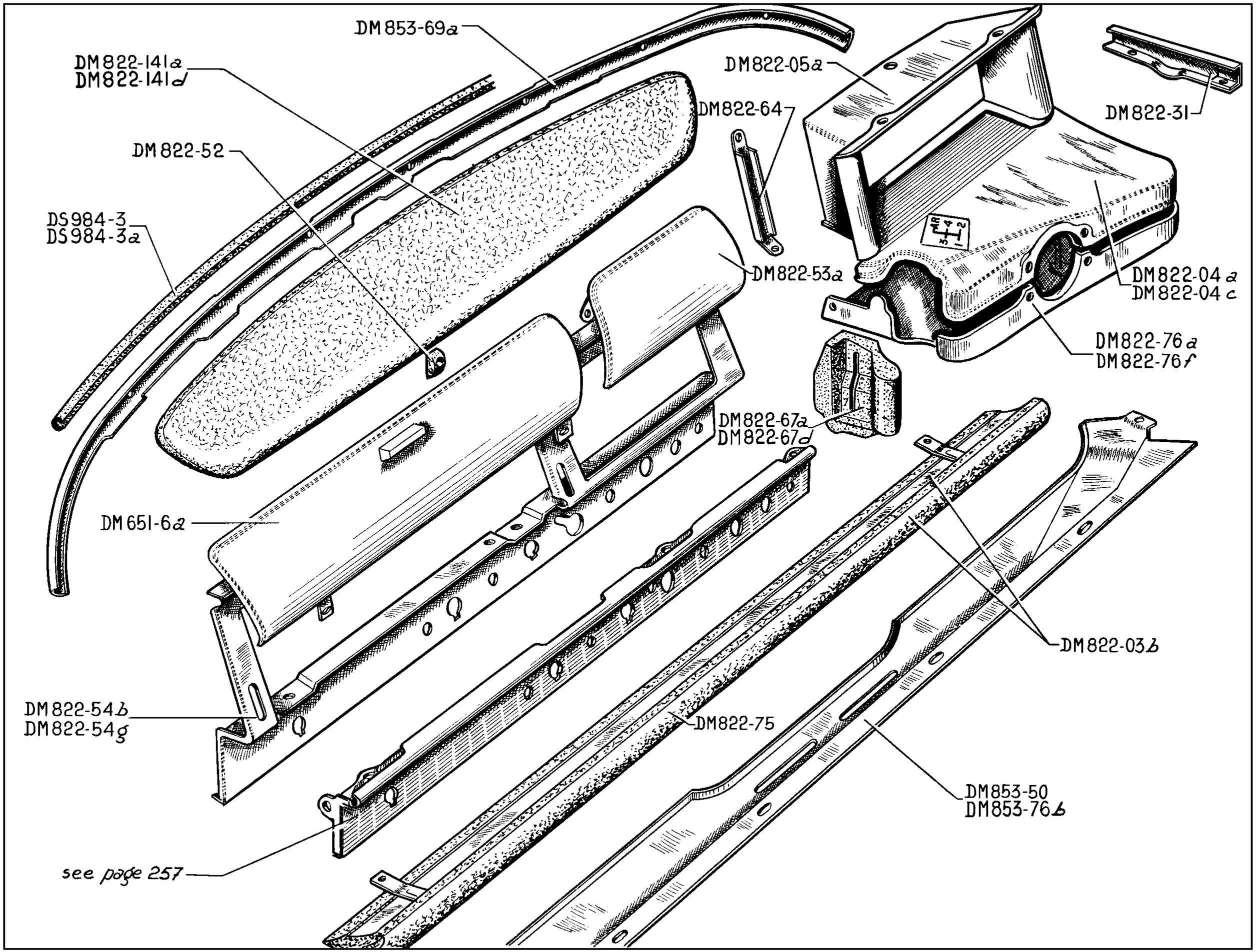

NUMBER	DESCRIPTION	No. OFF
	Until September 1964	
DM 651-6a	Cover for glove box.	1
DM 822-03b	Protection panel, lower, on scuttle shelf.	1
DM 822-04a	*Cover for bracket for electrical and mechanical controls (R. VI). Until September 1962. Replaced by DM 822-04c; order in addition: 1-DM 822-67d.*	1
DM 822-04c	Cover for bracket for electrical and mechanical controls. Since September 1962.	1
DM 822-05a	Surround for speedometer (R. VI).	1
DM 822-31	Panel, finishing, between grille and speedometer surround.	1
DM 822-52	Buffer, rubber, supporting facia panel.	1
DM 822-53a	Cover for centre of facia panel.	1
DM 822-54b	Facia panel (centre part). Until September 1960.	1
DM 822-54g	Facia panel (centre part). Since September 1960.	1
DM 822-64	Plate fixing upper left of panel (centre part).	1
DM 822-67a	Finishing fitting for passage of gear change lever. Until September 1962.	1
DM 822-67d	Finishing fitting for passage of gear change lever. Since September 1962.	1

NUMBER	DESCRIPTION	No. OFF
DM 822-75	Fitting, rubber, for lower protection panel.	1
DM 822-76a	*Bracket for electrical and mechanical controls (beneath steering column). Until July 1962. Replaced by DM 822-76f.*	1
DM 822-76f	Bracket for electrical and mechanical controls (beneath steering column). Since July 1962.	1
DM 822-141a	Facia panel, upper. Until September 1962.	1
DM 822-141d	Facia panel, upper. Since September 1962.	1
DM 853-50	*Finishing plate, beneath facia panel, 1.157 m long. Until September 1962. Replaced by DM 853-76b.*	1
DM 853-69a	Finishing strip between windscreen and facia panel (without bracket).	1
DM 853-76b	Finishing plate, beneath facia panel, with reinforcement and finishing. Since September 1962.	1
DS 984-3	Sealing strip, rubber, for finishing strip at windscreen (sold by the metre) (R. VI). Until January 1963.	As nec.
DS 984-3a	*Sealing strip, rubber, for finishing strip at windscreen, (sold by the metre) (R. VI). Since January 1963. Replaced by DS 984-3b.*	As nec.
DS 984-3b	Sealing strip, rubber, for finishing strip at windscreen, 2800 m long (R. VI). Since January 1963.	As nec.

NUMBER	DESCRIPTION	No. OFF
	BOLTS, NUTS AND WASHERS FOR FIXING	
2.323-S	Nut, hex., 5 diameter x 75 pitch, for securing buffer (R. III).	1
615.712	Nut, self-locking, for securing (R. VI):	
	- upper facia panel.	3
	- speedometer surround.	2
615.714	Nut, self-locking, for securing cover on centre of facial panel (R. VI).	2
615.715	Nut, self-locking, for securing cover for electrical and mechanical controls bracket (R. VI).	2
2.312-S	Washer, flat, 5.5 x 9 for securing (R. III):	
	- centre facia panel.	3
	- upper facia panel.	3
	- lower protection panel.	3
2.334-S	Washer, shakeproof, 5.2 x 9.4, for securing centre bracket (R. VI).	5
619.022	Washer, plain, for screw securing buffer (R. IV).	1
2.499-S	Screw, Parker, for securing cover for electrical and mechanical controls bracket (R. VI).	2
2.508-S	Screw, raised countersunk head, 4.85 diameter x 16 mm long, for securing speedometer surround (R. VI).	2

The numbers underlined indicate new parts which do not appear on the illustration.

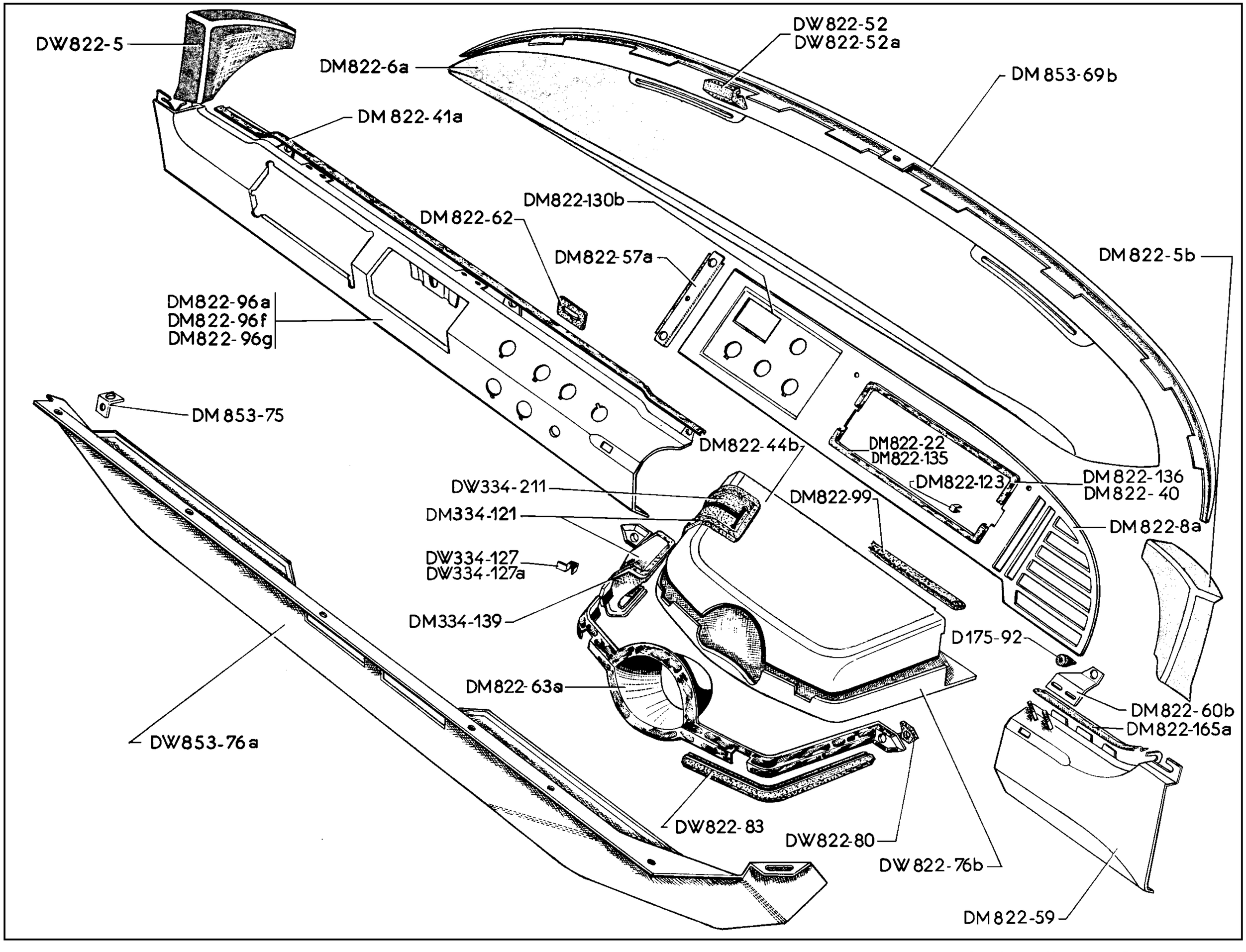
DW822-5
DM822-6a
DM822-41a
DW822-52
DW822-52a
DM853-69b
DM822-130b
DM822-62
DM822-57a
DM822-5b
DM822-96a
DM822-96f
DM822-96g
DM853-75
DM822-44b
DM822-22
DM822-135
DM822-123
DM822-136
DM822-40
DW334-211
DM334-121
DM822-99
DM822-8a
DW334-127
DW334-127a
DM334-139
D175-92
DM822-63a
DM822-60b
DM822-165a
DW853-76a
DW822-83
DW822-80
DW822-76b
DM822-59

NUMBER	DESCRIPTION	No. OFF
	Since September 1964	
D 175-92	Rubber stop.	1
DM 334-121	Rubber trim with finisher for passage of gear change lever.	1
DW 334-127	Clip for securing trim and finisher (R. VI).	1
DW 334-127a	Clip for securing trim and finisher (R. VI).	3
DM 334-139	Finisher for passage of gear change lever.	1
DW 334-211	Rubber trim and finisher for gear change lever (R. VI).	1
DM 822-5b	Facia panel, upper, with trimming, for front heating, right-hand.	1
DW 822-5	Facia panel, upper, with trimming, for front heating, left-hand.	1
DM 822-6a	Facia panel, upper (central part) with trimming.	1
DM 822-8a	Speedometer surround.	1
DM 822-22	Trimming, lower, with clips, on speedometer surround (R. VI).	1
DM 822-40	Trimming, upper, with clips on speedometer surround (R. VI).	1

NUMBER	DESCRIPTION	No. OFF
DM 822-41a	Embellishing trimming between instrument panel and speedometer surround, 757 mm long (R. VI).	1
DM 822-44b	Cover for electrical control bracket.	1
DW 822-52	Flexible packing for facia panel support, upper part, 15 mm high (R. VI).	4
DW 822-52a	Flexible packing for instrument panel support, lateral part, 11 mm high (R. VI).	4
DM 822-57a	Support between panel, upper and lower parts.	1
DM 822-59	Facia panel, lower, with holes for front and rear heating, right-hand.	1
DM 822-60b	Support for rubber buffer for panel.	1
DM 822-62	*Sound deadening packing between panel and stud (40 x 20 x 0.8). Replaced by DW 822-62.*	3
DW 822-62	Sound deadening packing between panel and stud (40 x 20 x 0.8).	3
DM 822-63a	Finisher for steering passage.	1
DW 822-76b	Electrical control bracket.	1
DW 822-80	Rubber packing for finisher on steering passage.	2
DW 822-83	Trim for assembly of electrical control bracket and cover, 135 mm long.	2

NUMBER	DESCRIPTION	No. OFF
DM 822-96a	Facia panel, lower, with hole for parking light, left-hand.	1
DM 822-96f	Facia panel, lower, with holes for parking light, front heater and ventilation blower, left-hand.	1
DM 822-96g	Facia panel, lower, with holes for parking lights, front and rear heating, ventilation blower, left-hand.	1
DM 822-99	*Finishing trim between panel and cover, 105 mm long (R. VI). Replaced by DW 822-99.*	1
DW 822-99	Finishing trim between panel and cover, 105 mm long (R. VI).	1
DM 822-123	Clip securing trim on speedometer surround (R. VI).	8
DM 822-130b	Trimming for speedometer surround.	1
DM 822-135	*Trimming, lower, for speedometer surround (R. VI). Replaced by DM 822-22.*	1
DM 822-136	*Trimming, upper, for speedometer surround (R. VI). Replaced by DM 822-40.*	1
DM 822-165a	Embellishing trimming between facia panel and speedometer surround, 112 mm long (R. VI).	1
DW 853-48	Trimming panel under scuttle shelf. State colour.	1
DM 853-69b	Finishing panel between windscreen and facia panel.	1
DM 853-75	Clip for securing trimming.	1
DW 853-76a	*Trimming under scuttle shelf. Replaced by DW 853-48.*	1

The numbers underlined indicate new parts which do not appear on the illustration.

NUMBER	DESCRIPTION	No. OFF
	BOLTS, NUTS AND WASHERS FOR FIXING	
619.755	Clip securing trimming on panel (R. VI).	1
2.319-S	Nut, hex., 5 x 75 for securing:	
	- facia panel.	2
	- buffer support.	2
615.710	Nut clip (R. VI), for securing:	
	- instrument panel.	2
	- speedometer surround.	3
	- finisher.	1
615.725	Nut in cage for securing finisher (R. VI).	2
2.334-S	Washer, shakeproof, 5.2 x 9.4 (R. VI) for securing:	
	- facia panel.	2
	- buffer supports.	2
619.133	Washer, 5.25 x 15 x 1.5 for securing:	
	- facia panel.	2
	- nut for control bracket.	2
	- buffer support.	2
619.502	Washer, cupped, for securing instrument panel.	2
2.756-S	Screw, Parker, 3 x 10, for securing upper panel (R. VI).	2
621.506	Screw, raised countersunk head, 5 x 20 (R. VI) for securing:	
	- trimming.	6
	- finisher.	2
621.512	Screw, raised head countersunk, 4.85 x 15.9 for securing finisher (R. VI).	2
621.515	Screw, raised head countersunk, 4.85 x 16 for securing support for panel (R. VI).	1

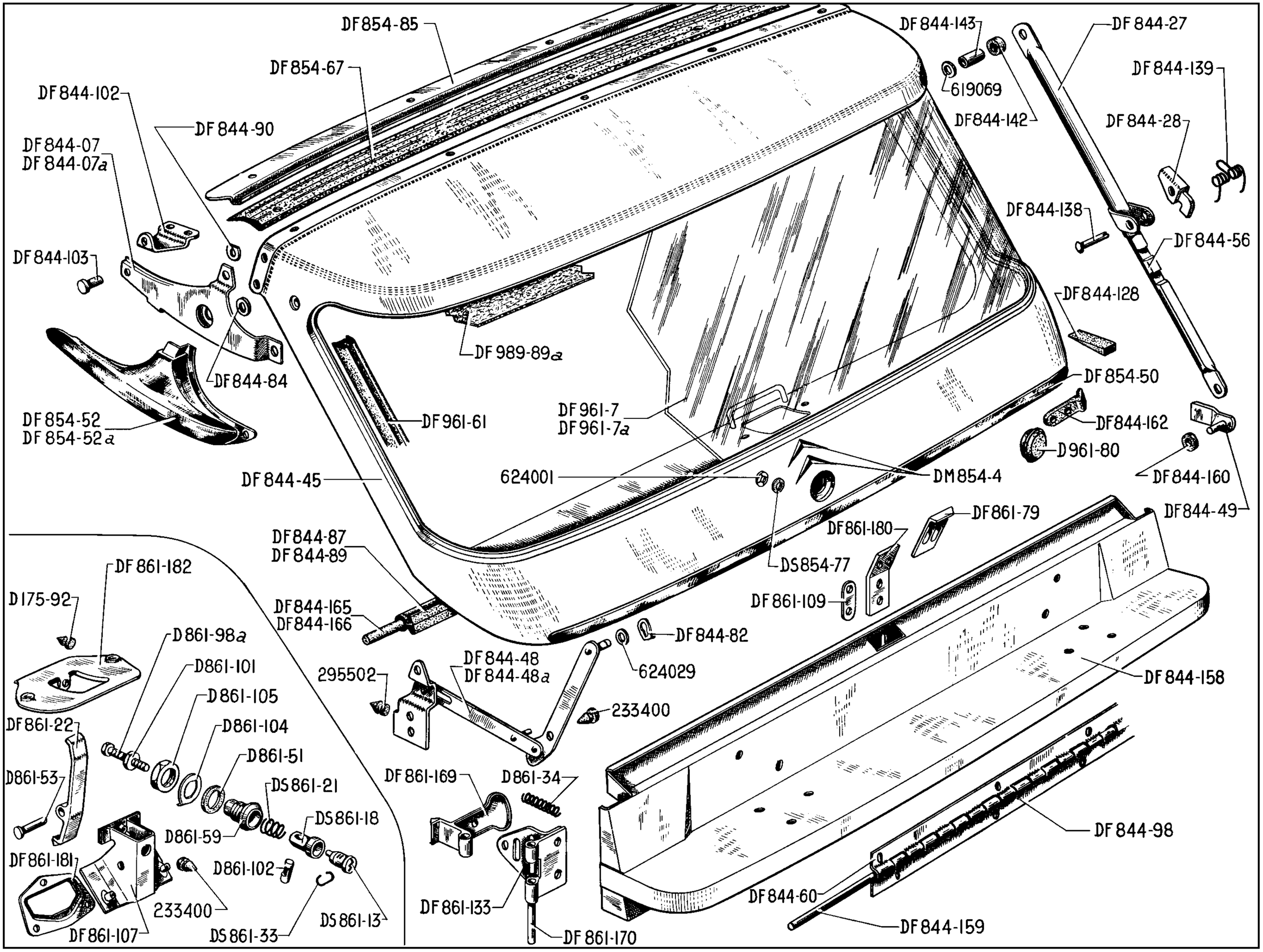
DF854-85
DF854-67
DF844-102
DF844-90
DF844-07
DF844-07a
DF844-103
DF844-84
DF854-52
DF854-52a
DF989-89a
DF961-61
DF844-45
DF961-7
DF961-7a
624001
DF844-143
619069
DF844-142
DF844-27
DF844-139
DF844-28
DF844-138
DF844-56
DF844-128
DF854-50
DF844-162
D961-80
DM854-4
DF844-160
DF844-49
DF861-79
DF861-180
DS854-77
DF861-109
DF844-87
DF844-89
DF844-165
DF844-166
DF844-82
624029
DF844-48
DF844-48a
295502
233400
DF844-158
DF844-98
DF844-60
DF844-159
DF861-169
D861-34
DF861-133
DF861-170
DF861-182
D175-92
D861-98a
D861-101
D861-105
D861-104
D861-51
DS861-21
DS861-18
DF861-22
D861-53
D861-59
DF861-181
D861-102
233400
DF861-107
DS861-33
DS861-13

NUMBER	DESCRIPTION	No. OFF
D 175-92	Buffer, rubber, for lock closing plate.	1
DF 844-07	Hinge, for rear upper door, L.H.	1
DF 844-07a	Hinge, for rear upper door, R.H.	1
DF 844-27	*Stay, female for rear upper door (R. VI). Until January 1965. Replaced by DF 844-169.*	1
DF 844-28	Retaining catch for stay (R. VI).	1
DF 844-45	Door, rear, upper (without fittings).	1
DF 844-48	Hinged bracket, L.H. for rear lower door (R. VI).	1
DF 844-48a	Hinged bracket, R.H. for rear lower door (R. VI).	1
DF 844-49	Bracket with stud for securing stay to body.	1
DF 844-56	Stay, male, for rear upper door (R. VI).	1
DF 844-60	Hinge, upper, for rear lower door, 1080 mm long (R. VI).	1
DF 844-82	Clip for securing hinged bracket on rear panel.	2
DF 844-84	Bush, 7.5 x 25 x 4, for securing hinge on upper rear door.	4
DF 844-87	Sealing strip, outer, for rear upper door, 3300 mm long.	1
DF 844-89	Sealing strip, outer, lower, for rear upper door, 1150 mm long.	1
DF 844-90	Washer, 7.5 x 26 x 4, for securing upper hinge.	6
DF 844-98	Hinge, lower, for rear lower door, 1080 mm long (R. VI).	1

NUMBER	DESCRIPTION	No. OFF
DF 844-102	Bracket for hinge on upper door.	2
DF 844-103	Pin for hinge on upper rear door, 10 mm diameter x 18.5 mm long.	1
DF 844-128	Wedge for sealing upper rear door.	2
DF 844-138	Pin for stay retaining catch (R. VI).	1
DF 844-139	Spring for stay retaining catch (R. VI).	1
DF 844-142	Bush, rubber, 10 x 10.5 x 4, for securing stay (R. VI).	1
DF 844-143	Distance piece, 7.5 x 17 x 10, for securing stay (R. VI).	1
DF 844-158	Door, rear, lower, (without fittings).	1
DF 844-159	Pin for hinge on lower door, 1080 mm long (R. VI).	1
DF 844-160	Washer, rubber, 6.5 x 20 x 4, for securing stay on body (R. VI).	1
DF 844-162	Buffer for locating upper door (R. VI). Since February 1963.	2
DF 844-165	Reinforcement, rubber, interior, upper, for sealing of rear door, 3300 mm long (R. VI).	1
DF 844-166	Reinforcement, rubber, intermediate, lower, for sealing of rear door, 1150 mm long (R. VI).	1
DF 844-169	Female catch with anti rattle spring, (R. VI). Since January 1965.	1
DM 854-4	Chevron on door.	2
DF 854-50	Strip, embellishing, lower, for rear upper door (R. VI).	1
DF 854-52	Strip, finishing, for upper L.H. hinge.	1
DF 854-52a	Strip, finishing, for upper R.H. hinge.	1

NUMBER	DESCRIPTION	No. OFF
DF 854-67	Strip, sealing, rubber, between roof and upper rear door, 1064 mm long.	1
DS 854-77	Sealing washer for chevron.	4
DF 854-85	Strip, finishing, for sealing between roof and upper rear door.	1
DS 861-04b	Lock barrel for rear door (R. VI). Since April 1963.	1
DS 861-13	*Set of 4 locking barrels for front door, front upper door, and ignition (R. VI). Until April 1963. Replaced by DS 861-13b; order in addition: 3-DS 861-18b (R. VI), 3-DS 861-102a (R. VI).*	1
DS 861-13b	Set of 4 locking barrels for front doors, rear upper door, and ignition (R. VI). Since April 1963.	1
DS 861-18	*Push-button (R. VI). Until April 1963. Replaced by DS 861-18b; order in addition: 1-DS 861-35b (R. VI), 1-DS 861-102a (R. VI).*	1
DS 861-18b	Push-button (R. VI). Since April 1963.	1
DS 861-21	Return spring for push-button.	1
DF 861-22	Bolt for lock.	1
DS 861-33	Circlip for lock barrel (R. VI).	1
D 861-34	Return spring for lock bolt, 26 mm long.	1
D 861-51	Washer, rubber, 30 x 36 x 2, for push-button guide.	1
D 861-53	Pin, 6 mm diameter x 25.5 mm long under head, for lock bolt pivot.	1
D 861-59	Guide for push-button, 32 mm long.	1

The numbers underlined indicate new parts which do not appear on the illustration.

NUMBER	DESCRIPTION	No. OFF
DF 861-79	Striking plate for rear door lock (R. VI).	3
D 861-98a	Screw, regulating, 51 mm long under head.	1
D 861-101	Nut, hex., 5 x 75, for locking push-button regulating screw.	1
D 861-102	Retaining pin for lock (R. VI). Until April 1963.	1
DS 861-102a	Retaining pin for lock (R. VI). Since April 1963.	1
D 861-104	Washer, retaining, 28 x 40, for push-button guide.	1
D 861-105	Nut, hex., 30 x 150, for locking push-button guide.	1
DF 861-107	Casing for lock.	1
DF 861-109	Plate, reinforcing, for striking plate on lower door.	1
DF 861-133	Bracket for lock bolt on lower rear door (R. VI).	1
DF 861-169	Lever for lock bolt on lower rear door (R. VI).	2
DF 861-170	Pin, 6 x 63, for pivot of lock bolt on rear lower door (R. VI).	1
DF 861-180	Bracket for striking plate on lock of upper rear door.	1
DF 861-181	Housing for bolt of lock on upper rear door.	1
DF 861-182	Plate, closing, for lock on upper rear door.	1
DF 961-7	*Glass for upper rear door 3 mm thick (R. VI). Replaced by DF 961-7a.*	1
DF 961-7a	Glass for upper rear door, 5 mm thick (R. VI). U.S.A.	1

NUMBER	DESCRIPTION	No. OFF
DF 961-61	Strip, sealing, rubber, for rear upper door.	1
D 961-80	Plug, sealing, for bottom of panel on upper rear door.	4
DF 989-89a	Finisher for upper rear door.	1
	BOLTS, NUTS AND WASHERS FOR FIXING	
106-S 30	Screw, raised countersunk head, 4 x 17, for securing finishing strip for upper door (R. III).	5
480-S	Screw, hex. head, 7 x 14, for securing upper hinge (R. III).	10
486-S 30	Screw, hex. head, 7 x 22.5, for securing lock on lower door (R. III).	4
487-S 30	Screw, hex. head, 7 x 25, for securing hinge on upper door (R. III).	4
489-S	Screw, hex. head, 7 x 30, for securing stay on upper door (R. III).	1
2.262-S	Washer, plain, 4.25 x 10, for finishing strip on roof (R. III).	5
2.269-S	Nut, 4 x 75, for securing (R. III):	
	- finishing strip on roof.	10
	- lower embellishing strip.	5
2.312-S	Washer, flat, 5.5 x 9, for securing reinforcement (R. III).	4
2.334-S	Washer, shakeproof, 5.2 x 9.4, for securing reinforcement (R. VI).	4
2.338	*Screw, hex. head, 5 x 20, for securing hinged bracket on rear panel. Replaced by 284-S.*	6

NUMBER	DESCRIPTION	No. OFF
2.482-S	Washer, flat, 7.5 x 14, for securing lower hinge	5
2.502-S 30	Screw, round head, 5 x 12, for striking plate bracket on lower rear door (R. VI).	2
2.514-S	Washer, shakeproof, 7.3 x 12, for securing lock (R. VI).	4
2.516-S 30	Screw, raised countersunk head, 5 x 16, for securing lock closing plate (R. VI).	2
2.548-S 30	Screw, round head, 6 x 16.5, for securing lock casing (R. VI).	3
89.840	Washer, plain, 8.5 x 15 x 1.5, for securing hinged bracket	2
233.400	Buffer, rubber, for hinged bracket,	2
295.502	Buffer, rubber, for hinged bracket	2
613.014	Plug, sealing, for holes securing number plate (R. VI).	8
619.069	Washer, 7.5 x 20 x 1, for stay stop on body	1
619.133	Washer, flat, 5.5 x 15 x 1.5, for securing (R. IV):	
	- striking plate.	2
	- hinged bracket.	4
621.072	Screw, hex. head, 5 x 16, for securing reinforcement	4
624.001	Washer, flexible, 4 mm diameter hole, for securing chevron (R. VI).	4
624.029	Washer, flexible, 8.4 x 17 x 2, for securing hinged bracket on lower rear door (R. VI).	2

The numbers underlined indicate new parts which do not appear on the illustration.

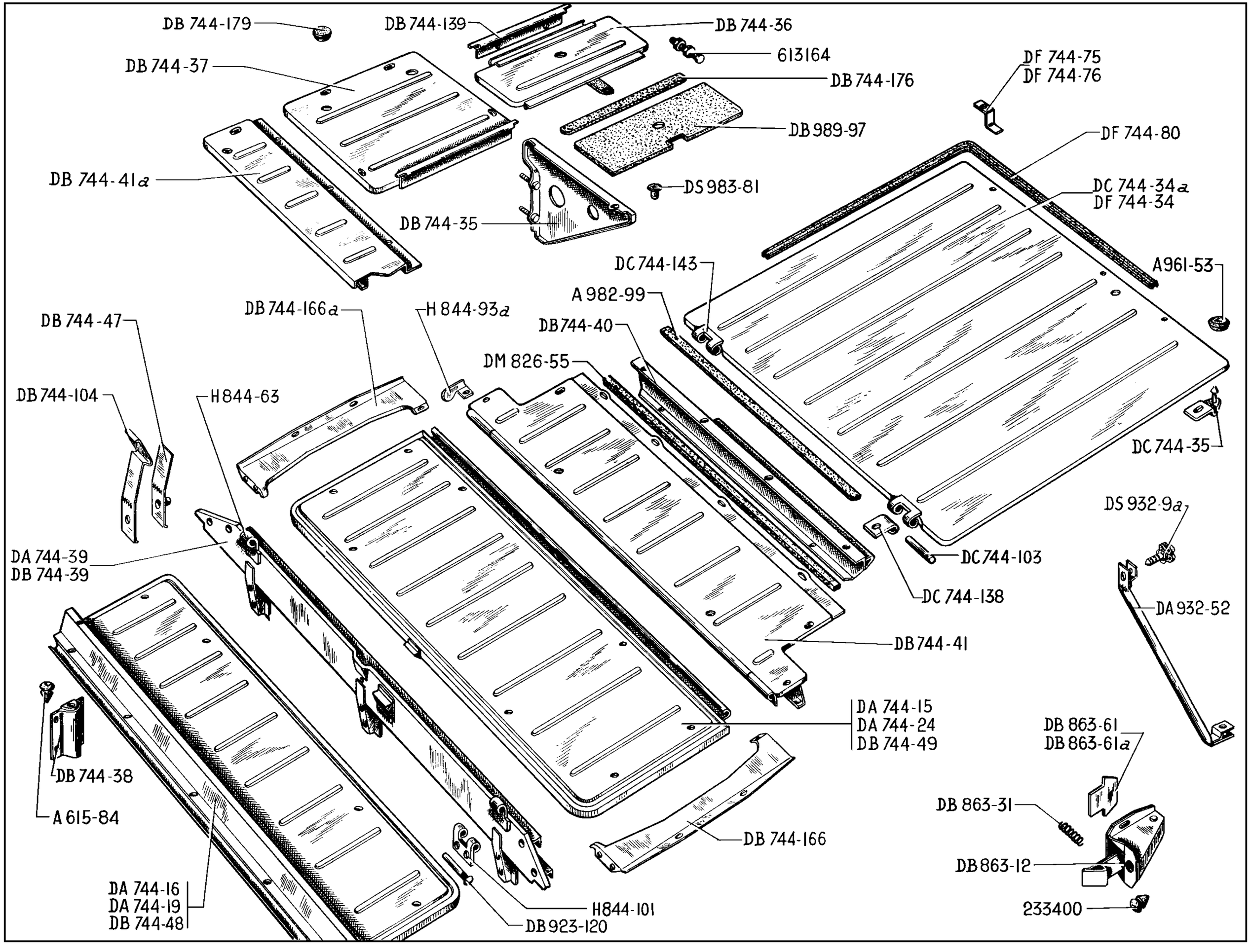
DB 744-179
DB 744-139
DB 744-36
613164
DB 744-37
DB 744-176
DF 744-75
DF 744-76
DB 989-97
DF 744-80
DB 744-41a
DS 983-81
DC 744-34a
DF 744-34
DB 744-35
DC 744-143
A961-53
A 982-99
DB 744-166a
H 844-93a
DB 744-47
DB744-40
DM 826-55
DB 744-104
H844-63
DC 744-35
DS 932-9a
DA 744-39
DB 744-39
DC 744-103
DC 744-138
DA 932-52
DB 744-41
DA 744-15
DA 744-24
DB 744-49
DB 863-61
DB 863-61a
DB 744-38
A 615-84
DB 863-31
DB 744-166
DB863-12
DA 744-16
DA 744-19
DB 744-48
H844-101
DB 923-120
233400

NUMBER	DESCRIPTION	No. OFF
A 615-84	Stop, rubber, for stop support. BREAK, LUXE and COMMERCIAL.	2
A 961-53	Catch for rear floor panel. BREAK. AMBULANCE - COMMERCIAL.	2
A 982-99	Sealing strip, rubber, for rear floor panel (536 x 25 x 10) (R. VI). FAMILY TYPE.	1
DA 744-15	Floor panel, removable, for squab of rear L.H. seat. AMBULANCE.	1
DA 744-16	Floor panel, removable, for rear R.H. cushion. AMBULANCE.	1
DA 744-19	Floor panel, removable, for rear L.H. cushion. AMBULANCE.	1
DA 744-24	Floor panel, removable, for squab of rear R.H. seat. AMBULANCE.	1
DC 744-34a	Floor panel, rear, 829 mm long x 959 mm wide. BREAK. COMMERCIAL. AMBULANCE.	1
DF 744-34	Floor panel, rear, for bottom of boot. FAMILY TYPE.	1
DB 744-35	Bracket for fixed panel. BREAK.	2
DC 744-35	Bracket with retaining catch. BREAK. AMBULANCE - COMMERCIAL.	2
DB 744-36	Floor panel, rear, 415 mm long x 134 mm wide. BREAK.	2
DB 744-37	Floor panel, fixed, rear, 415 mm long x 392 mm wide. BREAK.	2
DB 744-38	Stop support for cushion floor panel. BREAK. LUXE - COMMERCIAL and AMBULANCE.	2
DA 744-39	Crossmember support, hinged, removable, distance between securing holes of hinges 942 mm and 172 mm. AMBULANCE.	1
DB 744-39	*Crossmember support, hinged, removable, distance between securing holes of hinges 942 mm. BREAK. LUXE and COMMERCIAL. Until September 1963. Replaced by DB 744-39a.*	1
DB 744-39a	Crossmember support, hinged, removable, with central hinge. LUXE. COMMERCIAL. CONFORT. Since September 1963.	1
DB 744-40	Crossmember, rear, for intermediate floor panel (between rear seat and fold-up seat.	1
DB 744-41	Floor panel, intermediate, (between rear seat and fold-up seat). BREAK. LUXE and COMMERCIAL.	1
DB 744-41a	Floor panel, intermediate, (between rear seat and fold-up seat). BREAK. CONFORT.	1
DB 744-47	Stop, for retaining spring clip for rear squab removable floor panel (R. VI). BREAK. LUXE and COMMERCIAL.	1
DB 744-48	*Floor panel, removable, for rear cushion. BREAK. LUXE and COMMERCIAL. Until September 1963. Replaced by DB 744-48a.*	1
DB 744-48a	Floor panel, removable, for rear cushion, with central hinge, stop support 69 mm. LUXE. COMMERCIAL. Since September 1963.	1
DB 744-48b	Floor panel, removable, for rear cushion, with central hinge, stop support 35 mm. CONFORT. Since September 1963.	1
DB 744-49	Floor panel, removable, for rear seat squab, BREAK. LUXE and COMMERCIAL.	1
DF 744-75	Clip, lateral, for securing rear floor panel, L.H. FAMILY TYPE.	1
DF 744-76	Clip, lateral, for securing rear floor panel, R.H. FAMILY TYPE.	1
DF 744-80	Sealing strip, rubber, for rear floor panel, 3650 mm long (R. VI). FAMILY TYPE.	1
DC 744-103	Pivot pin for hinge on rear floor panel, 80 mm long (R. VI). COMMERCIAL.	1
DB 744-104	Spring clip for removable floor panel for rear squab. BREAK. LUXE and COMMERCIAL.	1
DC 744-138	Hinge, male, for rear floor panel (R. VI). COMMERCIAL.	1
DB 744-139	Hinge, female, for removable rear panel. BREAK.	2
DC 744-143	Hinge, female, for rear floor panel (R. VI). COMMERCIAL.	1
DB 744-166	Panel, finishing, for removable floor panel of rear seat squab, L.H. BREAK. LUXE and COMMERCIAL.	1
DB 744-166a	Panel, finishing, for removable floor panel of rear seat squab, R.H. BREAK. LUXE and COMMERCIAL.	1
DB 744-176	Strip, rubber, anti-rattle, for rear movable panel, 370 mm long. BREAK.	2
DB 744-179	Buffer, rubber, for rear floor panel (R. VI). BREAK.	4
DM 826-55	Sealing strip, rubber, between front crossmember of rear unit and lower crossmember of body (700 x 20 x 8) (R. VI). FAMILY TYPE.	1
DB 863-12	Catch for squab of rear seat. BREAK. LUXE - COMMERCIAL and AMBULANCE.	2
DB 863-31	Return spring for bolt of catch (R. VI). BREAK, LUXE - COMMERCIAL and AMBULANCE.	2
DB 863-61	Shim for adjusting catch, 2 mm thick, BREAK. LUXE-COMMERCIAL and AMBULANCE.	As nec.
DB 863-61a	Shim for adjusting catch, 1 mm thick. BREAK. LUXE - COMMERCIAL and AMBULANCE.	As nec.

The numbers underlined indicate new parts which do not appear on the illustration.

NUMBER	DESCRIPTION	No. OFF
DB 923-120	Pivot pin for hinge on rear cushion seats. AMBULANCE.	4
DS 932-9a	Screw for locking stay. AMBULANCE.	2
DA 932-52	Stay for rear R.H. squab. AMBULANCE.	1
DS 983-81	Plug, sealing, in floor. COMMERCIAL.	4
DB 989-97	Lining, felt, for movable rear floor panel. BREAK.	2
H 844-63	Hinge, male, for floor panel for cushion. BREAK. LUXE and COMMERCIAL.	2
H 844-93a	Stop for squab hinge. BREAK. LUXE - COMMERCIAL and AMBULANCE.	1
H 844-101	Hinge, female, for removable rear floor panel for cushion. BREAK. LUXE - COMMERCIAL and AMBULANCE.	2

NUMBER	DESCRIPTION	No. OFF
	BOLTS, NUTS AND WASHERS FOR FIXING	
124-S 30	Screw, round head, 5 x 12.5, for securing hinge stop (R. III).	1
155-S 30	Screw, countersunk head, 5 x 15, for securing hinge on floor panel for rear cushion (R. III).	4
2.320-S	Nut, 5 x 75, for locking buffer screw (R. III).	1
2.508-S	Screw, raised countersunk head, 4.85 x 16, for securing buffer support (R. III).	8
2.510-S 30	Screw, raised countersunk head, 5 x 20, for securing squab floor panel and cushion (R. VI).	17
2.548-S 30	Screw, round head, 5 x 16.5, for securing spring stop (R. VI).	1
2.334-S	Washer, shakeproof, 5.2 x 9.4, for securing squab floor panel and cushion (R. III).	17

NUMBER	DESCRIPTION	No. OFF
233.400	Buffer, rubber, for catch (R. IV).	2
613.164	Stud, grooved, for retaining movable floor panel above wheel arch (R. VI).	2
619.067	Washer, 7.5 x 30 x 2, for securing brackets for rear floor panel to sidemember (R. VI).	4
619.122	Washer, 5.5 x 12 x 1, for screw securing rear floor panel (R. III).	13
619.133	Washer, 5.25 x 15 x 1.5 (R. IV). for:	
	- intermediate floor panel and squab.	10
	- catch on rear squab.	4
621.062	Screw, hex. head, 5 x 14, for securing hinged crossmember support (R. IV).	6
621.072	Screw, hex. head, 5 x 16, for securing (R. III):	
	- flooring to body.	13
	- lateral clip.	2

NUMBER	DESCRIPTION	No. OFF
DS 565-117a	Stop, rubber, for wiper arm on lower windscreen surround.	4
DM 961-17	Sealing strip, rubber, at bottom of windscreen.	1
D 961-98	Sealing strip, rubber, for top of windscreen, 2160 mm long (R. VI).	1
DS 961-146	Sealing strip, rubber, for bottom of windscreen, 1550 mm long. Until September 1964.	1

NUMBER	DESCRIPTION	No. OFF
DS 961-146b	Sealing strip, rubber, for bottom of windscreen with 20 mm groove. Since September 1964.	1
DS 961-161b	Surround, lower part, for glass of windscreen, with central securing clip. Until September 1964.	1
DS 961-161c	Surround, lower part, for glass of windscreen without stop clip for windscreen. Since September 1964.	1
D 961-3a	Glass for windscreen "TRIPLEX", (R. VI). U.S.A. L.H. steering.	1

NUMBER	DESCRIPTION	No. OFF
DS 961-3a	Glass for windscreen "LUXRIT" (R. VI). L.H. steering.	1
DS 961-3c	Glass for windscreen "LUXRIT" (R. VI). R.H. steering. Since 1963.	
DS 961-56	Pressure pad, lateral, for windscreen, 50 mm long x 17.5 mm wide x 36 mm high.	2
DS 961-189	Reinforcement, central, for windscreen frame, on scuttle dome.	1
485-S 30	Screw, hex. head, 7 x 20, for securing adjustable lateral support (R. III).	4

NUMBER	DESCRIPTION	No. OFF
DS 616-87	Locking ring for belt on floor (R. VI). Until April 1964.	10
AM 616-87	Locking ring for belt on floor (R. VI). Since April 1964.	10
DS 616-1	Safety harness, 3 strap (R. VI). Except GERMANY.	As nec.
DS 616-1a	Safety harness, 3 strap (R. VI). GERMANY.	As nec.
2.300-S	Nut, hex., 12 x 125, for securing locking ring (R. III). Until April 1964.	6
615.530	Nut, (special) for securing harness ring. Since April 1964.	6

NUMBER	DESCRIPTION	No. OFF
619.634	Eyelet, male and female, for passage of belt on rear carpet (R. VI).	2
DS 616-88	Plate for securing belt to centre pillar.	2
DS 616-97	Plate for securing belt to floor (R.VI).	1
DS 616-94	Washer, 64 x 49.5 x 4, with flat, for reinforcement under floor (R. VI).	4

NUMBER	DESCRIPTION	No. OFF
2.662-S	Washer, flat, 12.5 x 22, for securing locking ring to plate, central part (R. III).	2
2.694-S	Washer, shakeproof, 12.5 x 22, for locking ring (R. VI).	10
621.089	Screw, (chrome head) for securing plate on central pillar, threaded 9 x 125, length under head 22 mm (R. VI).	4

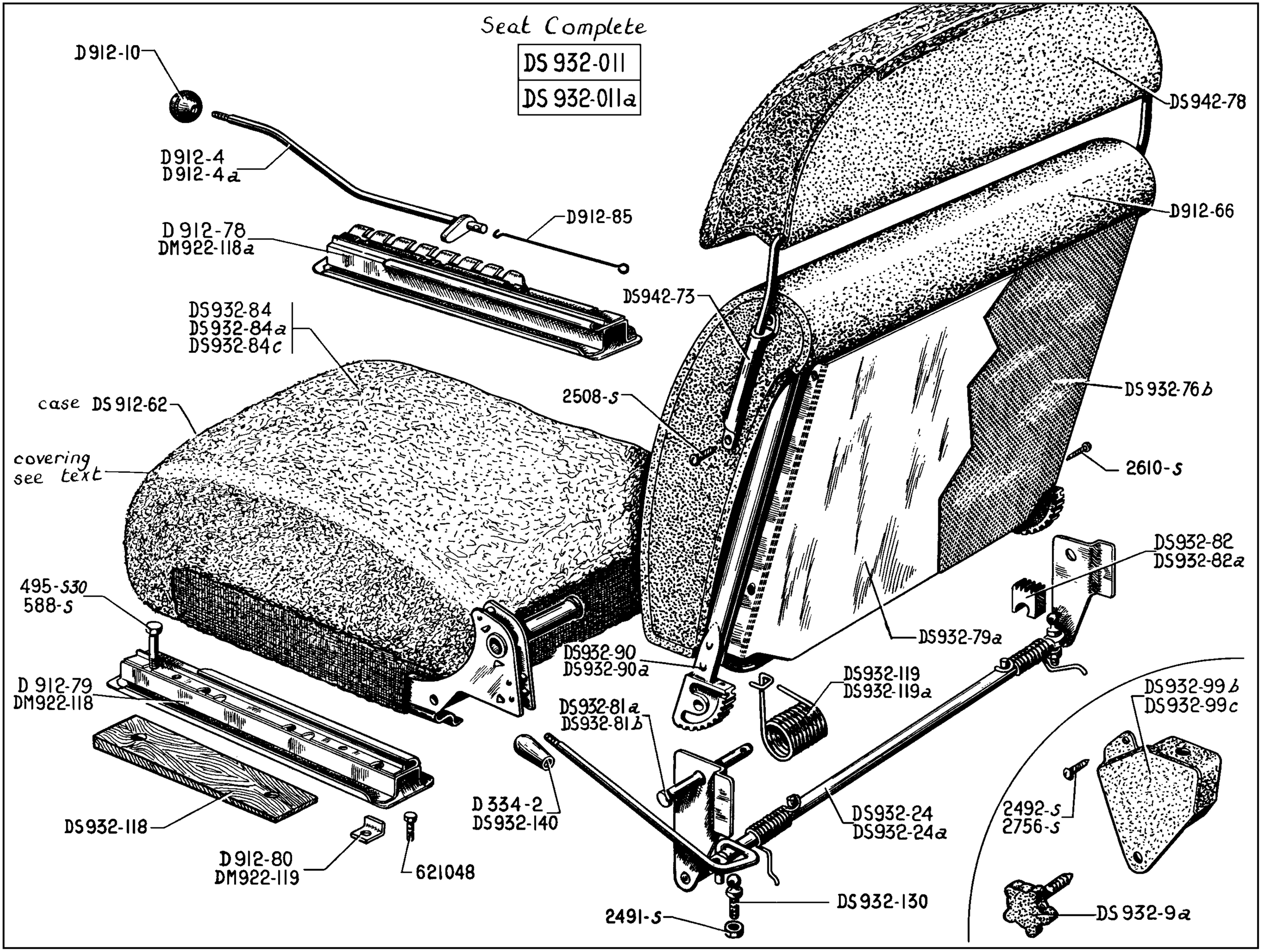
Seat Complete
DS 932-011
DS 932-011a
D912-10
D912-4
D912-4a
D912-85
D912-78
DM922-118a
DS942-78
D912-66
DS942-73
DS932-84
DS932-84a
DS932-84c
case DS 912-62
covering see text
2508-s
DS 932-76b
2610-s
DS932-82
DS932-82a
495-s30
588-s
DS932-79a
DS932-90
DS932-90a
DS932-119
DS932-119a
D 912-79
DM922-118
DS932-81a
DS932-81b
DS932-99b
DS932-99c
D 334-2
DS932-140
DS932-24
DS932-24a
2492-s
2756-s
DS932-118
D912-80
DM922-119
621048
DS 932-130
2491-s
DS 932-9a

NUMBER	DESCRIPTION	No. OFF
	BREAK, CONFORT AND AMBULANCE	
	Until July 1960	
D 912-4	*Lever for locking front seat, 231 mm long. Until December 1959. No longer supplied.*	2
D 912-4a	Lever for locking front seat, 197 mm long. Since December 1959.	2
D 912-10	Knob on locking lever (R. VI).	2
D 912-78	*Bracket, R.H. for front seat. Until December 1959. No longer supplied.*	2
D 912-79	Bracket, L.H. for front seat. Until December 1959.	2
D 912-80	Stop for front seat. Until December 1959.	2
D 912-85	Return spring for locking lever.	2
DM 922-118	Bracket for front seat, L.H. Since December 1959.	2
DM 922-118a	Bracket for front seat, R.H. Since December 1959.	2
DM 922-119	Stop for front seat (R. VI). Since December 1959.	2
DS 932-9a	Stop, nylon, for locking front seat hinge (R. VI).	4
DS 932-76b	Lining for rear squab of front seat. Replaces previous model.	2

NUMBER	DESCRIPTION	No. OFF
DS 932-81a	Hinge pin for front seat.	4
DS 932-82	Thrust pad for locking front seat pivot mechanism (R. VI).	4
DS 932-84	*Spring case for cushion of front seat, padded. Until December 1959. Replaced by DS 932-011b, L.H. or DS 932-011c, R.H. Order in addition: 1-DS 932-153, 1-DS 932-153a, 1-DS 932-156.*	2
DS 932-84a	*Spring case, padded, for cushion of front seat. Since December 1959. Replaced by DS 932-011b, L.H. or DS 932-011c, R.H. Order in addition: 1-DS 932-153, 1-DS 932-153a, 1-DS 932-156.*	2
DS 932-90	*Spring case, padded, for squab of front seat. Replaced by DS 932-011b for L.H. side or DS 932-011c for R.H. side. Order in addition: 1-DS 932-153, 1-DS 932-153a, 1-DS 932-156.*	2
DS 932-99b	Finishing casing, nylon, for front seat pivot mechanism, L.H. (R. VI).	2
DS 932-99c	Finishing casing, nylon, for front seat pivot mechanism, R.H. (R. VI).	2
DS 932-118	Wedge under seat supports.	4
DS 942-73	Socket for securing head-rest (R. VI).	2
DS 942-78	*Head-rest, padded, with sockets and screws. Replaced by DS 942-78a; order in addition: 2-DS 942-73 (R. VI), 4-2.508-S (R. VI).*	1
DS 942-78a	Head-rest, padded, without socket or screws.	1
2.492-S	Screw, raised countersunk head, 4 x 8, for securing the finishing casing on the pivot mechanism (R. VI).	2

NUMBER	DESCRIPTION	No. OFF
2.508-S	Screw, raised countersunk head, 4.85 x 16 (cruciform slot) for securing sockets (R. VI).	4
2.756-S	Screw, round head, 3.5 x 9.5, for securing the finishing casing on spring case on seat (R. VI).	2
	July 1960 — June 1963	
D 334-2	Knob on control lever for squab of front seat (white) (R. VI). Until September 1961.	2
D 912-4a	Lever for locking front seat, 197 mm long. Until September 1962.	2
DM 912-4	Lever for locking front seat. Since September 1962.	2
D 912-10	Knob for locking lever of front seat (R. VI).	2
DS 912-62	Spring case for reinforcement of cushion (R. VI). Since January 1961.	2
D 912-66	Rubber covering for squab (R. VI).	2
D 912-85	Return spring for locking lever.	2
DM 922-118	Bracket, L.H. for front seat.	2
DM 922-118a	Bracket, R.H. for front seat.	2
DM 922-119	Stop for front seat (R. VI). Until September 1962.	2
DS 932-011	*Seat, front, complete, L.H. without covering. Replaced by DS 932-011b; order in addition: 1-DS 932-153, 1-DS 932-153a, 1-DS 932-156.*	1

The numbers underlined indicate new parts which do not appear on the illustration.

NUMBER	DESCRIPTION	No. OFF
DS 932-011a	*Seat, front, complete, R.H. without covering. Replaced by DS 932-011c; order in addition: 1-DS 932-153, 1-DS 932-153a, 1-DS 932-156.*	1
DS 932-24	Control, pivot mechanism, squab, L.H. (R. VI).	1
DS 932-24a	Control, pivot mechanism, squab, R.H. (R. VI).	1
DS 932-76b	Lining for rear squab of front seat.	2
DS 932-79a	Material enclosing the squab of the front seat.	2
DS 932-81b	Pivot for squab of front seat, 87 mm long (R. VI).	4
DS 932-82a	Thrust pad for locking front seat pivot mechanism (R. VI).	4

NUMBER	DESCRIPTION	No. OFF
DS 932-84c	*Spring case for cushion of front seat, padded. Replaced by DS 932-84d; order in addition: 1-DS 932-147, 1-DS 932-149 (R. VI), 1-DS 932-150 (R. VI), 2-DS 932-151, 2-DS 932-152, 1-DS 932-153, 1-DS 932-153a, 1-DS 932-156.*	2
DS 932-90a	Spring case for squab, padded.	2
DS 932-118	Wedge under seat supports (R. VI). Until September 1962.	4
DS 932-119	Return spring for squab, L.H.	2
DS 932-119a	Return spring for squab, R.H.	2
DS 932-130	Pin for locating thrust pad on pivot mechanism (R. VI).	4
DS 932-140	Knob for control lever for squab on front seat (black), (R. VI). Since September 1961.	2
DS 942-73	Socket for securing head-rest (R. VI).	2

NUMBER	DESCRIPTION	No. OFF
DS 942-78	*Head-rest, padded, with sockets and screws. Replaced by DS 942-78a; order in addition: 2-DS 942-73 (R. VI), 4-2.508-S (R. VI).*	1
DS 942-78a	Head-rest, padded, without socket or screws.	1
495-S 30	Screw, hex. head, 7 x 45, for securing bracket (R. III).	4
588-S	Screw, hex. head, 7 x 50, for securing bracket (R. III).	4
2.491-S	Nut, hex., 7 x 100, for locking locating pin (R. III).	4
2.508-S	Screw, raised countersunk head, 4.85 x 16 (cruciform slot), for securing sockets (R. VI).	4
2.610-S	Screw, raised countersunk head, 3.5 x 15, for securing material (R. VI).	8
621.048	Screw, hex. head, for securing stop (R. III). Until September 1962.	2

The numbers underlined indicate new parts which do not appear on the illustration.

NUMBER	DESCRIPTION	No. OFF
	Since June 1963	
A 525-95a	Trunnion for locking control lever cable (R. VI).	4
DS 334-2	Stop for control lever for squab (R. VI). Since September 1963.	2
D 861-136	Return spring for locking lever.	2
D 912-10	Knob on locking lever (R. VI).	2
DS 912-62	Spring case for reinforcement of cushion (R. VI).	2
D 912-66	Lining, rubber, for squab (R. VI).	2
DS 932-011b	Seat, front, complete, L.H. without trimming fabric. Until September 1963. (For squab of rear bench seat, fixed).	1
DS 932-011c	Seat, front, complete, R.H. without trimming fabric. Until September 1963. (For squab of rear bench seat, fixed).	1
DB 932-18	Panel, (bare), for closing front seat squab, R.H. (For squab of rear bench seat folding).	1
DS 932-24b	Control, pivot mechanism, squab, L.H. (R. VI).	1
DS 932-24c	Control, pivot mechanism, squab, R.H. (R. VI).	1
DS 932-76c	Lining (leathercloth) for rear squab of front seat.	2
DB 932-79	Panel (bare) for closing front seat squab, right and left-hand. September 1963 - September 1964. - Left-hand. Since September 1964. (For squab of rear bench seat, folding).	2 1

NUMBER	DESCRIPTION	No. OFF
DB 932-79a	*Panel (bare) for closing front seat squab, right-hand. Since September 1964. (For squab of rear bench seat, folding). Replaced by DB 932-18.*	1
DS 932-79a	Material closing the squab of front seat. Until September 1963. (For squab of rear bench seat, fixed).	2
DS 932-81b	Pivot for squab of front seat, 90 mm long (R. VI).	4
DS 932-82a	Thrust pad for locking front seat pivot mechanism (R. VI).	4
DS 932-84d	Spring case for cushion of front seat, padded.	2
DB 932-90	Spring case, for squab, padded. Since September 1963. (For squab of rear bench seat, folding).	2
DS 932-90a	Spring case for squab, padded. Until September 1963. (For squab of rear bench seat, fixed).	2
DS 932-119	Return spring for squab, L.H.	2
DS 932-119a	Return spring for squab, R.H.	2
DS 932-130	Pin for locating thrust pad on pivot mechanism (R. VI).	4
DM 932-140	Stop for control lever for hinge of squab (R. VI). Until September 1964.	2
DS 932-147	Lever for locking front seat.	2
DS 932-149	Control cable for hinge pin on locking mechanism, 700 mm long (R. VI).	2
DS 932-150	Distance piece under locking lever (R. VI).	2
DS 932-151	Catch for seat locking mechanism.	4

NUMBER	DESCRIPTION	No. OFF
DS 932-152	Return spring for catch on locking mechanism.	4
DS 932-153	Bracket for front seat, L.H.	2
DS 932-153a	Bracket for front seat, R.H. with stop.	2
DS 932-156	Stop, (rear) for front seat. Until October 1964.	2
DS 932-156a	Stop (rear) for front seat. Since October 1964.	2
DS 942-73	Socket for securing head-rest (R. VI).	2
DS 942-78	*Head-rest, padded, with socket and screws. Replaced by DS 942-78a; order in addition: 2-DS 942-73 (R. VI), 4-2.508-S (R. VI).*	1
DS 942-78a	Head-rest, padded, without socket or screws.	1
495-S 30	Screw, hex. head, pointed, 7 x 45, for securing bracket (R. III).	8
2.319-S	Nut, hex., 5 x 75, for securing lever of locking mechanism (R. III).	2
2.482-S	Washer, flat, 7.5 x 14, for screws securing bracket (R. III).	8
2.491-S	Nut, hex., 7 x 100, for locking pin on pivot mechanism (R. VI).	4
2.508-S	Screw, raised countersunk head, 4.85 x 16 (cruciform slot) for securing socket (R. VI).	4
2.610-S	Screw, raised countersunk head, 3.5 x 15, (cruciform slot) for securing closing panel (R. VI).	8
619.133	Washer, flat, 5.25 x 15 x 1.5, for nut securing lever of locking control mechanism (R. VI).	2
619.764	Clip for securing trimming (R. VI).	As nec.
621.048	Screw, hex. head, 5 x 22 for securing stop, rear (R. II).	2

The numbers underlined indicate new parts which do not appear on the illustration.

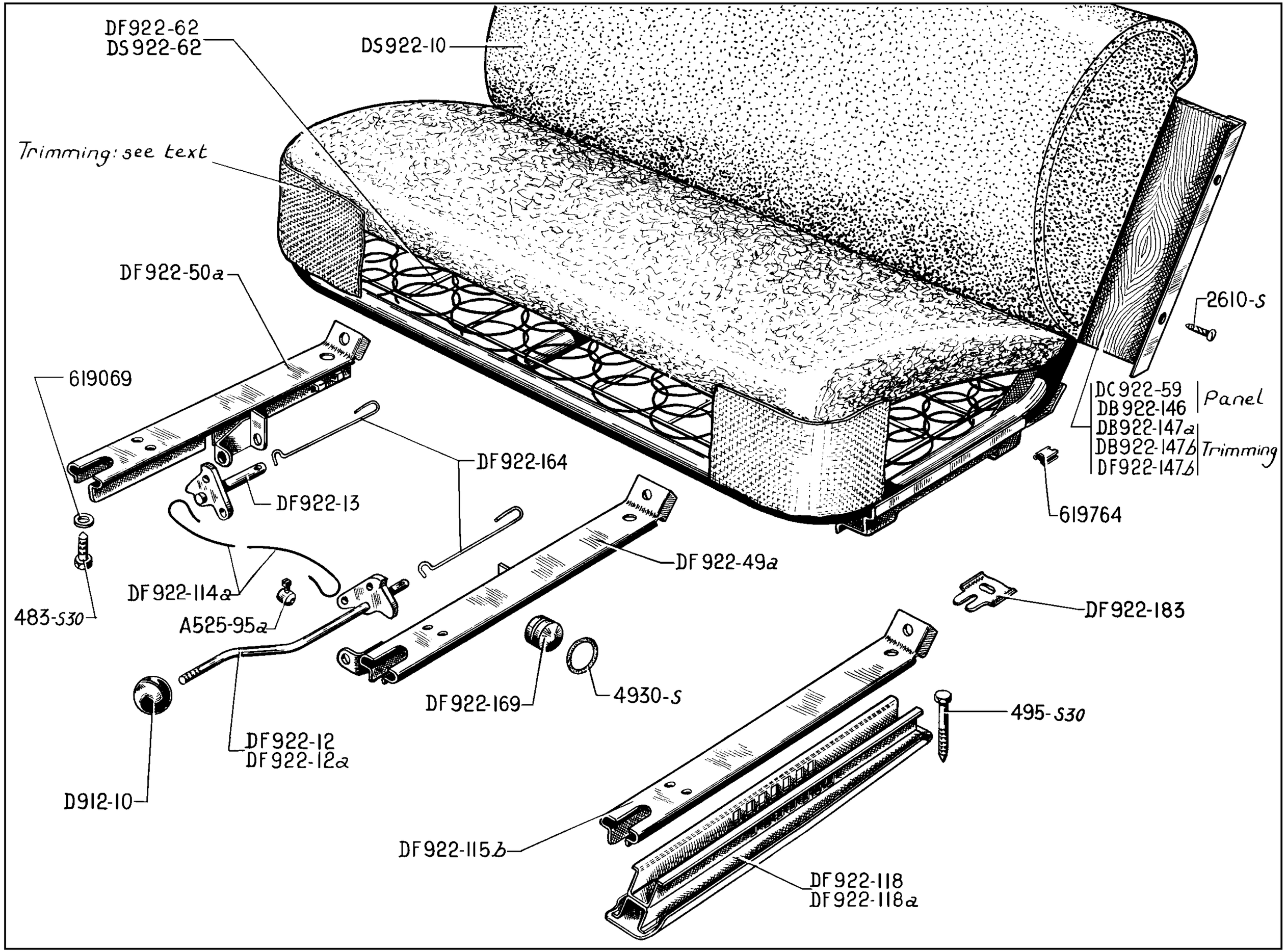
DF922-62
DS922-62
DS922-10
Trimming: see text
DF922-50a
619069
DF922-164
DF922-13
DF922-114a
483-S30
A525-95a
DF922-49a
DF922-169
4930-S
DF922-12
DF922-12a
D912-10
2610-S
DC922-59
DB922-146
Panel
DB922-147a
DB922-147b
DF922-147b
Trimming
619764
DF922-183
495-S30
DF922-115b
DF922-118
DF922-118a

NUMBER	DESCRIPTION	No. OFF
	BREAK, LUXE, COMMERCIAL, FAMILY TYPE	
A 525-95a	Clamps for locking control cable (R. VI).	1
D 912-10	Knob on locking control lever (R. VI).	1
DS 922-10	Cushion (Dunlopillo) for squab on front bench seat (R. VI).	1
DF 922-12	Lever for locking front bench seat, 290 mm long (R. VI). Until September 1962.	1
DF 922-12a	Lever for locking front bench seat, 295 mm long (R. VI). Since September 1962.	1
DF 922-13	Locking pin for front bench seat (R. VI).	1
DF 922-49a	Slide, movable, for front seat, secured at centre (R. VI).	1
DF 922-50a	Slide, movable, for front seat, R.H. (R. VI).	1
DC 922-59	Closing panel, metal, for squab of front bench seat. COMMERCIAL.	1

NUMBER	DESCRIPTION	No. OFF
DF 922-62	*Spring case for front bench seat, padded. FAMILY TYPE. Until October 1961. Replaced by DS 922-62; order in addition: 3-DF 922-118a (R. VI).*	1
DS 922-62	Spring case for front bench seat, padded. All Types. Since October 1961.	1
DF 922-114a	Cable for control of locking mechanism, 80 mm long (R. VI).	1
DF 922-115b	Slide, movable, for front bench seat, L.H. (R. VI).	1
DF 922-118	Support for front bench seat (R. VI). Until September 1962.	3
DF 922-118a	Support for front bench seat (R. VI). Since Sepember 1962.	3
DB 922-146	Panel, bare, for closing squab on front bench seat. Except COMMERCIAL. Until September 1964.	1
DF 922-146	Panel, bare, for closing squab on front bench seat. Except COMMERCIAL. Since September 1964.	1
DB 922-147a	*Trimming (leathercloth, GOLD), for closing panel of squab. Except FAMILY TYPE. No longer supplied.*	1
DB 922-147b	Trimming (leathercloth, RIO), for closing panel of squab. Except FAMILY TYPE.	1

NUMBER	DESCRIPTION	No. OFF
DF 922-147b	Trimming (leathercloth DORIC), for closing panel of squab. FAMILY TYPE. Until September 1964.	1
DF 922-147c	Trimming (leathercloth BAYADERE) for closing panel of squab. FAMILY TYPE. Since September 1964.	1
DF 922-164	Return spring for locking lever, 142 mm long (R. VI).	2
DF 922-169	Roller for slide (R. VI).	6
DF 922-183	Stop, rear, (outer) for front bench seat (R. VI).	2
483-S 30	Screw, hex. head, pointed, 7 x 15, for securing movable slide on front bench seat (R. III).	6
495-S 30	Screw, hex. head, pointed, for securing the support brackets for the front bench seats (R. III).	6
2.610-S	Screw, raised countersunk head, 3.5, for securing closing panel (R. VI).	6
4.930-S	Ring seal, 15.7 x 21.1 x 2.7 for front seat roller (R. VI).	6
619.069	Washer, flat, 7.5 x 20 x 1, for screws securing slide on front seat (R. II).	6
619.764	Clip for securing trimming (R. VI).	As nec.

The numbers underlined indicate new parts which do not appear on the illustration.

NUMBER	DESCRIPTION	No. OFF
	REAR BENCH SEAT, FAMILY TYPE	
DF 922-42	*Spring case padded for rear bench seat. CONFORT. Until October 1964. Replaced by DF 922-42c.*	1
DF 922-42a	*Spring case padded for rear bench seat. LUXE. Until October 1964. Replaced by DF 922-42b.*	1
DF 922-42b	Spring case padded for rear bench seat. LUXE Since October 1964.	1
DF 922-42c	Spring case padded for rear bench seat. CONFORT. Since October 1964.	1
DF 922-135	Sealing plug for securing front bench seat (R. VI).	2
DF 922-178	Closing panel (bare) for squab of rear bench seat.	1
	REAR CUSHION, BREAK, LUXE AND COMMERCIAL	
DB 923-10	Spring case, padded for rear cushion.	1
DB 744-48	Floor, movable, forming base for cushion. Until September 1963.	1
DB 744-48a	Floor, movable, forming base for cushion, lifting handle 69 mm. Since September 1963.	1
2.510-S 30	Screw, raised countersunk head, 5 x 20, for securing the floor (R. VI).	9
	REAR SQUAB (Folding) BREAK, LUXE AND COMMERCIAL	
DB 923-5	*Spring case, padded, for rear squab. Until September 1963. Replaced by DB 923-5b.*	1
DB 923-5b	Spring case, padded for rear squab. Since September 1963.	1
DB 744-49	Floor, movable, forming base of squab	1
2.510-S 30	Screw, raised countersunk head, 5 x 20 for securing the floor (R. VI).	8
	REAR CUSHION, REAR SQUAB (Fixed) BREAK, CONFORT	
DS 941-82	Arm-rest, central, with padding, for rear squab. Until June 1961.	1
DS 941-82a	Arm-rest, central, with padding, for rear squab. Since June 1961.	1
D 923-90a	Spring bush for positioning the cushion (R. VI).	2
DM 923-5c	Spring case, padded, for rear squab. Until September 1963. Replaces earlier type; order in addition: 2-DM 923-128a, 1-DM 923-135a.	1
DS 923-10	Spring case, for rear cushion, padded.	1
DM 923-128a	Hook, lateral, for securing squab. Since September 1963.	2
DM 923-135a	Hook, central, for securing squab. Since September 1963.	1
DB 923-97	Panel, closing, for rear squab. Until September 1963.	1
DB 923-130	Panel, closing, between rear crossmember and squab, L.H. Until September 1963.	1
DB 923-130a	Panel, closing, between rear crossmember and squab, R.H. Until September 1963.	1
DB 923-20	Crossmember for supporting squab (R. VI).	1
135-S	*Screw, round head, 5 x 40, for securing cushion. Replaced by 2.253-S (R. VI).*	2
	REAR CUSHION, REAR SQUAB (Folding) BREAK, CONFORT	
DB 923-5c	Spring case, padded, for rear squab. Since September 1963.	1
DB 923-10b	Spring case, padded, for rear cushion. Since September 1963.	1
DB 744-48b	Floor, movable, forming base of cushion, lifting handle 35 mm. Since September 1963.	1
2.510-S 30	Screw, raised countersunk head, 5 x 20, for securing floor (R. VI).	9
	REAR SEATS AMBULANCE	
DA 932-52	Stay for rear squab, R.H.	1
DS 932-9a	Button for securing stay (R. VI).	2
DA 932-35	Spring case, padded, R.H. for squab.	1
DA 932-36	Spring case, padded, L.H. for squab.	1
DA 932-44	Spring case, padded, R.H. for cushion.	1
DA 932-45	Spring case, padded, L.H. for cushion.	1
DA 744-15	Floor, movable, forming base of squab, L.H.	1
DA 744-16	Floor, movable, forming base of cushion, R.H.	1
DA 744-19	Floor, movable, forming base of cushion, L.H.	1
DA 744-24	Floor, movable, forming base of squab, R.H.	1
	FOLDING SEATS, BREAK	
DB 935-1	Fold-up seat complete (leathercloth RIO).	2
DB 935-1a	Fold-up seat complete (fabric to sample).	2
DB 935-79a	Cushion with trimming (fabric to sample).	2
	FAMILY TYPE	
150.479	Hinge pin for squab (R. IV).	6
DF 935-63	Hinge pin for fold-up seat, on central panel (R. VI).	2
DF 935-62	Bolt (hinge) pivot, for fold-up seat on lateral panel (R. VI).	2
DF 935-64	Panel for lateral fixing of fold-up seat.	2
DF 935-65	Panel for central fixing of fold-up seat.	2
DF 981-64	Lining for fold-up seat (forming carpet).	3
DF 935-1	Fold-up seat complete (cover to sample).	3
D 825-92	Screw, raised countersunk head, 7 x 20 for securing support for cushion.	12
2.510-S 30	Screw, raised countersunk head, 5 x 20, for securing cushion (R. VI).	12
2.548-S 30	Screw, round head, 5 x 16.5, for securing closing panel (R. VI).	12

NUMBER	DESCRIPTION	No. OFF
	BREAK, LUXE	
	Note: Gold leathercloth fabric, string appearance. Until February 1963. No longer supplied.	
DS 922-53	Trim envelope for cushion, front bench seat.	1
DS 922-58	Trim envelope for squab, front bench seat.	1
DF 922-47	Trim envelope for squab, rear bench seat.	1
DF 922-56	Trim envelope for cushion, rear bench seat.	1
	COMMERCIAL STRAW YELLOW LEATHERCLOTH	
DB 922-53c	Trim envelope for cushion, front bench seat.	1
DB 922-58c	Trim envelope for squab, front bench seat.	1
DB 923-2b	Trim envelope for squab, rear bench seat.	1
DB 923-11b	Trim envelope for cushion, rear bench seat.	1

NUMBER	DESCRIPTION	No. OFF
	BREAK, CONFORT	
DS 932-3	Trim envelope for squab, front seat. Until July 1960.	2
DS 932-3a	Trim envelope for squab, front seat. Since July 1960.	2
DS 932-7	Trim envelope for cushion, front seat. Until December 1960.	2
DS 932-7a	Trim envelope for cushion, front seat. Since December 1960.	2
DS 942-6b	Trim envelope for head rest.	1
	REAR SQUAB (Fixed)	
DS 923-2	Trim envelope for squab, rear bench seat, L.H.	1
DS 923-2a	Trim envelope for squab, rear bench seat, R.H.	1
DS 923-11	Trim envelope for cushion, rear bench seat.	1
DS 941-78	Trim envelope for central arm-rest.	1

NUMBER	DESCRIPTION	No. OFF
	REAR SQUAB (Folding)	
DB 923-2d	Trim envelope for squab, rear bench seat. Since September 1963.	1
DB 923-11d	Trim envelope for cushion, rear bench seat. Since September 1963.	1
DB 923-44	Loose cover for protecting cushion. Since September 1963.	1
	FAMILY TYPE	
DS 922-53	Trim envelope for cushion, front bench seat.	1
DS 922-58	Trim envelope for squab, front bench seat.	1
DF 922-47	Trim envelope for squab, rear bench seat.	1
DF 922-56	Trim envelope for cushion, rear bench seat.	1

Note - The trimming for cushions and squabs will only be supplied to sample (cloth and leathercloth) and if available.

NUMBER	DESCRIPTION	No. OFF
	BREAK, CONFORT AND FAMILY TYPE	
	Note - For recovering panels and arm-rest, we supply fabric and leathercloth (by the metre) against sample and subject to availability.	
D 841-57	Tread plate, for protecting bottom of front L.H. door, 523 mm long. (R. VI).	1
D 841-57a	Tread plate, for protecting bottom of front R.H. door, 523 mm long. (R. VI).	1
D 842-56	Tread plate, for protecting bottom of rear L.H. door, 350 mm long. (R. VI).	1
D 842-56a	Tread plate, for protecting bottom of rear R.H. door, 350 mm long. (R. VI).	1
DM 986-95	Trimming, lower, on central pillar, L.H. (R. VI).	1
DM 986-95a	Trimming, lower, on central pillar, R.H. (R. VI).	1
DM 986-100	Trimming, grey leathercloth, finishing for central pillar, upper part, L.H.	1
DM 986-100a	Trimming, grey leathercloth, finishing for central pillar, upper part, R.H.	1
DS 983-10	Embellishing strip for finishing front panel, L.H. (R. VI).	1
DS 983-10a	Embellishing strip for finishing front panel, R.H. (R. VI).	1
DS 983-11	Embellishing strip for finishing rear panel, L.H. (R. VI).	1

NUMBER	DESCRIPTION	No. OFF
DS 983-11a	Embellishing strip for finishing rear panel, R.H. (R. VI).	1
D 941-2	Padding for arm-rest on L.H. front and rear doors (R. VI).	2
D 941-2a	Padding for arm-rest on R.H. front and rear doors (R. VI).	2
D 983-59	Panel (only) without arm-rest for front door, L.H.	1
D 983-71	Panel (only) with arm-rest for rear door, L.H.	1
D 983-71a	Panel (only) with arm-rest for rear door, R.H.	1
D 983-75	Panel (only) with arm-rest for front door, R.H.	1
DS 651-105	Clip for securing map pockets.	8
DS 651-40	Map pockets on panel of front door, L.H.	1
DS 651-40a	Map pockets on panel of front door, R.H.	1
2.499-S	Screw, Parker, 3.5 x 9.5, for securing tread plate at bottom of door (R. VI).	As nec.
	BREAK, LUXE AND COMMERCIAL	
	Note: Gold leathercloth fabric, string appearance. Until February 1963. No longer available.	
DM 941-1	Arm-rest (steel) on rear panel.	2
619.766	Clip for securing panel (R. VI).	40
619.778	Clip for securing panel (R. VI).	4
DS 983-81	Plug, sealing, for panel securing clip (R. VI).	44
DM 941-91	Nut holder for securing arm-rest.	2
2.324-S	Nut, square, 5 x 75, for securing arm-rest (R. III).	2

NUMBER	DESCRIPTION	No. OFF
DB 941-3	Trim for arm-rest on rear panel (leathercloth) grey, or blue leathercloth, indicate colour (LUXE). Since February 1963.	2
DB 941-3a	Trim for arm-rest on rear panel (leathercloth, grey and Rio).	2
DM 986-95	Trimming, lower, on L.H. central pillar (R. VI).	1
DM 986-95a	Trimming, lower, on R.H. central pillar (R. VI).	1
DM 986-100	Trim, finishing (grey leathercloth) for finishing central pillar, upper part, L.H.	1
DM 986-100a	Trim, finishing (grey leathercloth) for finishing central pillar, upper part, R.H.	1
D 983-59	Panel (without fittings) for front door.	2
DM 983-71	Panel (without fittings)for rear door, L.H.	1
DM 983-74	Panel (without fittings) for rear door, R.H.	1
DM 983-1b	Panel (trim leathercloth, grey dimpled) for front door, L.H.	1
DM 983-2b	Panel (trim leathercloth, grey dimpled) for rear door, L.H.	1
DM 983-12b	Panel, trim leathercloth, grey dimpled) for front door, R.H.	1
DM 983-13b	Panel, trim leathercloth, grey dimpled) for rear door, R.H.	1
3.234-S	Washer, cup, 6 mm for screw securing arm-rest (R. VI).	2
2.509-S 30	Screw, raised countersunk head, 5 x 25, for securing arm-rest (R. VI).	2

NUMBER	DESCRIPTION	No. OFF
	CARPETS L.H. STEERING	
	BREAK, LUXE, COMMERCIAL, FAMILY TYPE	
DF 981-1	Carpet, front (rubber). Until September 1962.	1
DF 981-1f	Carpet, front (rubber). Since September 1962.	1
DF 981-2b	Carpet, rear (moquette). FAMILY TYPE.	1
DM 981-2	Carpet, rear (felt). Except FAMILY TYPE. Until September 1962.	1
DM 981-2f	Carpet, rear (felt). Except FAMILY TYPE. Since September 1962.	1
DF 981-6b	Carpet, intermediate (moquette). FAMILY TYPE.	1
	BREAK, CONFORT AND AMBULANCE	
DB 981-1a	Carpet, front (moquette). June 1961 - September 1962.	1
DS 981-1g	Carpet, front (moquette). Since September 1962.	1
DS 981-2a	Carpet, rear (moquette). June 1961 - September 1962.	1

NUMBER	DESCRIPTION	No. OFF
DS 981-2e	Carpet, rear (moquette). Since September 1962.	1
DS 982-58b	*Covering for floor under carpet, rear. Since September 1962. Replaces previous model. Replaced by DS 982-58c.*	1
DS 982-58c	Covering for floor under rear carpet.	1
DS 982-81b	Covering for floor under carpet, front.	1
	CARPETS R.H. STEERING	
	BREAK, LUXE, COMMERCIAL, FAMILY TYPE	
DF 981-1c	Carpet, front. Until November 1963.	1
DM 981-1y	Carpet, front, (rubber). Since November 1963.	1
DF 981-2b	Carpet, rear (moquette). FAMILY TYPE.	1
DM 981-2	Carpet, rear (felt). Except FAMILY TYPE. Until September 1962.	1
DM 981-2f	Carpet, rear (felt). Except FAMILY TYPE. Since September 1962.	1
DF 981-6b	Carpet, intermediate, (moquette). FAMILY TYPE.	1
DS 982-58b	*Covering for floor under carpet, rear. Since September 1962. Replaces previous model. Replaced by DS 982-58c.*	1
DS 982-58c	Covering for floor under rear carpet.	1
DS 982-81b	Covering for floor under carpet, front.	1

NUMBER	DESCRIPTION	No. OFF
	BREAK, CONFORT AND AMBULANCE	
DF 981-1c	Carpet, front, (moquette). Until September 1962.	1
DM 981-1v	Carpet, front, (moquette). Since September 1962.	1
DS 981-2a	*Carpet, rear, (moquette). June 1961 - September 1962. Replaced by DS 981-2e.*	1
DS 981-2e	Carpet, rear, (moquette). Since September 1962.	1
DS 982-58b	*Covering for floor under carpet, rear. Since September 1962. Replaces earlier type. Replaced by DS 982-58c.*	1
DS 982-58c	Covering for floor under rear carpet.	1
DS 982-81b	Covering for floor under carpet, front.	1
	FIXING	
DS 981-146	Clip, male, and plate assembly for securing carpet. Since June 1961.	6
613.158	Clip for ball catch (R. VI). Until June 1961.	6
613.159	Ball catch for securing carpet (R. VI). Until June 1961.	6
DS 981-115	*Clip, male, for securing carpet. Until June 1961. Replaced by DS 981-146.*	6

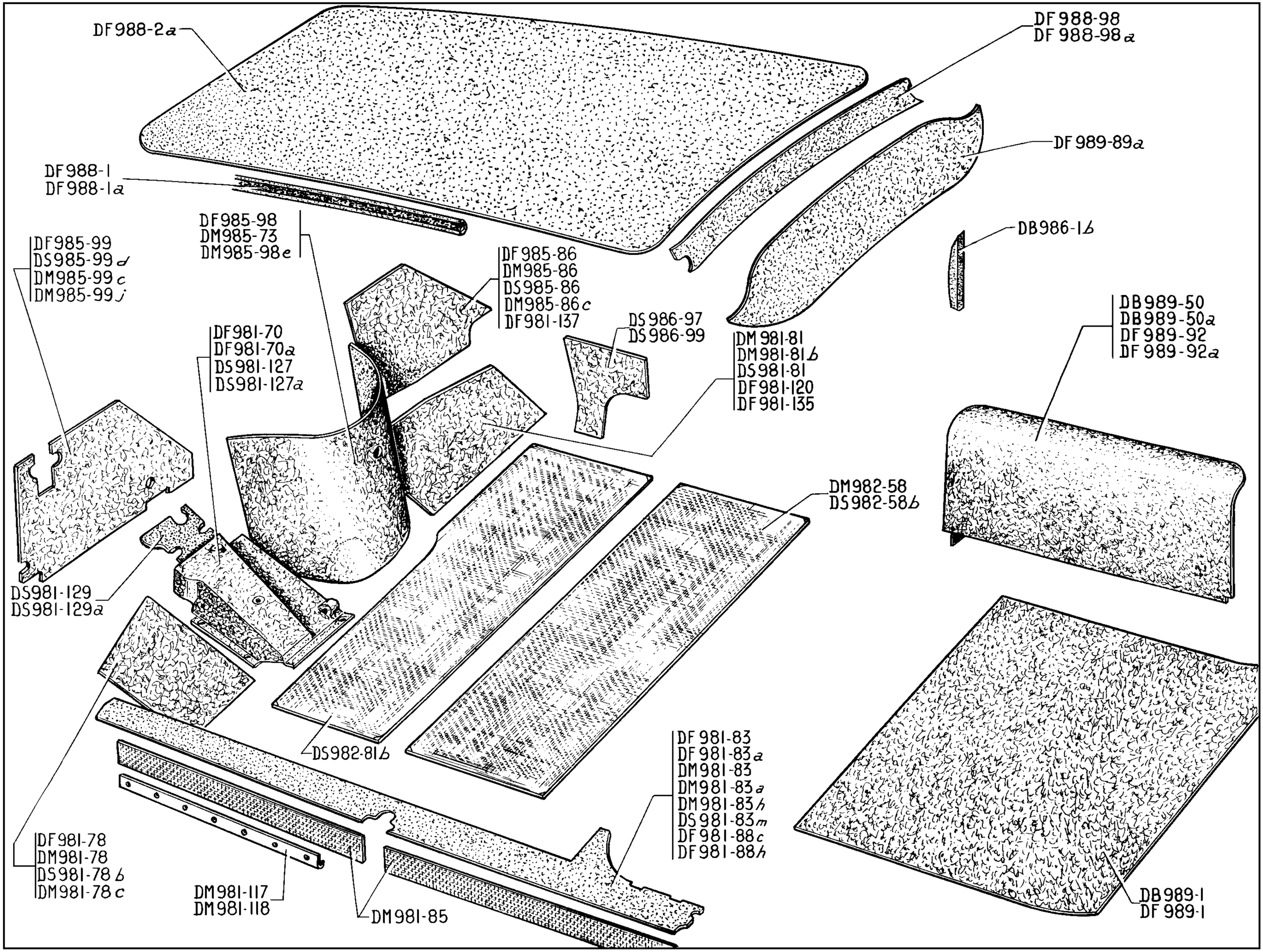
DF988-2a
DF988-98
DF988-98a
DF989-89a
DF988-1
DF988-1a
DB986-1b
DF985-98
DM985-73
DM985-98e
DF985-99
DS985-99d
DM985-99c
DM985-99j
DF985-86
DM985-86
DS985-86
DM985-86c
DF981-137
DS986-97
DS986-99
DB989-50
DB989-50a
DF989-92
DF989-92a
DF981-70
DF981-70a
DS981-127
DS981-127a
DM981-81
DM981-81b
DS981-81
DF981-120
DF981-135
DM982-58
DS982-58b
DS981-129
DS981-129a
DS982-81b
DF981-83
DF981-83a
DM981-83
DM981-83a
DM981-83h
DS981-83m
DF981-88c
DF981-88h
DF981-78
DM981-78
DS981-78b
DM981-78c
DM981-117
DM981-118
DM981-85
DB989-1
DF989-1

NUMBER	DESCRIPTION	No. OFF
	ROOF	
DF 988-1	*Rubber finishing, interior of roof, 5470 mm long (R. VI). Until September 1962. Replaced by DF 988-1a.*	1
DF 988-1a	Rubber finishing, interior of roof, 5470 mm long (R. VI). Since September 1962.	1
DF 988-2a	Trimming, anti-rattle, for roof (grey beige). Since December 1960.	1
	SCUTTLE Until September 1962	
DF 981-70	Trim for brake pedal flooring.	1
DF 981-78	Finishing panel for scuttle panel, lower L.H. part.	1
DM 981-81	*Finishing panel for scuttle panel. Lower R.H. part. Replaced by DS 981-81.*	1
DF 981-83	*Finishing panel for R.H. side-member and bottom side-rail of body. FAMILY TYPE. Replaced by DF 981-88h; order in addition: 2-DM 981-85.*	1
DF 981-83a	*Finishing panel for L.H. side-member and bottom side-rail of body. FAMILY TYPE. Replaced by DF 981-88c; order in addition: 2-DM 981-85.*	1
DM 981-83	*Finishing panel for L.H. side-member and bottom side-rail of body. EXCEPT FAMILY TYPE. Replaced by DS 981-44e; order in addition: 2-DM 981-85.*	1
DM 981-83a	*Finishing panel for R.H. side-member and bottom side-rail of body. EXCEPT FAMILY TYPE. Replaced by DS 981-44f; order in addition: 2-DM 981-85.*	1

NUMBER	DESCRIPTION	No. OFF
DM 985-86	Finishing plate for scuttle panel, upper R.H. part.	1
DF 985-98	Finishing plate, centre, for engine housing.	1
DF 985-99	Finishing plate for scuttle panel, upper L.H. part.	1
	Since September 1962	
DS 981-44e	Trimming (felt) for sidemember and bottom siderail of body, left-hand. Except FAMILY TYPE. Since January 1965.	1
DS 981-44f	Trimming (felt) for sidemember and bottom siderail of body, right-hand. Except FAMILY TYPE. Since January 1965.	1
DS 981-78b	Finishing panel for scuttle panel, lower L.H. part.	1
DS 981-81	Finishing panel for scuttle panel, lower R.H. part.	1
DM 981-83h	*Finishing panel for L.H. side-member and bottom siderail of body. EXCEPT FAMILY TYPE. Until January 1965. Replaced by DS 981-44e.*	1
DS 981-83m	*Finishing panel for R.H. side-member and bottom siderail of body. EXCEPT FAMILY TYPE. Until January 1965. Replaced by DS 981-44f.*	1
DM 981-85	Trimming (appearance Aluminium) for bottom rail of doors.	4
DF 981-88c	Finishing panel for R.H. side-member and bottom siderail of body. FAMILY TYPE.	1
DF 981-88h	Finishing panel for L.H. side-member and bottom siderail of body. FAMILY TYPE.	1
DM 981-117	Finishing strip for door rail, front.	2
DM 981-118	Finishing strip for door rail, rear.	2
DS 981-127	Trim for brake pedal flooring (R.VI).	1
DS 981-129	Felt, anti-rattle, for brake pedal flooring.	1

NUMBER	DESCRIPTION	No. OFF
DM 985-73	*Finishing plate, centre, for engine housing. Until July 1963. Replaced by DM 985-73c.*	1
DM 985-73c	Finishing plate, centre, for engine housing. Since July 1963.	1
DS 985-86	Finishing plate for scuttle panel, upper R.H. part.	1
DS 985-99d	Finishing plate for scuttle panel, upper L.H. part.	1
DS 986-97	Trimming for side plate, scuttle dome, R.H.	1
DS 986-99	Trimming for side plate, scuttle dome, L.H.	1
	UPPER DOOR — REAR	
DB 986-1b	Padding, protective, on quarter panel lining (grey).	1
DF 988-98	Trimming for rear upper cross-member. Until December 1960.	1
DF 988-98a	Trimming for rear upper cross-member (R.VI). Since December 1960.	1
DF 989-89a	Trimming for upper door, rear (grey-beige).	1
	FLOOR	
DS 981-48	*Covering (felt) for crossmember under front seat. Until January 1965. Replaced by DS 981-48c.*	1
DS 981-48c	Covering (felt) for crossmember under front seats. Since January 1965.	1
DM 982-58	*Covering for floor under carpet, rear. Until September 1962. Replaced by DS 982-58c.*	1
DS 982-58b	*Covering for floor under carpet, rear. Since September 1962. Replaced by DS 982-58c.*	1
DS 982-58c	Covering for floor under carpet, rear.	1
DS 982-81b	Covering for floor under carpet, front.	1

The numbers underlined indicate new parts which do not appear on the illustration.

NUMBER	DESCRIPTION	No. OFF
	REAR BOOT	
DB 989-1	Lining for floor of boot. EXCEPT FAMILY TYPE.	1
DF 989-1	Lining for floor of boot. FAMILY TYPE.	1
DB 989-50	Lining over L.H. wheel arch. EXCEPT FAMILY TYPE.	1
DB 989-50a	Lining over R.H. wheel arch. EXCEPT FAMILY TYPE.	1
DF 989-92	Lining over L.H. wheel arch. FAMILY TYPE.	1
DF 989-92a	Lining over R.H. wheel arch. FAMILY TYPE.	1

NUMBER	DESCRIPTION	No. OFF
	SPECIAL TRIMMINGS	
	R.H. STEERING	
	SCUTTLE	
	Until September 1962	
DF 981-70a	Trim for brake pedal flooring.	1
DM 981-78	Finishing panel for scuttle panel, lower L.H. part.	1
DF 981-120	Finishing panel for scuttle panel, lower R.H. part (lateral L.H. part).	1
DF 981-135	Finishing panel for scuttle panel, lower R.H. part (lateral R.H. part).	1
DF 981-137	Trimming for upper panel, L.H.	1
DF 985-86	Trimming for scuttle, upper part, R.H.	1
DM 985-98e	Finishing plate, centre, for engine housing.	1
DM 985-99c	Trimming for scuttle, upper part, L.H.	1

NUMBER	DESCRIPTION	No. OFF
	Since September 1962	
DM 981-78c	Trimming for scuttle, lower part, L.H.	1
DM 981-81b	Trimming for scuttle, lower part, R.H.	1
DS 981-127a	Trim for brake pedal flooring.	1
DS 981-129a	Felt, anti-rattle, for brake pedal flooring.	1
DM 985-86c	Trimming for scuttle, upper part, R.H.	1
DM 985-99j	Trimming for scuttle, upper part, L.H.	1